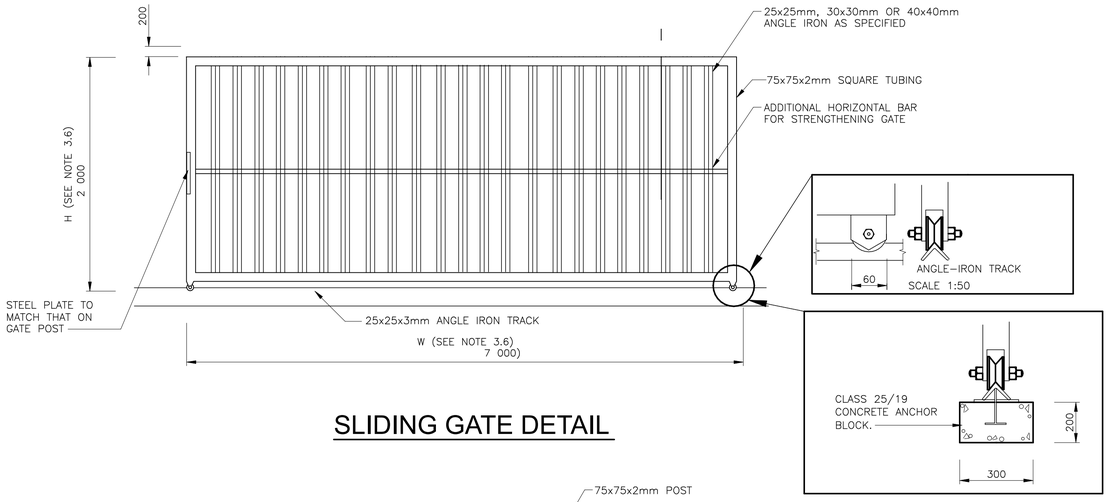

SLIDING GATE DETAIL

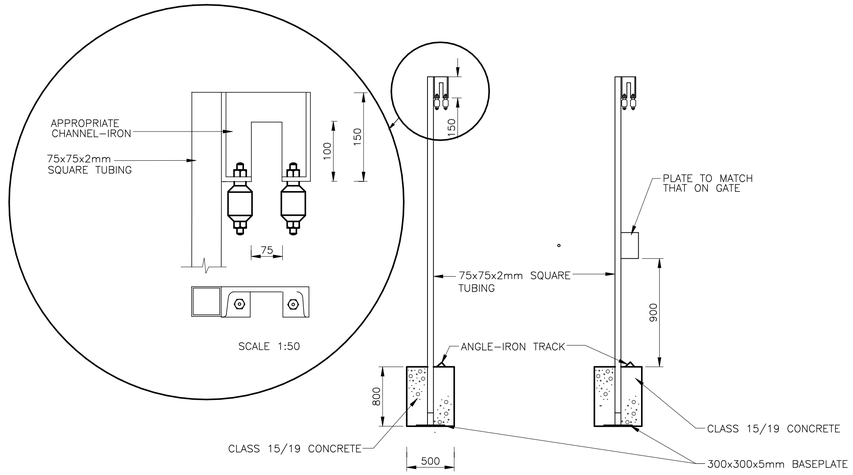

GATEPOSTS FOR SLIDING GATE DETAIL

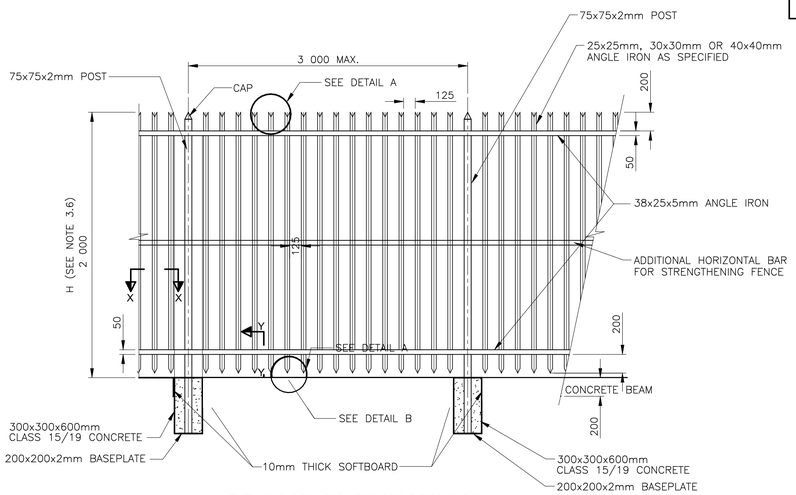

FRONT ELEVEATION

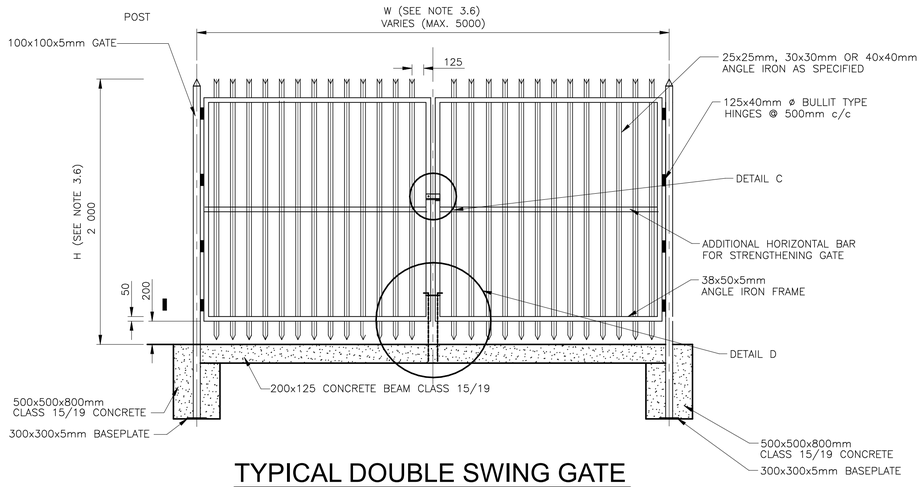

TYPICAL DOUBLE SWING GATE

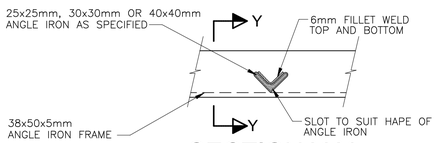

SECTION X-X

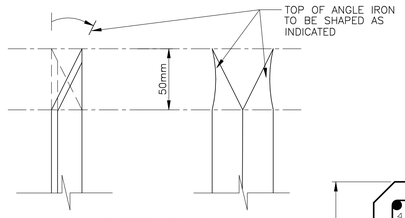

DETAIL A

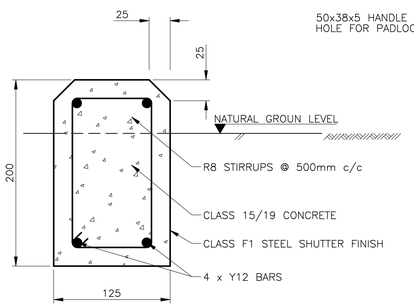

TYPICAL SECTION THROUGH CONCRETE BEAM

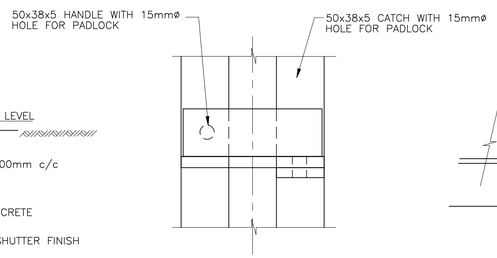

DETAIL C
(FRONT ELEVATION)

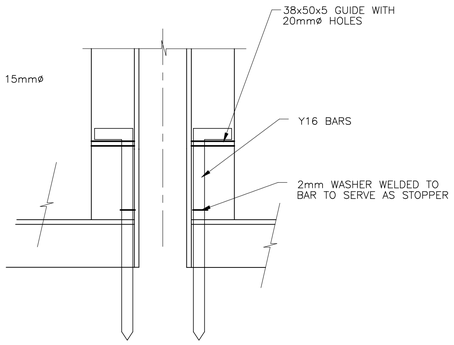

DETAIL D
(BACK ELEVATION)

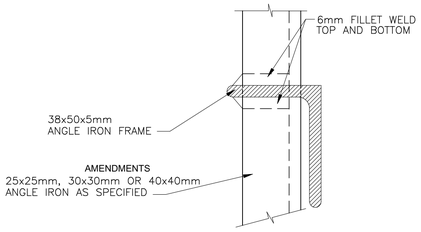

SECTION Y-Y

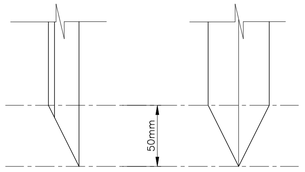

DETAIL B

DRAWING COMPLIED

LOCATION OF PROJECT:

FOR TENDER

THIS DRAWING IS TO BE READ IN CONJUNCTION WITH ALL RELEVANT ARCHITECT'S AND ENGINEER'S DRAWING.

ALL DIMENSIONS, LEVELS, ETC ARE TO BE CHECKED BEFORE ANY WORK IS COMMENCED AND ANY DICREPANCIES NOTED TO BE BROUGHT TO THE ARCHITECT'S ATTENTION.

ONLY FIGURED DIMENSIONS TO BE USED, SCALING OF DRAWINGS IS NOT ADVISABLE.

ALL RIGHTS RESERVED. NO PART OF THIS DESIGN SHALL BE REPRODUCED, USED ELSEWHERE AND/ OR IN ANY WAY WITHOUT PRIOR PERMISSION FROM THE ARCHITECT/ ENGINEER.

GEOTECH INFORMATION

SOIL TYPE:

ASSUMED SOIL BEARING CAPACITY:

RECOMMENDED FOUNDATION TYPE:

RECOMMENDED FOUNDATION DEPTH:

REVISION INFORMATION

REV. NO	DATE	DESCRIPTION

THE MVULA TRUST APPROVAL

Name:.....

Signature:.....Date:.....

LIMPOPO DEPT EDUCATION APPROVAL

Name:.....

Signature:.....Date:.....

PRINCIPAL AGENT APPROVAL

Name:.....

Signature:.....Date:.....

DISCIPLINE :

ARCHITECTURE

BUILDING CLASSIFICATION

C3 : PLACE OF INSTRUCTION (SCHOOL)

CLIENT :

LIMPOPO PROVINCIAL GOVERNMENT REPUBLIC OF SOUTH AFRICA

DEPARTMENT OF EDUCATION

Physical : Cnr 113 Biccard & 24 Excelsior Street Polokwane, 0700

Tel : 015 290 9301 / 7600

Postal : Private Bag X9489, Polokwane, 0700

PRINCIPAL AGENT : SIST CONSORTIUM

SIST ENGINEERS SIMPLE INNOVATIVE SOLUTIONS ON TIME

PHYSICAL : Farm Pal 681 Portion 45 Polokwane, 0699

TEL : 031 065 1099

EMAIL : Tau@sistengineers.co.za

NAME OF COMPETENT PERSON: | **CONT NO:** | **FIRM REG NO:**

IMPLEMENTING AGENT :

THE MVULA TRUST A leading developmental NGO

718 James Crescent, Halfway House, Midrand, 1685, South Africa

Send Us Mail info@themvulatrust.org.za

Call Us +27 11 403 3425

PROJECT NAME

PROPOSED PERMANENT SANITATION FACILITIES FOR NTSEDZENI SECONDARY SCHOOL EMIS 930361088

DRAWING DESCRIPTION

GENERAL

PALISADE FENCE DETAIL

PROJECT STATUS

STAGE 1-3		STAGE 4		STAGE 5-6
CONCEPT	X	TENDER	●	CONSTRUCTION

DESCRIPTION: WATER AND SANITATION PROGRAMME

SCALE: AS SHOWN

DRAWN:	CHECKED:
NAME OF COMPETENT PERSON: MPENDULO SHANGASE	NAME OF COMPETENT PERSON: SIYABONGA MANYONI
REG NO: PrArchST 24751103	REG NO: PrArch 49324416
SIGNATURE:	SIGNATURE:

PROJECT NUMBER: ADD17-BATCH06/TMT/LDOE/LP/21/6 CLUSTER 01

DATE: 02-11-2022

OCCUPANCY CLASSIFICATION: C3

DWG NO: NTSSS - ARCH - 400

REV NO: 1