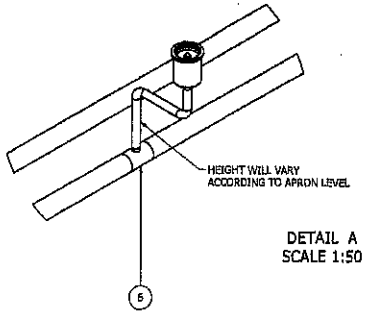

DETAIL A
SCALE 1:50

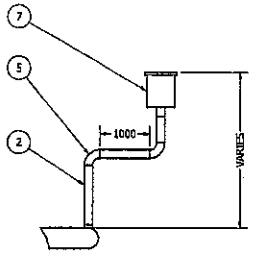

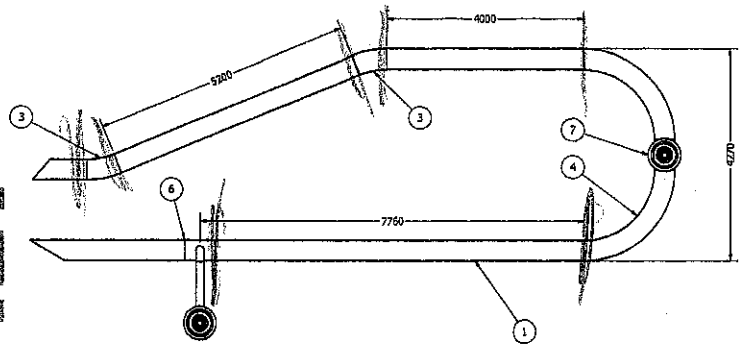

DETAIL B
SCALE 1:50

AS BUILT

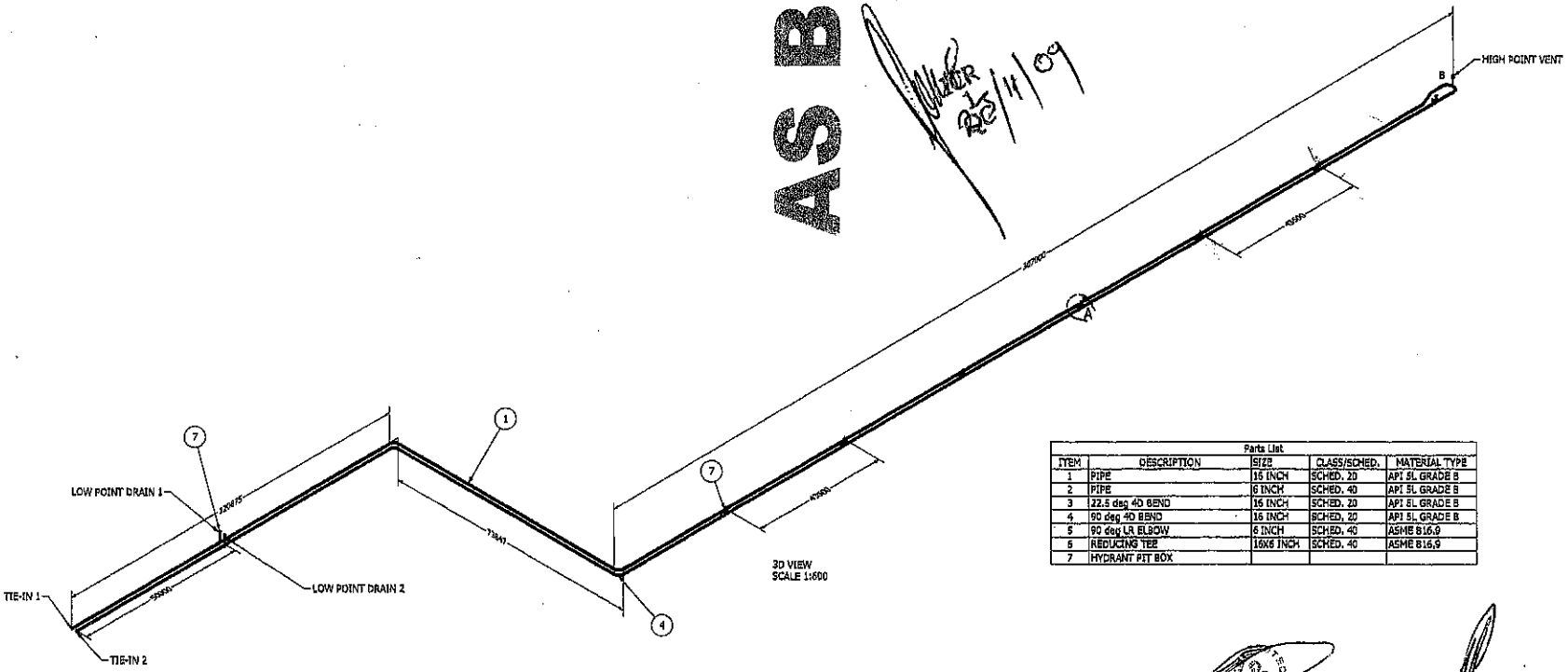

3D VIEW
SCALE 1:600

Parts List				
ITEM	DESCRIPTION	SIZE	CLASS/SCHED.	MATERIAL TYPE
1	PIPE	16 INCH	SCHED. 20	API 5L GRADE B
2	PIPE	6 INCH	SCHED. 40	API 5L GRADE B
3	22.5 deg 40 BEND	16 INCH	SCHED. 20	API 5L GRADE B
4	90 deg 40 BEND	16 INCH	SCHED. 20	API 5L GRADE B
5	90 deg LR ELBOW	6 INCH	SCHED. 40	ASME B16.9
6	REDUCING TEE	16X6 INCH	SCHED. 40	ASME B16.9
7	HYDRANT PIT BOX			

Notes:

No	REVISIONS	DR	APP	DATE
2	22.5° BEND REMOVE LOW POINTS	HC	EP	08/08
1	PIT BOX FEEDER CONFIG.	HC	EP	04/09

ACSA

Consulting Civil and Structural Engineers
& Project Manager

P.O 68988
Highveld
Centurion
0169

Tel: +2712 662 8140
Fax: +2712 665 1412
e-mail: info@vglico.za

Project
ACSA REMOTE APRONS ORTIA
GOLF APRON STANDS

Drawing title
LAYOUT DRAWING

Scale
AS SHOWN

Date
01/2009

Drawn: EP	Plan: HC
Checked: JSMV	Date: 01/2009
Project No: 880	

880-C/A1-208 rev 02