CENTLEC (Pty) Ltd

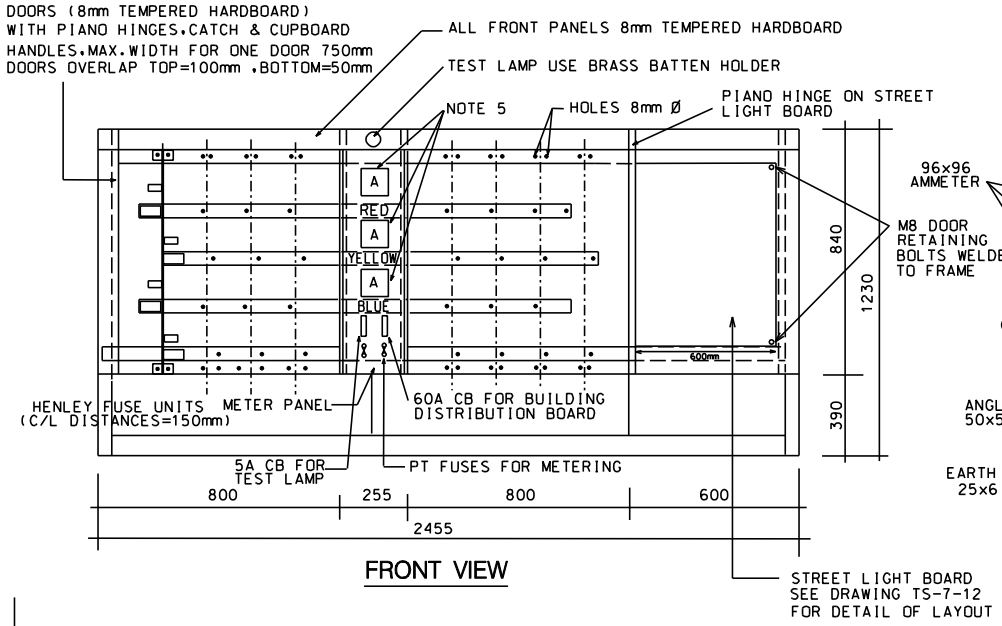

FRONT VIEW

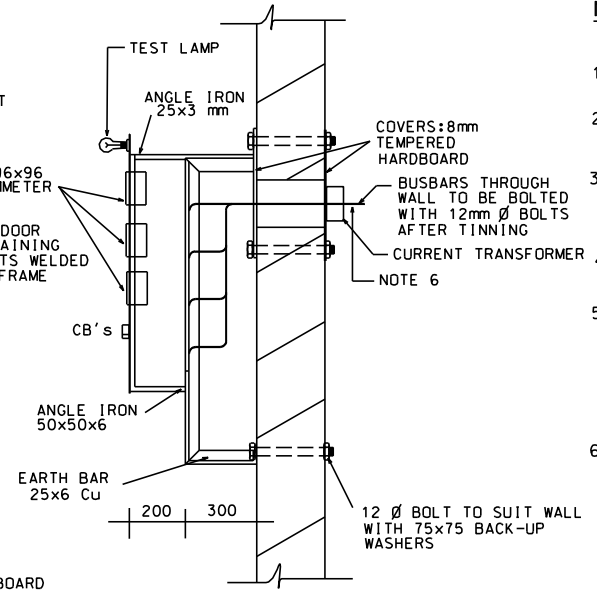

SECTION AA

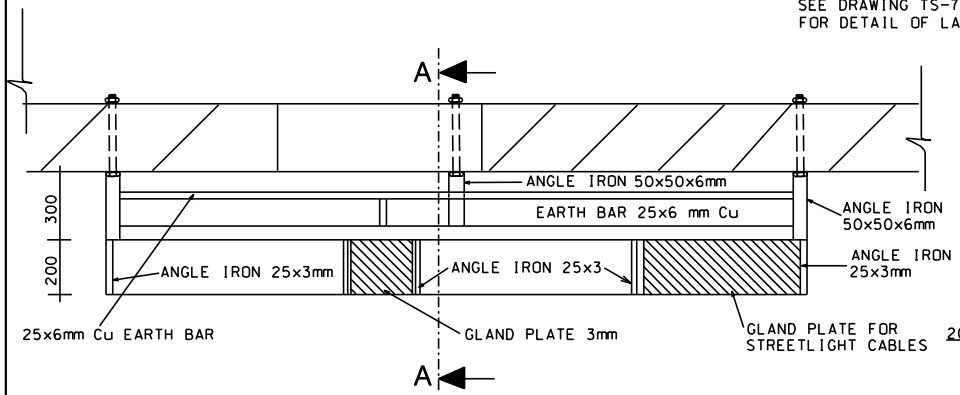

PLAN

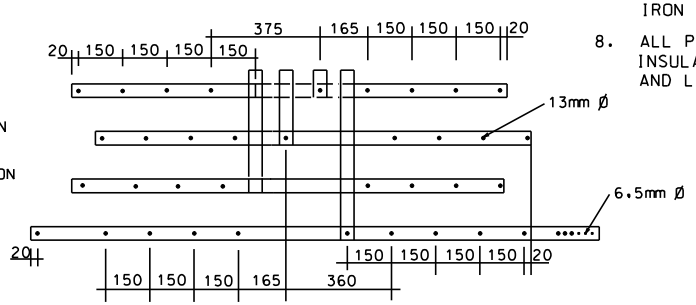

DETAIL "BUSBARS"

NOTES :

1. ALL MEASUREMENTS IN mm.
2. ALL CONNECTING SURFACES ON BUSBARS TO BE TINNED.
3. INSULATE PHASE BUSBARS BETWEEN CONNECTING SURFACES WITH COLOUR CODED LOW TENSION HEAT-SHRINK TUBING BEFORE HENLEY UNITS ARE FITTED.
4. ALL HOLES IN BUSBARS TO BE 13mm Ø AND BOLTED WITH 12mm Ø ANODISED STEEL BOLTS.
5. THREE 5 AMP MOVING-IRON MAXIMUM DEMAND AMPERE METERS (96x96mm) TO BE FITTED AND CONNECTED TO THREE 5A/10VA CLASS CURRENT TRANSFORMER MEASURING TOTAL LV CURRENT OF TRANSFORMER. AMMETER TO BE SCALED 120% OF TRANSFORMER RATING.
6. BUSBARS: INSTALL 50x6mm Cu BUSBARS N LV BOARDS FOR SUBSTATIONS WITH TRANSFORMERS UP TO AND INCLUDING 500kVA. FOR SUBSTATIONS WITH TRANSFORMERS LARGER THAN 500kVA. UP TO 1MVA USE 80x10mm Cu BUSBAR (PHASE CONDUCTOS ONLY). CLEAN PAINTED STEEL AREA AND BOLT NEUTRAL BUSBAR TO BOTH SIDES OF STEEL FRAME. USE ONLY 12mm Ø ANODIZED STEEL BOLTS AND NUTS WITH SPRING AND FLAT WASHERS TO INSTALL BUSBARS AND FUSE UNITS AND TIGHTEN ALL NUTS TO 55Nm.
7. SEE DRAWING TS-6-27 FOR DETAIL OF ANGLE IRON FRAME.
8. ALL PHASE CONNECTIONS AND BUSBARS MUST FULLY INSULATED BETWEEN THE TRANSFORMER BUSHINGS AND LV BOARD.

REVISION DATE : 2004 / 03 / 26

CENTLEC (Pty) Ltd
Reg No 2003/016127/07
PRIVATE BAG X14, BRANDHOF 9324
Tel: 051 - 4092238 Fax: 051 - 4092388

DESIGNED / ONTWERP	DATE / DATUM	FIRST DRG. MAN / EERSTE TEKENAAR	CHECKED / NAGESIEN	UTILIZATION / BENUTTING	REGIONAL SERVICES / STREEKS-DIENSTE	TITLE / TITEL
P.NIEMAN	24-10-2001	A C DE WET		B.DE JAGER	X.FAKU	L.T. DISTRIBUTION BOARD FOR 11kV SUBSTATIONS.
DRAWN / GETEKEN	SCALE / SKAAL	CHECKED / NAGESIEN	DESIGN & DEVELOPMENT / ONTWERP & ONTWIKKELING	CUSTOMER SERVICES / KLIENTEDIENS	EXECUTIVE MANAGER ENGINEERING / UITVOERENDE BESTUURDER INGENIEURSWESE	DRAWING Nr. / TEKENING No. / REV. / VERWYS.
F.B.FOURIE	NTS		A.MGOQI	K V/D BERG	L KRITZINGER	TS - 6 - 3 / Ø

THE C.A.D. REFERENCE NUMBER IS: TS-6-3

A4 SHEET