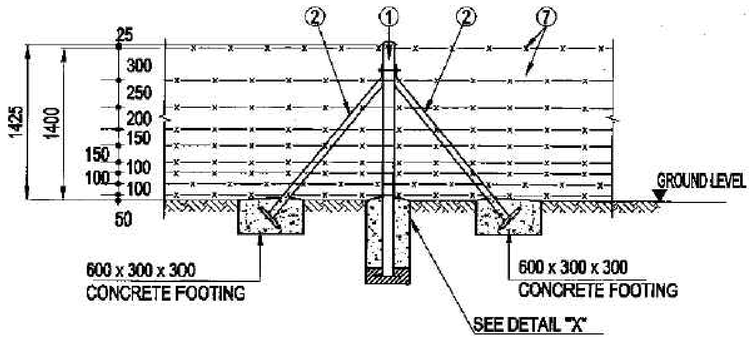

STRAINING POST DETAIL

SCALE 1:50

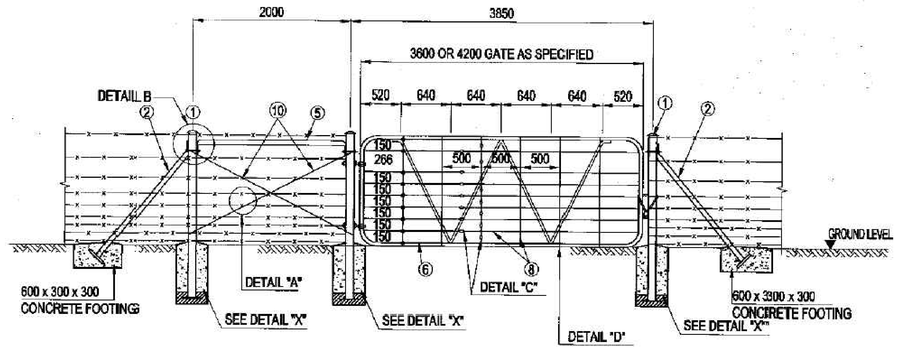

IFENCE AND STRAINING POST DETAIL AT GATE

SCALE 1:50

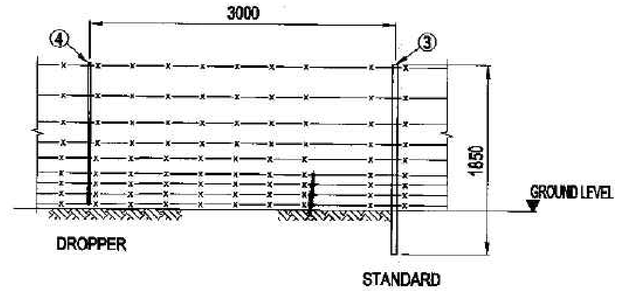

STANDARDS AND DROPPERS

SCALE 1:50

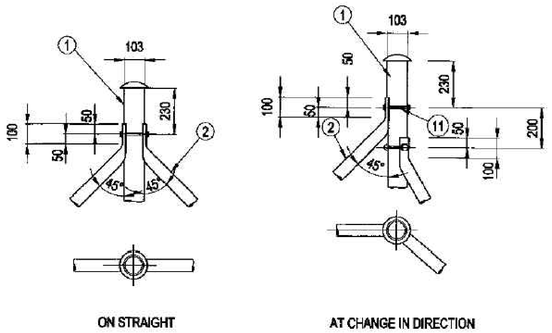

DETAIL OF STRAINING POSTS

SCALE 1:20

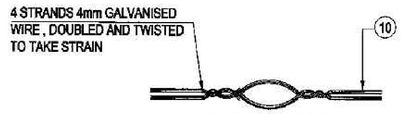

DETAIL "A"

N.T.S

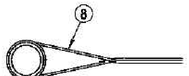

DETAIL "D"

N.T.S

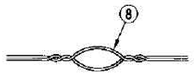

DETAIL "C"

N.T.S

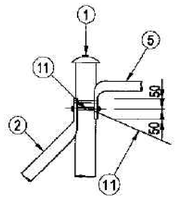

DETAIL B

SCALE 1:20

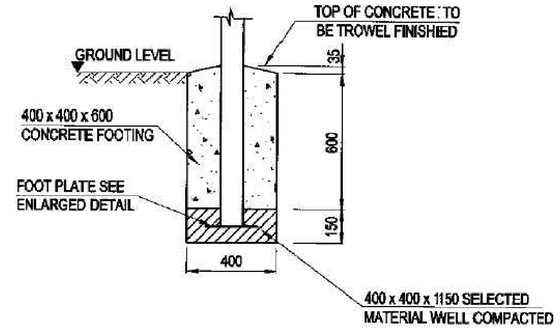

DETAILS OF POST FOOTINGS - DETAIL "X"
400 x 400 x 600

SCALE 1:20

NOTES

1. POSTS:
   2130 X 100 Ø X 3mm MILD STEEL TUBING WITH STEEL CAP AND 230 X 230 X 3mm BASE PLATE, FULLY GALVANIZED (SANS 121/ISO 1461) (WITHOUT HOLES FOR WIRES).
2. STAYS:
   2130 X 60 Ø X 3mm MILD STEEL TUBING WITH 230 X 230 X 3mm BASE PLATE, FULLY GALVANIZED (SANS 121/ISO1461).
3. STANDARDS:
   1850 X 2,5 kg/m "Y" SECTION COMPLETE WITH HOLES AT 50mm CENTRES. FULLY GALVANIZED (SANS 121/ISO1461) IF WITHIN 25 km FROM THE COAST.
4. DROPPERS:
   1200 X 0,56mm kg/m RIDGEBACK PATTERN (SANS 121/ISO1461), FULLY GALVANIZED IF WITHIN 25km FROM THE COAST.
5. CROSS BRACE SUPPORT :
   2400 X 60 Ø X 3mm MILD STEEL TUBING BENT AND FLATTENED AS SHOWN, FULLY GALVANIZED (SANS 121/ISO 1461). ENDS PRESSED FLAT TO ± 8mm.

COMPLYING WITH CKS 82

6. GOVERNMENT PATTERN FARM GATE :
   MANUFACTURED FROM 42.9 Ø x 2.6mm STEEL TUBING WITH HINGES, WASHERS, BOLTS AND LOCKING CHAIN ATTACHED TO GATE (COMPLYING WITH CKS 146).
   ALL FULLY GALVANIZED (SANS 121/ISO 1461).
7. BARBED WIRE:
   3,2 X 2,5mm OVAL HIGH TENSILE GRADE SINGLE STRAND (SANS 675), FULLY GALVANISED.
8. SMOOTH WIRE:
   3,0mm Ø HIGH TENSILE GRADE (SANS 675) FULLY GALVANIZED.
9. TYING WIRE:
   2,5mm Ø MILD STEEL (SANS 675), FULLY GALVANIZED FOR TYING TO STANDARDS AND DROPPERS.
10. STRAINING WIRE :
    4mm Ø MILD STEEL (SANS 675), FULLY GALVANIZED . (4 STRANDS, DOUBLED AND TWISTED TO TAKE STRAIN).
11. BOLTS FOR STAYS:
    12mm Ø MILD STEEL , INCLUDING NUTS AND WASHERS, FULLY GALVANIZED.
12. MAXIMUM SPACING OF:
    STRAINING POSTS 180m c/c
    STANDARDS 15m c/c
    DROPPERS 3m c/c
13. ALL WIRES TO BE ERECTED ON THE ROAD SIDE OF THE FENCE UNLESS OTHERWISE INSTRUCTED.
14. MINIMUM CONCRETE STRENGTH OF FOOTINGS 20 MPa AT 28 DAYS.

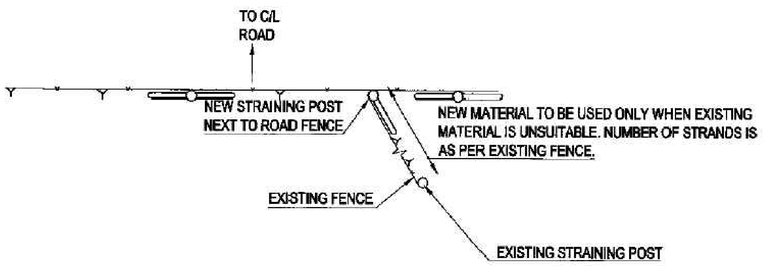

FENCING IN RELATION TO ROAD AND REPAIR OF EXISTING FENCE IF CUT BY ROAD RESERVE

SCALE 1:100

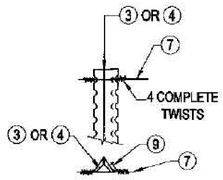

STANDARDS AND DROPPERS

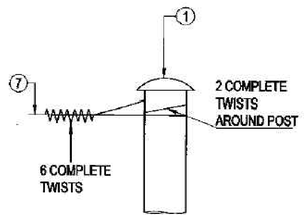

STRAINING POSTS

FASTENIING OF BARBED WIRE TO STANDARDS, DROPPERS AND POSTS

SCALE 1:10

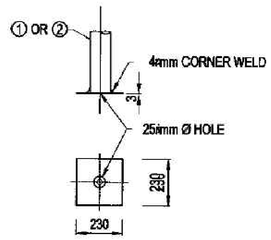

DETAIL OF FOOT PLATE

SCALE 1:20

0 5 10 15 20 25 30 35 40 45 50m

100mm on ORIGINAL PLAN

FOR TENDER ONLY

No.	DATE	REVISION	CONSULT. ENG.
V1		ORIGINAL VERSION	

CONSTRUCTION RECORD (AS-BUILT)
WORKS CONTRACT ENGINEER
Name :
Prof. Reg. No. :
Date :
SANRAL PROJECT MANAGER
Name :
Date :

DESIGNED BY — NAME — Prof. Reg. No.
CHECKED BY — NAME — Prof. Reg. No.
DRAWN BY — NAME

CONSULTANT APPROVAL
Name :
Prof. Reg. No. :
Date :

HEAD OFFICE
48 Tambotie Avenue
Val de Grace
Pretoria
0184

PO Box 415
Pretoria 0001
South Africa

Tel: (012) 844 8000

SANRAL
SOUTH AFRICAN NATIONAL ROADS AGENCY SOC LTD
BUILDING SOUTH AFRICA THROUGH BETTER ROADS

EASTERN REGION
58 Van Eck Place
Mkondeni
Pietermaritzburg
3212

P.O Box 100410
Scottsville
3209

Tel: (033) 392 8100

ACCEPTANCE

THIS ACCEPTANCE IS FOR PROCEDURAL AND ADMINISTRATIVE REVIEW PURPOSES ONLY AND DOES NOT ATTRACT LEGAL LIABILITY OR LIABILITY OF ANY KIND FROM WHATSOEVER CAUSE OR HOWEVER ARISING

for the SA NATIONAL ROADS AGENCY SOC LTD.
Date:

PROJECT DESCRIPTION

THE PERIODIC MAINTENANCE OF THE NATIONAL ROUTE N6 SECTION 7, FROM SMITHFIELD (KM 0.41) TO PARYSHOOGTE (KM 32.4).

DRAWING DESCRIPTION

FENCING & RELATED ITEMS STOCK PROOF FENCING
9 STRANDS ON STEEL POSTS

SCALE : NTS — SHEET 1 OF 1

PROJECT NUMBER	N.006-070-2024/1RF	
DRAWING LOCATION DATA	START	END
ROUTE	N6	N6
SECTION	7	7
DRAWING km DISTANCE	-	-
DRAWING TYPE	DRAINAGE	
BRIDGE/STRUCTURE No.	-	
CONSULTANT DRAWING No.	2024 04_TP_10/0	VER
SANRAL DOCUMENT #	-	V1