A3

NOTE: 1. REMOVE ALL SHARP EDGES.
2. ALL ITEMS MUST BE SUPPLIED IN ACCORDANCE WITH THE REQUIREMENTS OF DOC. No. 04336-010001-224001.

DO NOT SCALE
ALL DIMENSIONS ARE IN mm.

Should a Tenderer/Vendor not be able to meet the requirements of this document, it must declared in writing to the Buying Manager at the time of tendering/receipt of an order.

TENDER
DATE: 2022-08-
COPY NO 2
ISSUED BY. I.P.

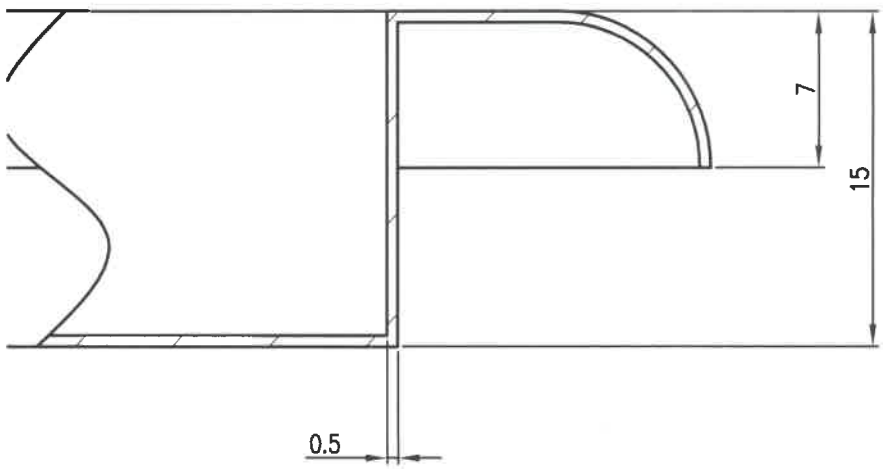

ENLARGED DETAIL A

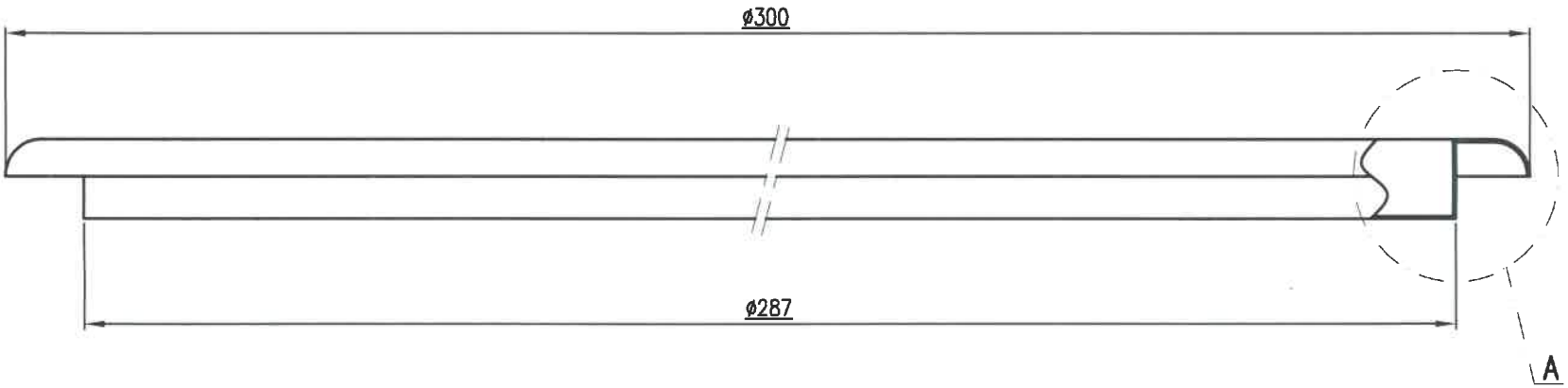

DONE BY | DETAILS | DATE. | APP. | REV.

N8 [ ][ ] HRC

PRODUCT: LEAD AZIDE/ LEAD STYPHNATE OR HEXAL P30				NEXT ASSY: 04336-98010001-201002 ITEM 2	REPLACES DRG. No.
JOB No.: KB/015/21MC	MATERIAL: MILD STEEL	MACHINE	DRAWN: MVD 2021-06-03	CHECKED: LPS 2021-06-04	TITLE: LID- 20 LITRE DRUM
GENERAL TOLERANCES (UNLESS OTHERWISE STATED)			FINALIZED	APPROVED: MGV 2021-06-08	
LENGTHS AND DIAMETERS: 0 TO 6, 6 TO 30, 30 TO 120, 120 TO 315, 315 TO 1000, 1000 TO 2000, 2000 TO 4000, 4000 AND MORE	ANGLES: 0° TO 30°, 30° AND MORE	RADII: 1 TO 6, 6 TO 30, 30 TO 100, 100 TO 300, 300 TO 1000	PROJECT LEADER	CODE No.: 07765011207/ 07765010602	DRG No.: 04336-98010001-203005
ALL GEOMETRIC TOLERANCES TO BE WITHIN 0.1		DENEL PMP	SCREEN DRG. No.	CAD No.	REV.

THIS DRAWING IS THE PROPERTY OF PRETORIA METAL PRESSINGS A DIVISION OF DENEL SOC Ltd AND MAY NOT BE COPIED OR USED FOR ANY PURPOSE