A2

NOTE:
1. TO BE READ IN CONJUNCTION WITH DOCUMENT 146 0020 OR 146 0030.

DO NOT SCALE
ALL DIMENSIONS ARE IN mm.

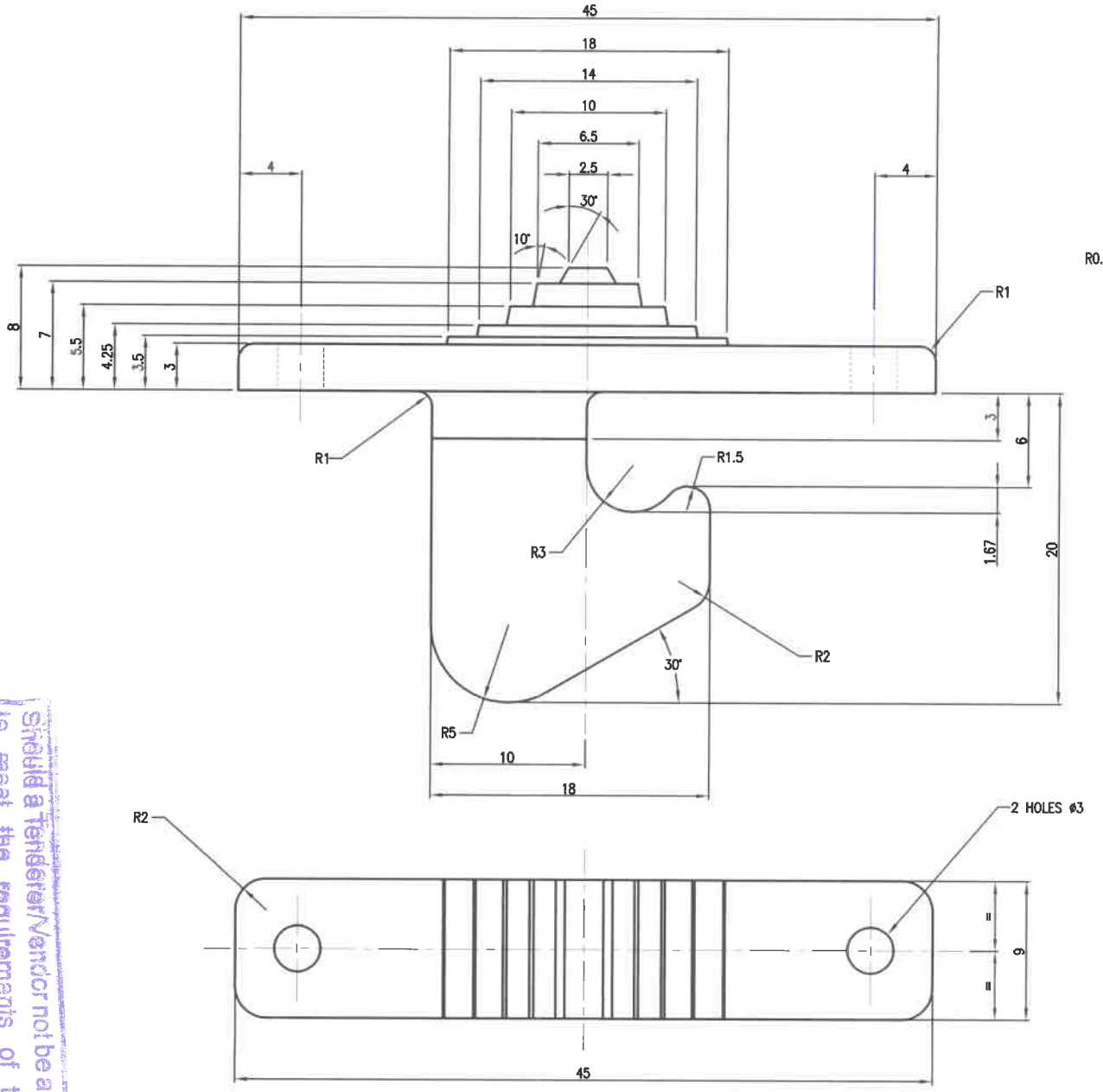

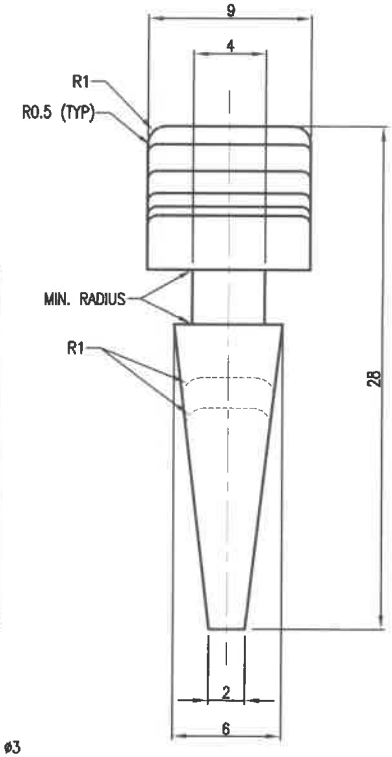

TENDER
DATE 2023-10-09
COPY NO: 7
ISSUED BY. IP

Should a Tenderer/Vendor not be able to meet the requirements of this document, it must declared in writing to the Buying Manager at the time of tendering/receipt of an order.

JOB No.	MATERIAL	DRAWN	CHECKED	NEXT ASSY.
03/E003/03SA	SEE NOTE 1	DJ 2017-06-26	FJW 2017-06-26	
GENERAL TOLERANCES (UNLESS OTHERWISE STATED)		FINALIZED	APPROVED MGV 2017-07-03	DRG No. 03-8115-2745-00003 REV. C
		PROJECT LEADER		
		SCREEN DRG. No.		CODE No. 01146002001 01146003009 CAD No. 00195920

LENGTHS AND DIAMETERS								ANGLES		RADII					ALL GEOMETRIC TOLERANCES TO BE WITHIN 0,1
0 TO 6 ±0,1	6 TO 30 ±0,2	30 TO 120 ±0,3	120 TO 315 ±0,5	315 TO 1000 ±0,8	1000 TO 2000 ±1,2	2000 TO 4000 ±2,0	4000 AND MORE ±3,0	0° TO 30' ±30'	30' AND MORE ±1°	1 TO 6 ±0,5	6 TO 30 ±1,0	30 TO 100 ±1,5	100 TO 300 ±2,0	300 TO 1000 ±3,0	

√ [√][√] HRC

REV.	APP.	DATE	DRG. REDRAWN & ITEM CODE FOR BOX UPDATED, JOB No. E2/054/175A	DRAWN BY
C	MGV	17/07/03		DJ

DETAILS

PRODUCT

MACHINE

REPLACES DRG. NO.

TITLE

LATCH FOR BOX 7716