FITTINGS SCHEDULE FOR SCOUR VALVE

ITEM NO.	DIA.	DESCRIPTION	QTY
1	90/110/125	CAST IRON FLANGE ADAPTOR	0
2	50	RESILENT SEAL GATE VALVE TO SABS 664 WITH SQUARE CAP AND COATED BODY	0
3	80	GMS PIPE, FLANGED ON ONE END AND THREADED ON THE OTHER END, 800mm LONG	0
4	80	GMS ELBOW, FOR THREADED GMS PIPE	0
5	80	GMS STRAIGHT PIPE, THREADED BOTH ENDS, 600mm LONG	0
6	80	JET DISPENSER THREADED ON ONE END	0

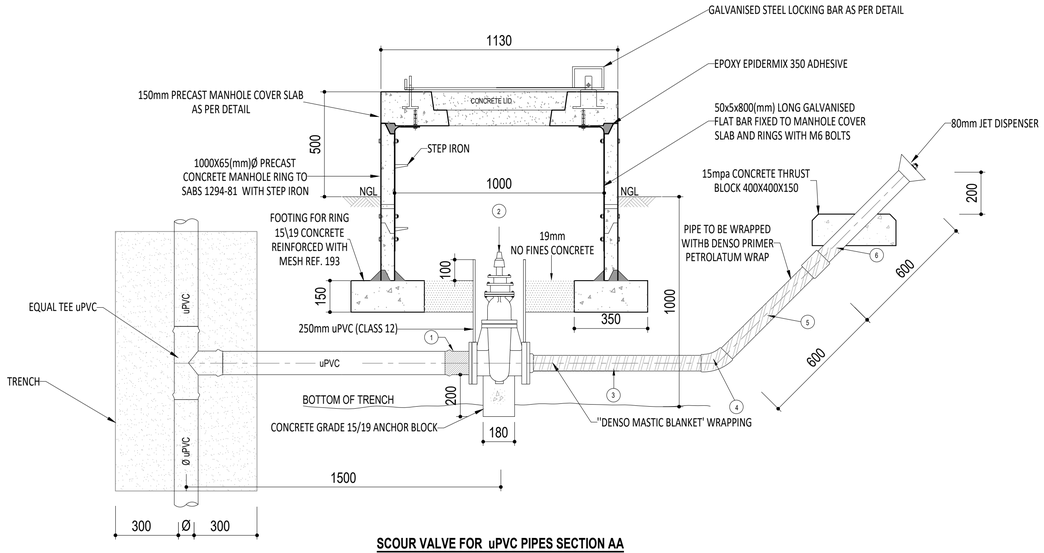

SCOUR VALVE FOR uPVC PIPES SECTION AA

SCALE 1:20

0 No.OFF

FITTINGS SCHEDULE FOR ISOLATING VALVE

ITEM NO.	DIA.	DESCRIPTION	QTY
1	100	RESILENT SEAL GATE VALVE TO SABS 664 WITH SQUARE CAP AND COATED BODY	1
2	110	CAST IRON FLANGE ADAPTOR	1

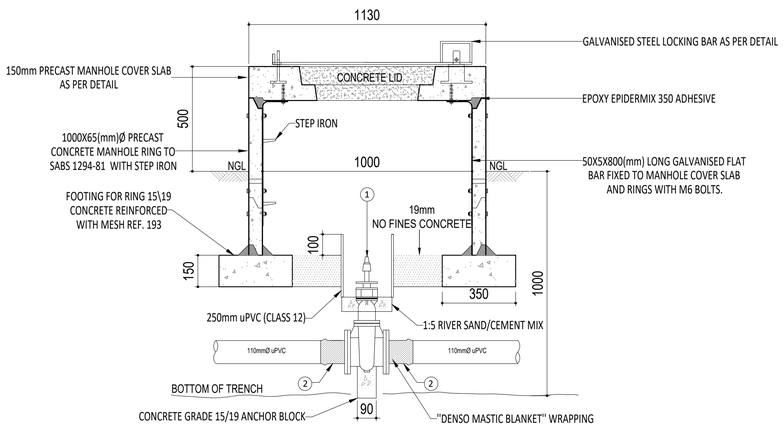

ISOLATION VALVE FOR 110mm Ø uPVC PIPES SECTION AA

SCALE 1:20

1 No.OFF

FITTINGS SCHEDULE FOR PIPES

ITEM NO.	DIA.	DESCRIPTION	QTY
1	25	VARIANT AIR VALVE 025 LN16 (ANTI-THEFT) INCLUDING BUTTERFLY VALVE	2
2	25	GALVANISED STEEL PIPE, FLANGED BOTH ENDS, 700mm LONG SANS 1123 T1600	1
3	100x50	CAST IRON HYDRANT UNEQUAL TEE, FLANGED ALL ENDS TO T16	1
4	110	CAST IRON FLANGE ADAPTOR	2

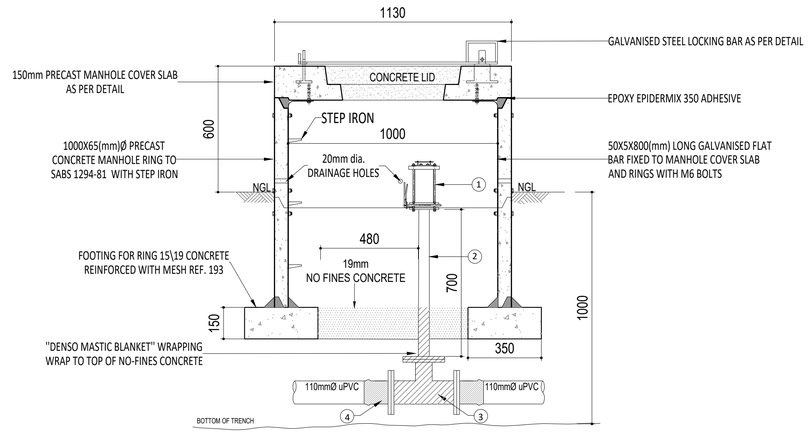

AIR VALVE FOR 110mm Ø uPVC PIPES SECTION AA

SCALE 1:20

2 No.OFF

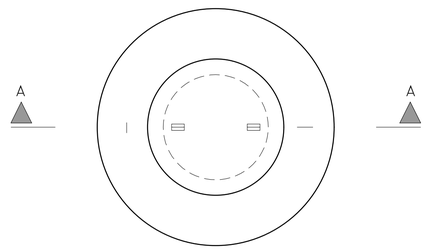

LOCKING BAR DETAIL: PLAN VIEW

SCALE 1:20

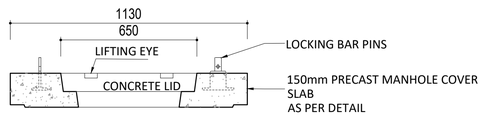

CONCRETE SLAB COVER DETAIL: PLAN VIEW

SCALE 1:20

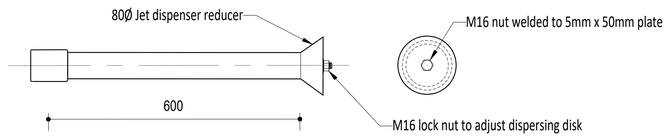

JET DISPENSER

SCALE 1:10

ISSUED FOR TENDER

NOTES

IZINGA HOLDINGS (Pty) Ltd
UNIT 2, LINCOLNS INN
7 MAXWELL STREET
EMPANGENI
3880
TEL: 035 772 1211
FAX: 086 459 4537
EMAIL: INFO@IZINGALABEZI.CO.ZA

UMKHANYAKUDE DISTRICT MUNICIPALITY
STAND 13433
KINGFISHER ROAD
MKUZE
3965

REFERENCE DRAWINGS

FOR TENDER
REGISTERED ENGINEER APPROVAL
NAME: H.A.D. KIRSTEN Pr. Eng No: 870583
SIGNATURE DATE: 8/09/2020

REV	DR	CH	DATE	DESCRIPTION

PROJ. NO: UKDM 1-2020

DWG NO: UM-G2-2020-006-UPVCD-00

PROJECT : GREATER INGWAVUMA WATER SUPPLY SCHEME ZONE10: PHASE 2

TITLE : HDPE PIPES 90, 110 & 125mm Ø UPVC VALVE DETAILS

SCALE: AS SHOWN	DRAWN BY: SK
DATE: 16/03/2020	CHECKED BY: NOK
PAPER SIZE: A2	APPROVED BY: BK