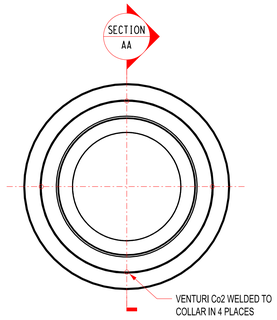

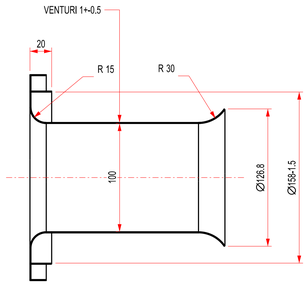

SECTION AA
SCALE 1:2

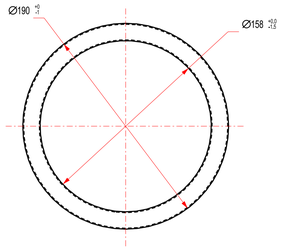

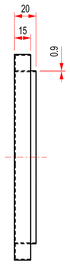

COLLAR
0.9mm THICK
SCALE 1:2

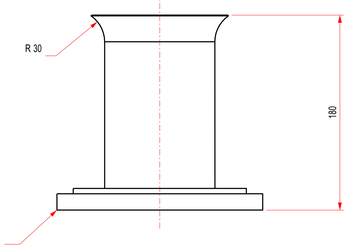

COLLAR
0.9mm THICK

VENTURY & COLLAR ASSEMBLY
SCALE 1:2

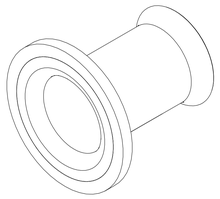

VENTURI

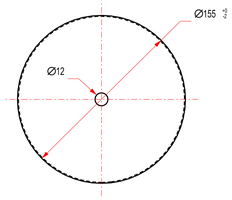

END CAP
0.9mm THICK
SCALE 1:2

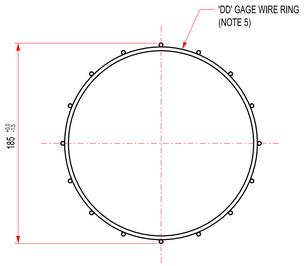

SECTION EE
SCALE 1:2

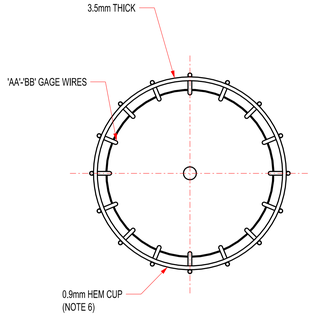

SECTION CC
SCALE 1:2

NOTES: (UNLESS OTHERWISE STATED)

1. BREAK SHARP EDGES AND REMOVE BURRS THAT COULD DAMAGE BAG.
2. ALL MATERIALS SHALL BE MILD STEEL.
3. THESE ARE SUGGESTED DIMENSIONS WHICH CAN BE MODIFIED AS LONG AS THE EFFECTIVE CAGE LENGTH IS DIM 'A' WITHIN LISTED TOLERANCES AND THE MAXIMUM RING SPACING IS 'CC'.
4. DIMENSIONS INCLUDE COATING, IF ANY.
5. RINGS TO BE INDUCTION WELDED TO WIRES.
6. WIRES TO BE INDUCTION WELDED TO HEM CUP.
7. WIRES TO BE INDUCTION WELDED TO COLLAR.
8. FINAL CAGE JOINT DIMENSIONS TO BE ESTABLISHED BY FABRICATOR TO ACHIEVE SPECIFIED ASSEMBLY AND DISASSEMBLY REQUIREMENTS.
9. CAGE STRAIGHTNESS IS MEASURED ALONG THE CAGE LENGTH FROM A REFERENCE LOCATED 25mm FROM THE CAGE TOP AND BOTTOM.
10. COLLAR AND RINGS AT JOINTS SHALL BE PERPENDICULAR TO THE CAGE VERTICAL CENTER TO MEET CAGE STRAIGHTNESS AND PLUMBNESS.
11. WELDING SPEC 240-106628253
12. KNUKLE WIRES TO CONNECT TOP AND BOTTOM CAGE
13. CAGES TO BE STAMPED AS PER SECIFICATION 474-11972

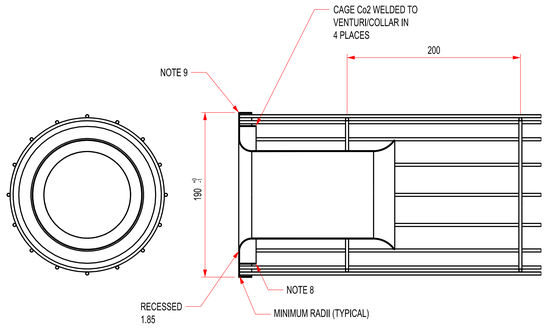

SECTION BB
SCALE 1:2

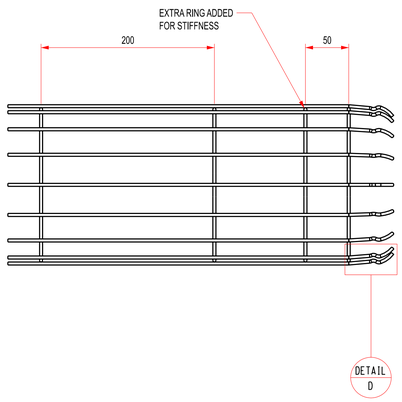

DETAIL B
SCALE 1:2

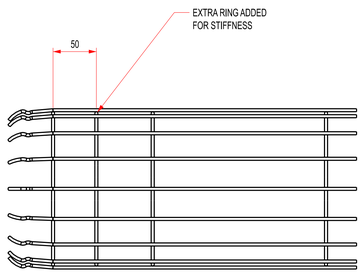

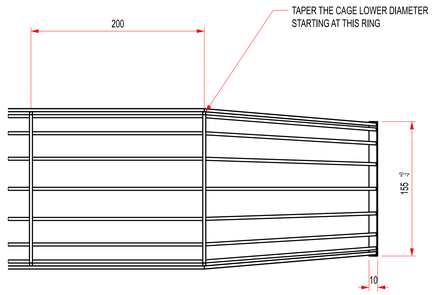

SECTION KK
SCALE 1:2

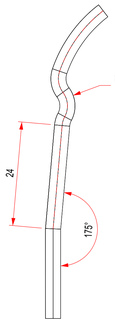

CONNECTION D
SCALE 2:1

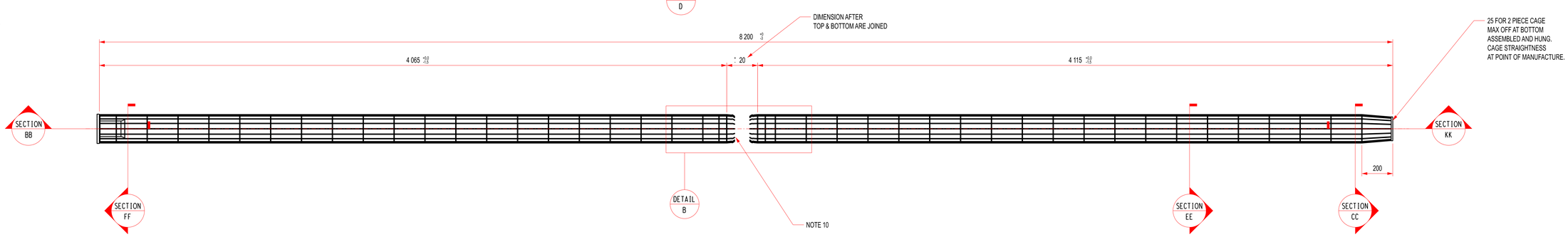

GAGE EQUIVALENT			
WIRE GA	SHEET GA		MM
10	-		3.5
WIRE GA REF. ASTM A510/A510M SHEET GA REF. ASTM A109/A109M			

WIRE GAGE AND COUPLING CONNECTIONS

COMPONENT	VERTICAL WIRES			HORIZONTAL WIRE RINGS			COUPLING CONNS
REFERENCE	AA	BB	-	CC	DD	-	TYPE A
CAGE SIZE DESIGNATION	NUMBER OF WIRES	GAGE	EQUIVALENT WIRE DIA	RING SPS (MAXIMUM)	GAGE	EQUIVALENT WIRE DIA	DOUBLE ENDED (NOTE 1)
16-WIRE	16	10	3.5mm	200mm	10	3.5mm	YES

CAGE CONSTRUCTION

CAGE SIZE DESIGNATION	DESCRIPTION
16 WIRE	16 VERTICAL WIRES, 10 GA BWG: 3.5 MM DIAMETER. HORIZONTAL WIRE RINGS SPACED AT (200 MM MAX., 10 GA BWG: 3.5 MM DIAMETER. ALL WIRES COATED SKS BLACK EDGING PRIMER SNK10, FERRO-PAK615 OR APPROVED EQUIVALENT

TOLERANCES

UNLESS STATED OTHERWISE DIMENSIONS ARE IN MM AND THE FOLLOWING TOLERANCES SHALL APPLY:

FRACTIONS - LINEAR = ±1.5 & DIAMETRAL = ±0.381

DECIMAL - X.XX = ±0.762 / X.XXX = ±0.254

ANGULAR - ±1/4°

D.O.	REV	DATE	REVISION	REV BY	CHKD BY	APP BY	AUTH BY	KAS APP	REFERENCE DRAWINGS
200	04	2021-10-18	DIMENSIONS CHANGED	WM					
200	03	2019-08-05	DESIGN CHANGES MADE	WM	EP	MR	SG	JM	01-416-13-AD-1C-02-0000/2
200	02	2019-01-21	CAGE MANUFACTURING DATA REVISED						657/48834 FILTER BAG DETAILS

AUTHORISED FOR ESKOM BY:
CODIFICATION BY:
APPROVED BY:
CHECKED BY:
CREATED BY: WM 2021-10-18
SCALE AS SHOWN

CLASSIFICATION: D00224
PBS PATH: HDD

Eskom
ESKOM HOLDINGS SOC Ltd
REG No. 2002/015527/30

MEDUPI POWER STATION

GENERAL ARRANGEMENT
UNITS 1-6 PJFF
16 WIRE CAGES
FOR 160mm BAGS

ESKOM DRAWING NO: 0.84/58616
SHT: 01 REV: 04
SIZE: A0L

DRAWING CLASSIFICATION: CONTROLLED DISCLOSURE