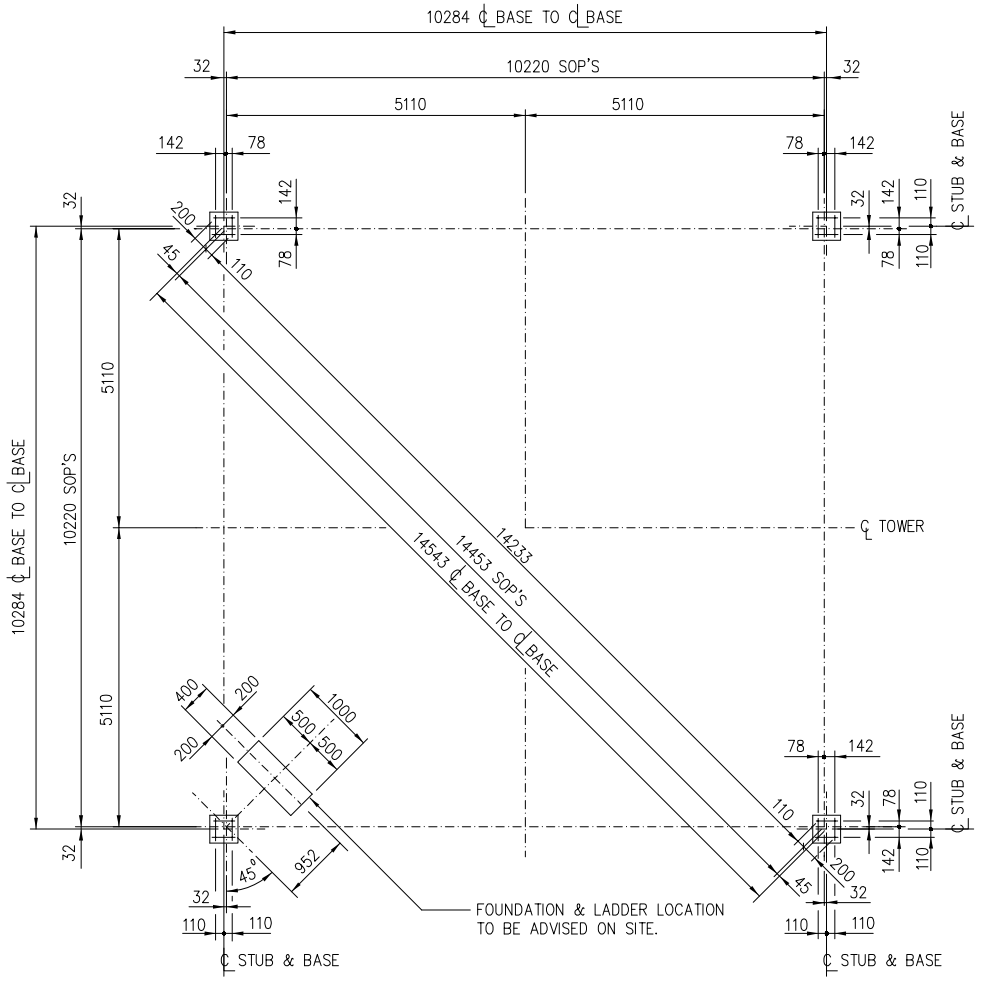

PLAN ON TOWER BASES

1:50

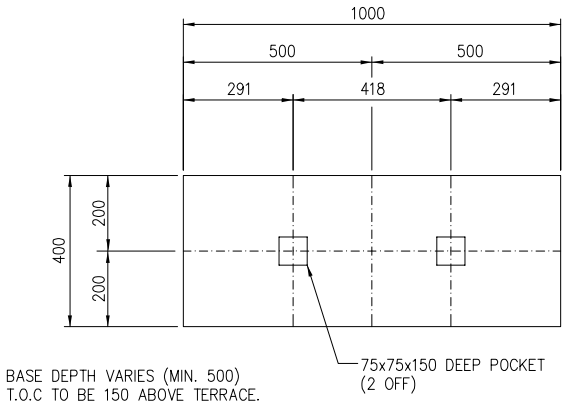

PLAN ON LADDER BASE

1:10

ITEM AND No OFF	Y R	DIA.	MK.	No PER ITEM	BARS OFF TOTAL	CUTTING LENGTH mm	TOTAL LENGTH m	SHAPE CODE	STANDARD SHAPES BENDING DIMENSIONS mm A	B	C	D	E	R
4	Y	16	01	92_	368	6000		38_	250_	5500	____	____	____	____
	Y	12	02	30_	120_	2085		83_	450_	368_	450_	____	____	____
	Y	25	03	16_	64_	1830		37_	1580	____	____	____	____	____
	_	__	04	___	NOT	USED		___	____	____	____	____	____	____
	R	12	05	5__	20_	3300		60_	800_	800_	____	____	____	____
										____	____	____	____	____
											____	____	____	____
	_	__		___				___	____	____	____	____	____	____
	_	__	__	___	___	____		___	____	____	____	____	____	____
	_	__	__	___	___	____		___	____	____	____	____	____	____

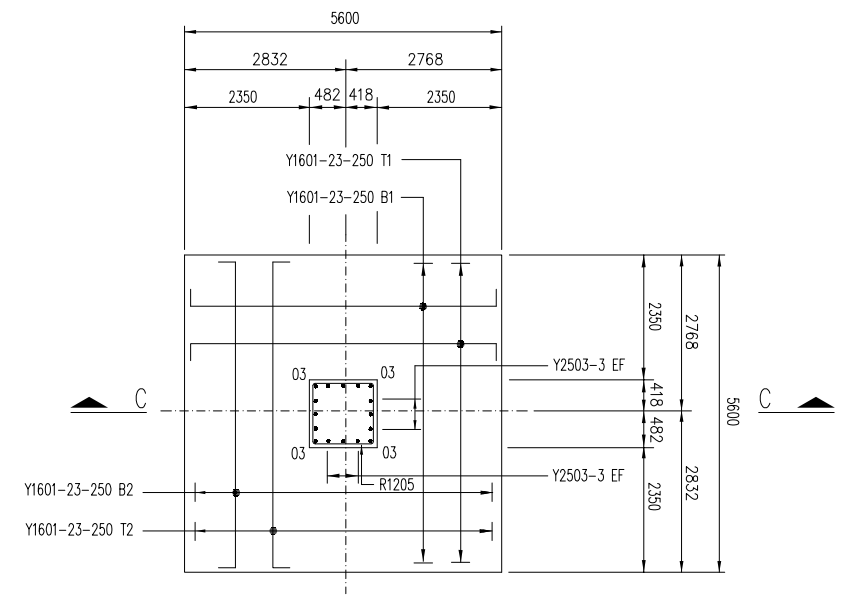

PLAN ON PAD FOUNDATION

1:50

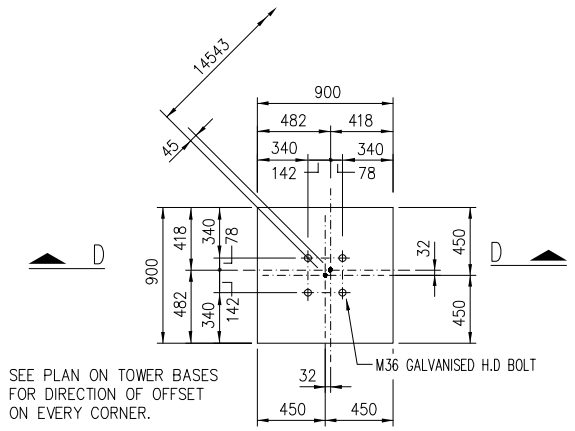

PLAN ON PAD FOUNDATION H.D BOLTS

1:25

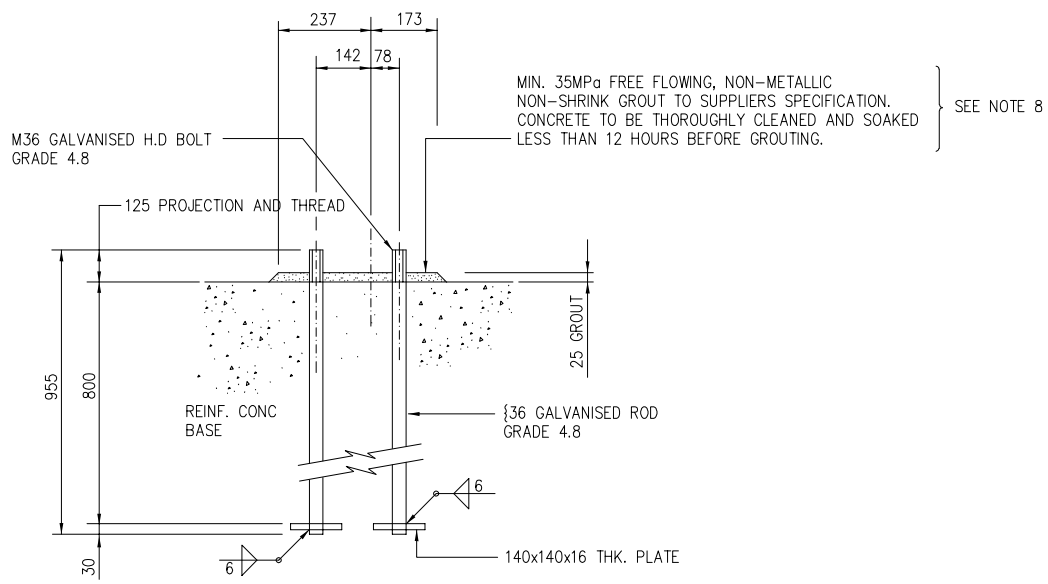

SECTION D-D
DETAIL – H.D BOLTS FOR PAD FOUNDATION

1:10

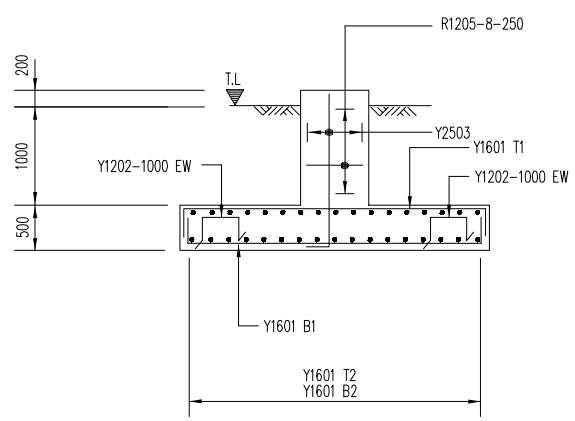

SECTION C-C

1:50

NOTES

1. COVER TO REINFORCEMENT TO BE 50mm.
2. HOLDING DOWN BOLTS TO BE CAST WITH STEEL TEMPLATES.
3. CONCRETE GRADE – 30/19.
4. ALL FOUNDATIONS TO BE INSPECTED BY ESKOM ENGINEER PRIOR TO CASTING OF CONCRETE.
5. T.O.C DENOTES TOP OF CONCRETE.
   T.L DENOTES TERRACE LEVEL.
6. H.D BOLTS: HDG TO SABS 736 SUPPLIED WITH NUTS AND WASHERS, CLEARLY MARKED WITH DIAMETER, GRADE & BASE TYPE.
7. ALL CONCRETE EDGES ABOVE TL TO HAVE 20x 20 CHAMFERS.
8. GROUT ONLY TO BE USED WHERE FOUN DATIONS ARE NOT LEVEL.
   PACKER PLATES TO BE HOT DIPPED GALVANISED.

THIS DRAWING HAS BEEN CREATED ON A C.A.D. SYSTEM AND ANY AMENDMENT TO THE DRAWING MUST BE EFFECTED ONLY ON THE SAME C.A.D. SYSTEM

REV	AUTH MAG	DATE DATUM	REVISION/REVISIES	BY DEUR	CHKD NAGES	REFERENCE DRAWINGS VERWYSINGSTEKENINGE
0			FIRST ISSUE / EERSTE UITREIKING			MONSTERLUS 65m TOWERT GEN. ARRANGEMENT.
			INDEX REF./INDEKSVERW			0.53/_

DRG.TEK REGISTR
CHKD NAGES
DRAWN GETEKEN S.DUBAZANA NOV_ 2020_
SCALE SKAAL AS_SHOWN
APPROVED
GOEDGEKEUR S.DUBAZANA.__ 18/11/20

ESKOM

MONSTERLUS 65m_MICROWAVE_TOWER_
CONCRETE_PAD_TYPE_FOUNDATIONS___
LAYOUT_AND_DETAILS_____

0.53/MONSTERLUS

REV 0_

SIZE GROOTTE A1L