# Specification
# For
# Three Phase Electric Actuators
## PL 619

**DOCUMENT APPROVAL PROCESS**

| NAME | | POSITION/MEETING NO. | SIGNATURE | DATE |
|---|---|---|---|---|
| Originator: | S Rugbeer | | | |
| Approver: | | | | |
| Original date: | | | | |
| Effective date: 28/02/2018 | | | | |

## 1. DOCUMENT CHANGE HISTORY

| *The owner of this document is responsible for the revision and control of the document, including updating of the table below, which contains the history of the document with details of each revision.* | | | |
|---|---|---|---|
| Date | Previous Rev No. | New Rev No. | Details of Revision |
| 28/02/2018 | C | 04 | Reformat Document; add breaking torque & self-locking |
| | | | |
| | | | |
| | | | |
| | | | |
| | | | |
| | | | |
| | | | |
| | | | |

This table summarises what has been changed in the document so that it is easy to keep track of the effected changes.

**TABLE OF CONTENTS**


1. INTRODUCTION ..... 4
2. SCOPE ..... 4
3. REFERENCE DOCUMENTATION ..... 4
4. SPECIFICATION FOR MULTI-TURN ELECTRIC ACTUATORS ..... 5
   - 4.1 General ..... 5
   - 4.2 Environmental ..... 5
   - 4.3 Actuator Sizing ..... 5
   - 4.4 Motor ..... 5
   - 4.5 Motor Protection ..... 6
   - 4.6 Integral Starter and Transformer ..... 6
   - 4.7 Local Controls ..... 6
   - 4.8 Remote Control Facilities ..... 6
   - 4.9 Remote Valve Position and Status Indication ..... 7
   - 4.10 Local Position Indication ..... 8
   - 4.11 Monitor relay ..... 8
   - 4.12 Torque and Limits ..... 8
   - 4.13 Terminals and Cable Entry ..... 9
   - 4.14 Hand Operation ..... 9
   - 4.15 Drive Interface ..... 10
   - 4.16 Gearing ..... 10
   - 4.17 Valve Position Transmitter ..... 10
   - 4.18 Speed Of Operation ..... 10
   - 4.19 Guarantee ..... 10
   - 4.20 Drawings / Diagrams ..... 10
   - 4.21 Flameproof Certificates ..... 11
   - 4.22 Commissioning Kit ..... 11
   - 4.23 Performance and Test Certificate ..... 11
5. APPENDICES ..... 11
6. COMPLIANCE ..... 11
7. APPENDIX 1 - Technical Data Sheet ..... 13

## 1. INTRODUCTION

The objective of this Specification is to establish standards and codes of practice that are required to be adhered to by both Contractor and Client in the design, supply and installation electric actuators, on all Transnet Pipelines Sites.

## 2. SCOPE

This specification defines the minimum requirements for electric actuators having a three phase motor, reduction gearing, reversing contactor starter with local / remote controls, turns and torque limitation with electronic logic controls and monitoring facilities, all housed in a flameproof double-sealed watertight enclosure in compliance with IP 68. Contractors are required to familiarise themselves with all applicable Standards and Codes of Practice listed herein, and to ensure compliance in the execution of any work in terms of this document. Failure to comply may render the contractor liable for corrections at his own cost.

These Standards and Codes of Practice should be read in conjunction with all other Specifications and drawings as issued for a particular contract. Where discrepancies occur, these must be brought to the attention of Transnet Pipelines in writing before commencement of work. In the event of any conflict between the contents of any documents forming part of a contract (as listed in the Schedule of Contract Documents) and this document, the former shall prevail.

## 3. REFERENCE DOCUMENTATION

| **Standard** | **Subject** |
|---|---|
| SANS 60079 | Explosive atmospheres: Part 1: Equipment protection by flameproof enclosures "d"; Part 14: Electrical installations design, selection and erection; Part 17: Electrical installations inspection and maintenance |
| SANS 10086-1 | The installation, inspection and maintenance of equipment used in explosive atmospheres Part 1: Installations including surface installations on mines |
| SANS 10108 | The classification of hazardous locations and the selection of equipment for use in such locations |
| SANS 10089-2 | The petroleum industry Part 2: Electrical and other installations in the distribution and marketing sector |
| SANS 10142-1 | The wiring of premises Part 1: Low-voltage installations |
| EN 15714-2 | Industrial valves - actuators part 2: electric actuators for industrial valves - basic requirements |
| OHS Act | Occupational Health and Safety Act No. 85 of 1993 as amended |

## 4. SPECIFICATION FOR MULTI-TURN ELECTRIC ACTUATORS

### 4.1 General

The actuators shall be suitable for use on a nominal 400 volt, 3 phase, 50Hz power supply and are to incorporate motor, integral reversing starter, local control facilities and terminals for remote control and indication connections housed within a self-contained, sealed enclosure.

In order to maintain the integrity of the enclosure, setting of the torque levels, position limits and configuration of the indication contacts etc. shall be carried out without the removal of any actuator covers. Sufficient commissioning tools shall be provided with the actuators and must meet the enclosure protection and certification levels of the actuators. Commissioning tools shall not form an integral part of the actuator and must be removable for secure storage / authorised release.

The actuator shall include a device to ensure that the motor runs with the correct rotation for the required direction of valve travel irrespective of the connection sequence of the power supply

### 4.2 Environmental

4.2.1 Actuators shall be suitable for indoor and outdoor use. The actuator shall be capable of functioning in an ambient temperature ranging from -33°C (22°F) to 70°C (140°F), up to 100% relative humidity, sea level and altitudes of 1800m above sea level. Actuators for hazardous area applications shall meet the area classification, gas group and surface temperature requirements specified in the data sheet.

### 4.3 Actuator Sizing

4.3.1 The torque of the actuator shall be sized such that it allows for a minimum of 30% oversizing of the actuator, with respect to the *valve breaking torque.*

4.3.2 The actuator shall be sized to guarantee valve closure at the specified differential pressure and temperature. The safety margin of motor power available for seating and unseating the valve shall be sufficient to ensure torque switch trip at maximum valve torque with the supply voltage 10% below nominal.

### 4.4 Motor

4.4.1 The motor shall be suitable for use on nominal 400 volt - 3 phase - 50 Hz power supply.

4.4.2 It shall be a Class F insulated squirrel cage motor of high torque low inertia design, class F insulated with a class B temperature rise giving a time rating of 15 minutes at 40°C (104°F) at an average load of at least 33% of maximum valve torque.

4.4.3 Inherent burn-out protection must be embedded in the thermostats, with facility for by-passing under emergency shutdown control.

4.4.4 Electrical and mechanical disconnection of the motor should be possible without draining the lubricant from the actuator gear case.

### 4.5 Motor Protection

4.5.1 Protection shall be provided for the motor as follows:

- Stall - the motor shall be de-energized within 8 seconds in the event of a stall when attempting to unseat a jammed valve.
- Over temperature - thermostat will cause tripping of the motor. Auto-reset on cooling.
- Single phasing - lost phase protection.
- Direction – phase rotation correction

### 4.6 Integral Starter and Transformer

4.6.1 The reversing starter, control transformer and local controls shall be integral with the valve actuator, suitably housed to prevent breathing and condensation. The starter shall be suitable for 60 starts per hour and of rating appropriate to motor size. The controls supply transformer shall be fed from two of the incoming three phases and incorporate overload protection. It shall have the necessary tapping and be adequately rated to provide power for the following functions:

- Energising of the contactor coils.
- 24V DC or 110V AC output for remote controls (maximum 5W/VA)
- Supply for all the internal electrical circuits.

### 4.7 Local Controls

4.7.1 The actuator shall incorporate local controls for Open, Close and Stop and a Local/Stop/Remote mode selector switch lockable in any one of the following three positions: local control only, stop (no electrical operation), remote control plus local stop only. It shall be possible to select maintained or non-maintained local control.

4.7.2 The local controls shall be arranged so that the direction of valve travel can be reversed without the necessity of stopping the actuator.

4.7.3 The local controls and display shall be rotatable through increments of 90 degrees to suit valve and actuator orientation.

### 4.8 Remote Control Facilities

4.8.1 The necessary control, wiring and terminals shall be provided integral to the actuator enclosure. Open and close external interlocks shall be made available to inhibit local and remote valve opening / closing control. It shall be possible to configure the interlocks to be active in remote control only.

4.8.2 Remote control signals fed from an internal 24V DC (or 110VAC) supply and/or from an external supply between 20V and 60 VDC or 40V and 120VAC, to be suitable for any one or more of the following methods of control:

- Open, Close and Stop control.
- Open and Close maintained or “push to run” (inching) control.
- Overriding Emergency Shut-down to close (or open) valve from a normally closed or open contact.
- Two-wire control, energise to close (or open), de-energise to open (or close).

4.8.3 Additionally provision shall be made for a separate 'drive enable' input to prevent any unwanted electrical operation.

4.8.4 It shall be possible to reverse valve travel without the necessity of stopping the actuator. The motor starter shall be protected from excessive current surges during rapid travel reversal. The internal circuits associated with the remote control and monitoring functions are to be designed to withstand simulated lightning impulses of up to 2kV.

4.8.5 Provision shall be made for operation by distributed control system utilising the following network systems:

- Profibus
- Modbus
- Foundation Fieldbus
- Pakscan (wired and wireless)
- HART

## 4.9 Remote Valve Position and Status Indication

4.9.1 The actuator shall be fitted with "remote" input relay facilities having the following operating functions:
Open - Close – Stop/maintain - Emergency Shut Down – Open interlock and closed interlock.

4.9.2 The abovementioned controls shall be fed from the actuators 24V DC supply or from external supplies of 20 - 60 V AC/DC or 60 - 120 V AC.

4.9.3 The internal control gear design shall ensure secure fitment of all components and control cards so as to withstand continuous vibration of external pipe manifolds. All terminals and control gear shall be secured by utilizing self-locking nuts.

4.9.4 Four contacts shall be provided which can be selected to indicate any position of the valve; Provision shall be made for the selection of a normally closed or open contact form. Contacts shall maintain and update position indication during handwheel operation when all external power to the actuator is isolated.

4.9.5 The contacts shall be rated for 5mA to 5A, 120V AC, 30V DC.

4.9.6 As an alternative to providing valve position indication any of the four above contacts shall be selectable to signal one of the following:

- Valve opening, closing or moving
- Thermostat tripped, lost phase
- Motor tripped on torque in mid travel, motor stalled
- Remote selected
- Actuator being operated by handwheel
- Actuator fault

### 4.10 Local Position Indication

4.10.1 The actuator display shall include a dedicated numeric/symbol digital position indicator displaying valve position from fully open to fully close in 0.1% increments.

4.10.2 Valve closed and open positions shall be indicated by symbols showing valve position in relation to the pipework to ensure that valve status is clearly interpreted.

4.10.3 With mains power connected, the display shall be backlit to enhance contrast at all ambient light levels and shall be legible from a distance of at least 5m (16ft).

4.10.4 Red, green, and yellow LEDs corresponding to open, closed and intermediate valve positions shall be included on the actuator display when power is switched on. The yellow LED should also be fully programmable for on/off, blinker and fault indication.

4.10.5 The digital display shall be maintained and updated during handwheel operation when mains power to the actuator is isolated.

4.10.6 The LCD glass shall be resistant to environmental conditions and UV radiation or abrasive materials.

4.10.7 The local controls and display shall be rotatable through increments of 90 degrees to suit valve and actuator orientation.

### 4.11 Monitor relay

4.11.1 A configurable monitor relay shall be provided as standard, which can be used to indicate either Availability or Fault. The relay should be a spring return type with a Normally Open / Normally Closed contact pre-wired to the terminal bung.

4.11.2 The Monitor (availability or fault) relay, being energized from the control transformer will de-energise under any one or more the following conditions:

- Loss of one or more of the power supply phases
- Loss of control circuit supply
- Local control selected
- Actuator control selected to Local or Stop
- Motor thermostat tripped
- Actuator internal fault

### 4.12 Torque and Limits

4.12.1 Torque and turns limitation to be adjustable as follows:

- Position setting range – multi-turn: 2.5 to 100,000 turns, with resolution to 7.5 deg. of actuator output.
- Torque setting: 40% to 100% rated torque.

4.12.2 Position measurement – Absolute position measurement should be incorporated within the actuator. The technology must be capable of reliably measuring position even in the case of a single fault or loss of the supply voltage. The design must be simple with the

minimum amount of moving parts. Technologies such as LEDs or potentiometers for position measurement are considered unreliable and therefore not preferred.

4.12.3 Measurement of torque shall be from direct measurement of force at the output of the actuator. Methods of determining torque-using data derived from the motor such as motor speed, current, flux, etc are not acceptable.

4.12.4 Electronic "latching" shall be a standard feature of the torque sensing system to inhibit torque off during unseating/ starting, and reversing in mid travel against high inertia loads.

4.12.5 The valve position data must be maintained in the event of manual operation of the valve during isolation or loss of power supply.

4.12.6 Torque settings and general operation settings shall be set via a remote handheld setting tool and not via a personal or laptop computer.

### 4.13 Terminals and Cable Entry

4.13.1 A single separately sealed compartment shall contain a solid terminal block for power and control terminations.

4.13.2 Internal wiring shall be tropical grade PVC insulated stranded cable of appropriate size for the control and 3-phase power. Each wire shall be clearly identified at each end. The terminals shall be embedded in a terminal block of high tracking resistance compound.

4.13.3 The terminal compartment shall be separated from the inner electrical components of the actuator by means of a watertight seal and shall be provided with a minimum of 3 threaded cable entries of size M20. The center entry shall be equipped / fitted with a “EXD” flameproof plug.

4.13.4 All wiring supplied as part of the actuator to be contained within the main enclosure for physical and environmental protection. External conduit connections between components are not acceptable. A durable terminal identification card showing a plan of terminals shall be provided attached to the inside of the terminal box cover indicating:

- Serial number
- External voltage values
- Wiring diagram number
- Terminal layout

### 4.14 Hand Operation

4.14.1 A handwheel shall be provided for emergency operation, engaged when the motor is declutched by a lever or similar means, the drive being restored to electrical operation automatically by starting the motor. The handwheel or selection lever shall not move on restoration of motor drive. Provision shall be made for the hand/auto selection lever to be locked in both hand and auto positions. It should be possible to select hand operation while the actuator is running or start the actuator motor while the hand/auto selection lever is locked in hand without damage to the drive train.

4.14.2 Clockwise operation of the handwheel shall give closing movement of the valve unless otherwise stated in the data sheet. For linear valve types the actuator handwheel drive must be mechanically independent of the motor drive and should be such as to permit valve operation in a reasonable time with a manual force not exceeding 400N through stroke and 800N for seating/unseating of the valve

**4.15 Drive Interface**

4.15.1 The actuator shall be furnished with a drive bushing that is easily detachable for machining to suit the valve stem or gearbox input shaft. The drive bush shall be positioned in a detachable base of the actuator. Thrust bearings shall be sealed for life and the base shall be capable of withstanding five times the rated thrust of the actuator.

**4.16 Gearing**

4.16.1 The actuator gearing shall be totally enclosed in an oil-filled gearcase suitable for operation at any angle. Grease lubrication is not permissible. All drive gearing and components must be of metal construction and incorporate a lost-motion hammerblow feature.

4.16.2 For rising spindle valves the output shaft shall be hollow to accept a rising stem, and incorporate thrust bearings of the ball or roller type at the base of the actuator. The design should be such as to permit the opening of the gearcase for inspection or disassembled without releasing the stem thrust or taking the valve out of service.

4.16.3 For 90° operating type of valves (Four-Way Diverter Valves) drive gearing shall be self-locking to prevent the valve back-driving the actuator.

**4.17 Valve Position Transmitter**

4.17.1 The actuator shall provide a contactless, internally fed 4 - 20 mA analogue signal which shall be proportional to the valve position and selectable for minimum signal corresponding to fully Closed or Open with automatic zero span setting.

4.17.2 OPTION – Only if specified: The actuator shall be equipped with a function as to change position ranging from 0% to 100% if pulsed from a remote 4 to 20mA control signal.

**4.18 Speed Of Operation**

4.18.1 The valve supplier shall specify the opening and closing times.

**4.19 Guarantee**

4.19.1 The actuator shall be subject to a guarantee for a period of one year against faulty and/or inferior workmanship and material.

4.19.2 The guarantee period shall commence the day the actuator is commissioned and accepted by Transnet Pipelines.

**4.20 Drawings / Diagrams**

4.20.1 Detailed drawings and circuit diagrams shall be supplied with the actuator

### 4.21 Flameproof Certificates

4.21.1 A certificate must be issued by an approved inspection authority, certifying that the actuator has been found, through inspection and testing, to be constructed in accordance with standards listed under clause 3, of this document, and suitable for use in Zone 1 locations.

### 4.22 Commissioning Kit

4.22.1 Each actuator shall be supplied with a start-up kit comprising installation instruction manual, electrical wiring diagram and cover seals to make good any site losses during the commissioning period. In addition, sufficient actuator commissioning tools shall be supplied to enable actuator set up and adjustment during valve/actuator testing and site installation commissioning.

### 4.23 Performance and Test Certificate

4.23.1 Each actuator must be performance tested and individual test certificates shall be supplied free of charge. The test equipment should simulate a typical valve load, and the following parameters should be recorded.

- Current at maximum torque setting
- Torque at maximum torque setting
- Flash test voltage
- Actuator output speed or operating time.

4.23.2 In addition, the test certificate should record details of specification such as gear ratios for both manual and automatic and second stage gearing if provided, drive closing direction, wiring diagram number.

## 5. APPENDICES

5.1 Appendix 1 - "Technical Data Sheet"
This appendix calls for specific technical information to be furnished with tenders.

5.2 Appendix 1 will be used during adjudication of tenders to assess the equipment offered.

5.3 Equipment described in appendix 1 shall be supplied by the successful tenderers and no changes or substitutions will be allowed without the written consent of Transnet Pipelines.

5.4 Acceptance of the equipment detailed in appendix 1 by Transnet Pipelines in no way relieves the tenderer of his obligation to fulfill his statement of compliance with the specification.

5.5 The tenderer is responsible for the accuracy of information submitted in this appendix.

## 6. COMPLIANCE

6.1 Tenders shall submit their main offers in terms of this specification. Deviations from the laid down requirements, which are of a minor nature and do not depart materially from the specification will be considered at the discretion of the Chief Executive, Transnet Pipelines.

6.2 Tenders shall indicate paragraph by paragraph either that their offers comply in every respect with this specification, or, if not, precisely how they differ.

6.3 A broad statement to the effect that the equipment is in accordance with the specification is not acceptable.

6.4 Failure to comply with the above requirements may preclude a tenderer from consideration.

# 7. APPENDIX 1 - Technical Data Sheet

## MANUFACTURER'S GENERAL PARTICULARS AND GUARANTEES

(Information to be supplied by Tenders.)

| | | | | | | | | |
|---|---|---|---|---|---|---|---|---|
| GENERAL | 1 | Tag No | | | | | | |
| | 2 | Service | | | | | | |
| | 3 | Line No | P&ID No | | | | | |
| | 4 | Area Classification | | | | | | |
| | 5 | Power Failure Position | Leakage Class | | | | | |
| | 6 | Ambient Temperature | Humidity | | | °C | % | RH |
| PIPE LINE | 7 | Line Size and Schedule | Inlet | Outlet | | | | |
| | 8 | Line Material | Line Insulated | | | | | |
| | 9 | Design Pressure | Min | Max | kPa-g | | kPa-g | |
| | 10 | Design Temperature | Min | Max | °C | | °C | |
| PROCESS CONDITIONS | 11 | Process Fluid | | | | | | |
| | 12 | Fluid Inlet State | Fluid Inlet Phase | | | | | |
| | 13 | Shutoff Differential Pressure | | | | | | |
| | 14 | | | | Units | Min | Norm | Max |
| | 15 | Flow Rate | | | m³/h | | | |
| | 16 | Inlet Pressure | | | kPa | | | |
| | 17 | Pressure Drop Across Valve | | | kPa | | | |
| | 18 | Inlet Temperature | | | °C | | | |
| | 19 | Inlet Density | | | kg/m³ | | | |
| | 20 | Inlet Viscosity | | | cP | | | |
| | 21 | Density @ Reference Conditions | | | kg/m³ | | | |
| | 22 | | | | | | | |
| | 23 | | | | | | | |
| | 24 | | | | | | | |
| CALCULATED RESULTS | 25 | Flow Coefficient CV | | | | | | |
| | 26 | Noise Level (dBA) | | | | | | |
| | 27 | Flow Conditions | | | | | | |
| | 28 | Stroke Time Open | Stroke Time Close | | | | | |

| | | | | | | | |
|---|---|---|---|---|---|---|---|
| BODY | 29 | MFR | Model | | ACTUATOR | 59 | Viv Torque Break |
| | 30 | Serial No | | | | 60 | Act Torque Break |
| | 31 | Body Type | Size | | | 61 | Lockable Remote Switch |
| | 32 | Body Material | | | | 62 | Cp Protection |
| | 33 | Face to Face Dim | | | | 63 | Painting |
| | 34 | End Connect & Rating | | | | 64 | Protection Method |
| | 35 | Face Finish | | | | 65 | IP Rating |
| | 36 | Bleed System | | | | 66 | Motor Rating kw |
| | 37 | Bonnet Type | | | | 67 | Motor Speed (RPM) |
| | 38 | Configuration | | | ELECTRICAL CONNECTION | 68 | Supply Voltage Vac |
| TRIM | 39 | Seal Material | | | | 69 | Cable Entries |
| | 40 | Plug/ Ball/ Disk Mat | | | | 70 | Signal Input |
| | 41 | Seat Mat | Stem Mat | | | 71 | ESD Connection |
| | 42 | Stem Packing | | | | 72 | EEx Rating |
| | 43 | Bearing Material | | | SWITCHBOX / FEEDBACKS | 73 | MFR Model |
| | 44 | Trim Size | Rated CV | | | 74 | Open / Closed |
| GEAR BOX | 45 | Make | Type | | | 75 | Remote / Local |
| | 46 | Model | | | | 76 | IS Rating IP Rating |
| | 47 | Gear Ratio | | | | 77 | Switch Type |
| | 48 | Connection | | | | 78 | Housing Material |
| ACTUATOR | 49 | MFR | Type | | | 79 | Mounting |
| | 50 | Model | | | | 80 | Switch Rating |
| | 51 | Serial No | | | CERTIFICATE REQUIRED | 81 | Haz Area Certificates |
| | 52 | Size | | | | 82 | Pressure Test Certificate |
| | 53 | Fail Safe | Position | | | 83 | Leakage |
| | 54 | Handwheel | Gearbox | | | 84 | Calibration Certificate |
| | 55 | Travel Stops | Travel | % | | 85 | Material Certificates |
| | 56 | Position Indication | | | PURCHASE | 86 | Manufacturer |
| | 57 | Local Display | | | | 87 | Model |
| | 58 | SIL Monitoring Relay | | | | 88 | Supplier |

Notes:
1. See Pipeline Spec.2684358-U-A00-PI-SP-011
2. See Drawing No. 2684358-J-A00-IN-DG-001
3. See Technical Spec 2684358-U-A00-PI-SP-032

TRANSNET

| REV | DATE | BY | REMARKS | PROJECT | |
|---|---|---|---|---|---|
| | | | | PROJ No | |
| | | | | Instrument Specification Actuated On/Off Valve | No |
| | | | | | OLD DOC No |
| | | | | | CLIENT No |
| | | | | CHKD: APRVD: | CODE No : SHEET : 1 REV : 02 |

# SPECIFICATION FOR LOW VOLTAGE SWITCHGEAR AND DISTRIBUTION BOARDS

**PL 631**

REV. 009

**DOCUMENT APPROVAL PROCESS**

| NAME | | POSITION/MEETING NO. | SIGNATURE | DATE |
|---|---|---|---|---|
| Originator: | | | | |
| Approver: | | Chief Technical Officer | | |
| Original date: 17/06/1999 | | | | |
| Effective date: 29/02/2016 | | | | |

## 1. DOCUMENT CHANGE HISTORY:

*The owner of this document is responsible for the revision and control of the document, including updating of the table below, which contains the history of the document with details of each revision.*

| Date | Previous Rev No. | New Rev No. | Details of Revision |
|---|---|---|---|
| 17/06/99 | 001 | | Document distributed for comment |
| 17/08/99 | 002 | | Document approved for Distribution |
| 26/04/2000 | 003 | | Revised as per Phase II |
| 10/05/00 | 004 | | Revised as per Phase II – Siemens comments added |
| 21/09/00 | 005 | | Earthing Requirements/Wiring Codes of Practice/Labelling Standards added |
| 10/04/01 | 006 | | Fault Level ratings reviewed |
| 01/09/02 | 007 | | Panel labelling, cable termination assemblies reviewed |
| 01/08/07 | 008 | | SABS 10142:2003 Requirements added. Transnet pipeline Logo added. |
| 10/02/2016 | | 009 | Document Updated |

## TABLE OF CONTENTS


1. DOCUMENT CHANGE HISTORY: ..... 2
2. INTRODUCTION ..... 4
3. SCOPE ..... 4
4. NORMATIVE REFERENCES ..... 5
5. TRANSNET PIPELINES SPECIFICATIONS ..... 7
6. ABBREVIATIONS & DEFINITIONS ..... 7
8. SITE CONDITIONS ..... 12
9. DRAWINGS AND INSTRUCTIONS ..... 14
10. STANDARD OF WORK, EQUIPMENT & MATERIALS ..... 16
11. CONSTRUCTION OF SWITCHBOARD / DISTRIBUTION PANELS ..... 16
12. CONTROL TRANSFORMERS / CONTROL VOLTAGE DISTRIBUTION ..... 26
13. TERMINAL / WIRING SPECIFICATIONS ..... 26
14. WIRING STANDARDS ..... 28
15. EQUIPMENT SPECIFICATIONS ..... 33
16. INSTRUMENT SPECIFICATIONS ..... 37
17. INSTALLATION ..... 40
18. LABELLING ..... 41
19. FACTORY ACCEPTANCE TEST PROCEDURES ..... 44
20. APPENDIX 1 ..... 47

## 2. INTRODUCTION

The objective of this Specification is to establish standards and codes of practice that are required to be adhered to by both Contractor and Client in the design, supply and installation of LV Switchgear and Distribution Boards, on all Transnet Pipelines Sites.

## 3. SCOPE

### 3.1 General

This document describes as a minimum, the technical requirements and general responsibilities regarding the safety, design, supply, manufacture, population, type-testing, performance, constructional and routine testing, delivery to site, site erection, site testing and commissioning requirements for 50 Hz LV Distribution Switchgear and Controlgear ASSEMBLIES for voltages up to 660 V. Contractors are required to familiarise themselves with all applicable Standards and Codes of Practice listed herein, and to ensure compliance in the execution of any work in terms of this document. Failure to comply may render the contractor liable for corrections at his own cost.

These Standards and Codes of Practice should be read in conjunction with all other Specifications and drawings as issued for a particular contract. Where discrepancies occur, these must be brought to the attention of Transnet Pipelines in writing before commencement of work. In the event of any conflict between the contents of any documents forming part of a contract (as listed in the Schedule of Contract Documents) and this document, the former shall prevail.

### 3.2 Application to Work Activities

The Standards and Codes of Practice contained herein apply to all installations involving the safety, design, supply, manufacture, population, type-testing, performance, constructional and routine testing, delivery to site, site erection, site testing and commissioning requirements for 50 Hz LV Distribution Switchgear and Controlgear ASSEMBLIES for voltages up to 660 V, and includes amongst others the following activities:

- Design, supply and installation of LV Distribution Panels for voltages up to 660 V
- Design, supply and installation of Motor Control Centres for voltages up to 660 V

The ASSEMBLIES shall be required for distribution, motor control & /or a combination of these functions, for floor or wall mounting and for indoor or outdoor use as detailed in the project specification. All boards shall be totally enclosed.

## 4. NORMATIVE REFERENCES

4.1 The following national and international specifications and standards shall be read in conjunction with this Specification.

Where reference is made to a Code, Specification or Standard, the reference shall be taken to mean the latest edition of the Code, Specification or Standard, including addenda, supplements and revisions thereto, in content or numbering.

| | |
|---|---|
| **General**: | |
| API 2003 | Protection against ignitions arising out of static, lightning and stray currents |
| SABS ISO 9000: | Quality management systems |
| SANS 10086-1 | The installation, inspection and maintenance of equipment used in explosive atmospheres |
| SANS 10089-2 (2007) | The petroleum industry Part 2: Electrical and other installations in the distribution and marketing sector |
| SANS 10142-1 (2012) | The wiring of premises Part 1: Low-voltage installations |
| SANS 10198 - 2004 | The Selection, Handling and Installation of Electric Power Cables of rating not exceeding 33 KV |
| SANS 10313 | The Protection of structures against lightning. |
| **Equipment :** | |
| SANS 1700 | ISO metric black bolts, screws and nuts (hexagon and square) |
| SANS 1019 - 2014 | Standard voltages, currents and insulation levels for electricity supply |
| SANS 1091 - 2012 | National colour standards |
| SANS 1195 | Busbar Systems |
| SANS 1274- 2014 | Coatings applied by the powder-coating process |
| SANS 1507 | Secondary Wiring |
| SANS 1973-1 | Low-voltage switchgear and controlgear ASSEMBLIES Part 1: Type-tested ASSEMBLIES with stated deviations and a rated short-circuit withstand strength above 10 kA |
| SANS 1973-3 | Low-voltage switchgear and controlgear ASSEMBLIES Part 3: Safety of ASSEMBLIES with a rated prospective short-circuit current of up to and including 10 kA |
| SANS 60269 (2014) | Low-voltage fuses |
| SANS 60439-1 | Low-voltage switchgear and controlgear assemblies |
| SANS 60529 | Degrees of protection provided by enclosures (IP Code) |
| SANS 60947-1 (2012) | Low-voltage switchgear and controlgear Part 1: General rules |
| SANS 60947-2 ((2014) | Low-voltage switchgear and controlgear Part 2: Circuit-breakers |
| SANS 60947-3 (2012) | Low-voltage switchgear and controlgear Part 3: Switches, disconnectors, switch-disconnectors and fuse-combination units |

| | |
|---|---|
| SANS 60947-4 (2013) | Low-voltage switchgear and controlgear Part 4 -1;-2;-3: Contactors and motor-starters |
| SANS 60947-5 | Low-voltage switchgear and controlgear Part 5: Control circuit devices and switching elements |
| SANS 61439 | Low-voltage switchgear and controlgear assemblies |
| SANS 61558 | Safety of power transformers, power supplies, reactors and similar products |
| SANS 61643-1 | Low-voltage surge protective devices Part 1: Surge protective devices connected to low-voltage power distribution systems - Requirements and tests |
| SANS 61643-12 | Low-voltage surge protective devices Part 12: Surge protective devices connected to low-voltage power distribution systems - Selection and application principles |
| SANS 61869-1 | Instrument transformers |
| BS 142 | Electrical protection relays |
| BS 159 | Busbars and busbar connections |
| BS 5486 | Low voltage switchgear and controlgear assemblies |
| BS 1433 | Copper for electrical purposes. Rod and bar. |
| BS 3693 | Design of scales and indexes. Part 1. |
| BS 3938 | Current transformers |
| BS 4794 | Control switches. (Switching devices, including contractor relays, for control and auxiliary circuits, for voltages up to and including 1000 V AC and 1200 V DC.) Part 2.20. |
| BS 5472 | Low voltage switchgear and control gear for industrial use. Terminal marking and distinctive numbering. General rules. |
| DIN43620 | Low voltage high rupturing capacity fuses with blade contacts. |
| NRS 002 | Graphical symbols for electrical diagrams |
| VDE 0660 | Regulations for low voltage power fuses (NH fuses) Part 4 |
| Government, local authorities or other statutory bodies' regulations, laws, requirements or customs which are more stringent than those detailed in this specification. | |

4.2 The following standard specifications are to be used for reference purposes and need to be noted by Contractors in order to signify familiarity and compliance with the requirements. It is expected of Contractors that they are familiar with the applicable clauses and that these will be adhered to in the execution of any work in terms of this specification. Contractors will be required to confirm that they are able to meet these requirements.

| | |
|---|---|
| The Occupational Health & Safety (OHS) Act No. 85 of 1993. | |
| SANS 10108: 2014 | The Classification of hazardous locations and the selection of electrical apparatus for use in such locations |
| SANS 60079 | Explosive atmospheres: Part 14: Electrical installations design, selection and erection; Part 17: Electrical installations inspection and maintenance; Part 25: Intrinsically safe electrical systems |

| | |
|---|---|
| API | Manual of Petroleum Measurement Standards Chapters 4 to 12<br>IP Chapter 10 and Papers 2 and 3 |
| SANS 60529 | Degrees of protection provided by enclosures (IP Code) |
| BS 5490 | Classification of degrees of protection provided by enclosures |
| BS 229 | Flameproof enclosures for electrical apparatus |
| BS 1259 | Intrinsically safe electrical apparatus and circuits for use in explosive atmospheres |
| BS 4683 | Electrical apparatus for explosive atmospheres |
| Safety Regulations for Contractors | |
| Technical Instruction No. 16 – Contractors Work Permit Procedures. | |
| VDE Standards | |

4.3 Where no specific rules, regulations, codes or requirements are contained in this specification nor covered by the above mentioned codes, the contractor shall, in consultation with Transnet Pipelines, adhere to internationally accepted modern design and engineering practices in the Petroleum Industry.

## 5. TRANSNET PIPELINES SPECIFICATIONS

5.1 The following Transnet Pipelines standard specifications are to be read in conjunction with this document and require separate statements of compliance, which should be included in the tender documents.

**PL727** Specification for Cable, Racking, Trenching & Earthing Reticulation Codes of Practice

**PL711** Specification for Equipment Cabinets to house Electronic Equipment Safety Regulations for Contractors

## 6. ABBREVIATIONS & DEFINITIONS

6.1 For the purpose of understanding these Standards, the following abbreviations apply.

AC Alternating current

ACB Air Circuit-breaker

ANSI American National Standards Institute

BS British Standard

BSI British Standard Institution

C&I Control and Instrumentation

| | |
|---|---|
| CT | Current Transformer |
| DC | Direct Current |
| DCS | Distributed Control System |
| EDS | Engineering Design System |
| EMC | Electro magnetic compatibility |
| FAT | Factory Acceptance Test |
| fn | Rated frequency |
| HEM | High Efficiency Motor |
| HRC | High Rupturing Capacity |
| IEC | International Electrotechnical Commission |
| IED | Intelligent Electronic Device |
| IEEE | Institute of Electrical and Electronic Engineers |
| IP | Ingress Protection |
| ISO | International Organisation for Standardisation |
| ISA | Instrument Society of America |
| LV | Low Voltage |
| mcb | Miniature Circuit-breaker |
| MCC | Motor Control Centre |
| MCCB | Moulded-Case Circuit-breaker |
| OEM | Original Equipment Manufacturer |
| OHS Act | Occupational Health and Safety ACT |
| PE | Protective Conductor |
| PEN | Combined Protective Earth & Neutral |
| PTTA | Partially Type-tested ASSEMBLY |
| RCC | Regulatory Certificate of Compliance |
| RDF | Rated diversity factor |
| SAT | Site Acceptance Test |

| | |
|---|---|
| SABS | South African Bureau of Standards |
| SANS | South African National Standards |
| SCPD | Short Circuit Protective Device |
| SPD | Surge Protection Device |
| TPL | Transnet Pipelines |
| TTA | Type-tested ASSEMBLY |
| UPS | Uninterruptible Power Supply |
| Ue | Rated operational voltage |
| Uimp | Rated impulse withstand voltage |
| Un | Rated voltage |
| VT | Voltage Transformer |

6.2 The following Definitions are consistent with the Transnet E5 Agreement and General Conditions of Contract and apply to this specification in its entirety.

**CHIEF EXECUTIVE** (Transnet Pipelines) means the officer appointed as Chief Executive (Transnet Pipelines) of Transnet Limited or any person lawfully acting in that capacity.

**ENGINEER** means any officer in the office of the Chief Executive (Transnet Pipelines) deputed by the Chief Executive (Transnet Pipelines) to supervise and take charge of the contract.

**PLANT** means any machine, excluding a tool, and any vehicle, excluding a passenger vehicle, used on site for the carrying out of the Works.

**EQUIPMENT** means any device not forming a permanent part of the Works, used on site for the carrying out of the Works, and also any temporary building, which is required for the carrying out of the Works, and which is erected on site.

**TOOL** means any instrument, powered or otherwise, which is accepted as a hand tool by the industry concerned and which is normally used in a manual operation by an individual labourer, artisan or workman.

**MATERIAL** means any constructional substance or ingredient that shall form part of the permanent Works and the substances in excavations and earthworks.

**DRAWINGS** means the drawings referred to in any specifications, schedule of quantities and prices and any alterations of such drawings made or approved in writing by the Engineer and

such other drawings as may from time to time be furnished or approved in writing by the Engineer.

**SITE** means the land and any other place on, under, over, in or through which the Works are to be executed or carried out and any other land or place made available by Transnet in connection with the Works.

**WORKS** means the works to be executed in accordance with the Contract.

### 6.3 General Definitions

In addition to the definitions of SANS 10142-1; SANS 1973-1; SANS 1973-3 and SANS 60439-1, the following apply:

| | |
|---|---|
| **Approval** | Written agreement or authorization by Transnet Pipelines. All requests for approval shall be submitted in writing and any proposed deviation from specified requirements shall be fully justified and agreed by Transnet Pipelines. |
| **Barrier** | A part providing protection against direct contact from any usual direction of access (minimum IP2X) and against arcs from internal arc faults, if any. |
| **Cable way** | A section of the ASSEMBLY that provides a platform for the routing and termination of cables. |
| **Collection Busbars** | A type-tested intermediate busbar arrangement between the main busbars to distribute power to especially mcb's which are connected in cascaded circuit arrangements. |
| **Data Sheets** | All drawings, tabulations, sketches, and relevant documentation which Transnet Pipelines shall submit with an enquiry, to clearly indicate to a bidder or supplier the technical, electrical and physical requirements of the completed equipment. |
| **Distribution Feeder** | A functional unit supplying power to another low voltage ASSEMBLY either through a cable or step-down transformer. |

| | |
|---|---|
| **Equalizing Busbars** | Busbars to which the incoming or outgoing power electric cables are connected to enable an even distribution of current to the terminals of the protective gear. |
| **Fault-Free Zone** | Zone in ASSEMBLY or section of an ASSEMBLY that comprises the conductors (including distribution busbars) between the main bursars and the supply side of functional units, in which, under normal operating conditions, the occurrence of a short-circuit fault is only a remote possibility. |
| **Padlocking facility (Padloackable)** | Part of the ASSEMBLY or component that allows one to insert a padlock for locking purposes during maintenance. |
| **Type-Tested ASSEMBLY with stated deviations** | An ASSEMBLY System which has been verified by a comprehensive range of tests of worst case scenarios and documented in accordance with an approved Engineering Design System with all type-tests performed in accordance with the requirements of SANS 10142-1, SANS 1973-1 and SANS 60439-1. |
| **Intelligent Electronic Device (IED)** | Microprocessor-based device with the protection, control, monitoring and communication functionalities. |
| **Incomer Unit** | A functional unit through which electrical energy is fed into the ASSEMBLY. |
| **Modular Design** | An ASSEMBLY System which accommodates a variety of section sizes, sub-section sizes, and busbar and cable compartment sizes in such a way that the different combinations has been subjected to all type-tests as prescribed by SANS 1973-1. |
| **Partition** | A part of the enclosure of a compartment separating it from other compartments. |

| | |
|---|---|
| **Protective Gear** | Individual or combinations of circuit-breakers and or switch-disconnectors and or fused switch-disconnectors |
| **Stated Deviations** | Deviations from a type-tested ASSEMBLY which is documented in the Engineering Design System and supported by type-test reports. |
| **Withdrawable Unit** | A functional unit which can be moved from the connected position to the isolated position and to a test position, if any, whilst remaining mechanically attached to the ASSEMBLY. |

## 8. SITE CONDITIONS

8.1 The equipment shall be designed to operate continuously at its rated capacity, at the specified ambient temperature and site elevation conditions as detailed in the datasheets. Typically these conditions are tabulated below:

| | |
|---|---|
| Ambient operating temperature | -5 to 40 °C (Daily average +35 °C) |
| Maximum relative humidity | 0 to 95 % |
| Maximum altitude | 0 to 2000 above sea level |
| Lightning conditions | Severe, max ground flash density 11 flashes per km² per annum |
| Exposure conditions | Salt laden as well as industrial atmosphere |

8.2 **Electrical Conditions.**

8.2.1 The system of supply shall be 3 phase, 4 wire, 50 Hz alternating current with earthed neutral at a nominal voltage of 400/230 Volts.

8.2.2 The voltage may vary within the range of 95% to 105% of the nominal. All equipment installed shall be suitably rated.

8.2.3 The Switchgear Panel, switchgear components, busbar systems and cables shall be adequately rated for prospective fault level ratings. Prospective system fault level requirements shall be obtained from the relevant supply authority, and used to determine switchboard fault levels after making allowances for circuit impedance of associated cables and transformers. It will be the Contractor's responsibility to provide for supply authority requirements when compiling their Offers.

8.2.4 The LV Switchgear and Controlgear ASSEMBLY shall comply with the fundamental safety requirements of Clause 5 of SANS 10142-1.

8.2.5 LV Switchgear and Controlgear ASSEMBLY shall as a minimum be designed, constructed and tested in accordance with the requirements of Clause 6.6 of SANS 10142-1.

8.2.6 All components and electric conductors fitted to the ASSEMBLY shall be certified as safe by means of a valid Regulatory Certificate of Compliance (RCC) in accordance with SANS 10142-1 Table 4.2 or an SABS Mark of approved performance.

8.2.7 ASSEMBLIES shall be fit-for-purpose type-tested low-voltage free-standing metal-enclosed switchgear and controlgear ASSEMBLIES with stated deviations in accordance with the requirements of this Specification, SANS 10142-1, SANS 60439-1, SANS 1973-1 and /or SANS 1973-3. The ASSEMBLIES shall also meet the Transnet Pipelines requirements in terms of safety, operation and maintenance requirements.

8.2.8 ASSEMBLIES shall be constructed only of materials capable of withstanding the mechanical and electrical stresses as well as the effects of humidity which are likely to be encountered in normal service.

8.2.9 The manufacturer shall have conducted full type tests and specified special tests as required at a Third Party Test House accredited by an internationally recognized Accreditation Authority in terms of ISO 17025 in accordance with SANS 60439-1, Table 7 for a reference design and shall be in possession of valid type test report/s not older than 5 years that reflects a reasonable and true outcome of the results. In addition, the type tests shall comply with the latest revisions of the applicable standards. In case a certificate is older than 5 years, proof shall be provided that the design and materials used match that of the type tested ASSEMBLY.

8.2.10 A valid "scope of testing" certificate issued by the Accreditation Authority shall be submitted.

8.2.11 The manufacturer shall be in possession of an Engineering Design System (EDS) as specified in SANS 1973-1, specifically Annex B, in which deviations to meet requirements of this Specification and plant specific requirements (items subject to agreement) as may be detailed in enquiries issued by Transnet Pipelines can be verified and validated.

8.2.12 A type-tested ASSEMBLY with stated deviations would typically be of modular design, extensively type-tested under worst-case conditions of IP Rating, Forms of Separation, a complete range of sizes of sections, sub-sections and busbar compartments. Worst case power losses, highest ratings of protective gear installed, highest possible diversity factors, current ratings, short-time ratings, conditional short-circuit ratings at maximum voltages with type II co-ordinated arrangements, maximum support and busbar

configurations, busbar cross-sectional area, conductors installed in the 'fault-free-zone' etc.

## 9. DRAWINGS AND INSTRUCTIONS

9.1 The Contractor shall issue to the Engineer, documentation as per specific contract requirements. Where not specified, the Contractor shall provide one set of sepias, 3 copies of drawings and 1 electronic media of "As Built" drawings, in their native format, of equipment which have been installed on site.

9.2 Handbooks, spares lists and maintenance instructions shall be issued to the Engineer in triplicate at the time of handing over the equipment.

9.3 All Documentation issued shall be in full compliance with Transnet Pipelines Specification PL100 Drawing Standard and in particular:

- **PL101** Plant & equipment Tag numbering Standards
- **PL102** Equipment, Instrument & Electrical Symbology Standard
- **PL103** General Drawing Standards

9.4 The requirements of the materials, design, layout, fabrication, assembly and erection of Low Voltage Panels / Motor Control Enclosures shall, where relevant, be in accordance with the following Transnet Pipeline approved drawing Typicals forming part of this Specification: -

- LV Panel GA – External Arrangement
- LV Panel GA – Internal Arrangement
- LV Panel Single Line Diagram Typical
- LV Panel Schematics – DOL Starter
- LV Panel Schematics – Star Delta Starter
- LV Panel Schematics – VSD Starter

9.4.1 General arrangement drawings

General arrangement drawings shall be completely dimensioned, showing:

a) Arrangement of equipment
b) Top, front, and side views and cross-sections of the ASSEMBLY.
c) Position of each functional unit and their compartments.
d) Clearances for opening doors.
e) Locations of busbars and distributions.
f) Details on the required openings for the power cables
g) Incoming and outgoing cable termination positions and details.
h) Cable slot positions.
i) The height of all cable glands above floor level
j) Instrument transformers (i.e. VT's and CT's) physical positions.

k) Terminal block locations.
l) Earthing or bonding connections.
m) Mass of transportable sections of equipment
n) Details and position of the holding down bolts
o) Magnitude and disposition of all loads imposed on foundations

9.4.2 Single line diagram

Single line diagram shall show the following:

a) Configuration of the circuits (i.e. incomers and feeders) on the ASSEMBLY.
b) Electrical connection of VT's and CT's
c) Section or sub-section numbers of the different functional units.
d) Mechanical key interlocking design.

9.4.3 Schematic Drawings

Schematic wiring diagrams shall show the following:

a) All protection and control devices and their contacts, each of which shall be labelled with its correct ANSI device function number (i.e. protection and control scheme).
b) Device terminal numbers, terminal block numbers and terminal numbers.
c) All wiring within each functional unit.
d) All internal interconnections, bus wiring, inter ASSEMBLY wiring and connections to external equipment.
e) All control and protection switches
f) Power supply connections
g) Component schedule for each circuit

9.5 All cable and wire sizes, values of resistance, breaking capacity of switches and ratings of equipment shall be clearly specified on a drawing.

9.6 All Electrical symbols shall comply with NRS 002-2000 Graphical Symbols for Electrical Diagrams.

9.7 Prior to commencement of manufacture, design approval shall be obtained from the Engineer. Design approval shall entail as a minimum, the submission of the following documentation:

a. Single Line Drawings.
b. Circuit diagrams of power, control, alarm and indication circuits.
c. Layout of equipment in or on panels, boards and cubicles.
d. Internal wiring diagrams of panels, boards and cubicles showing cable connections to associated equipment.
e. Internal wiring diagrams of any individual specialized components.
f. Equipment and material lists.
g. Panel Fault Level calculations.

9.8 The Contractor should take note that approval of submitted drawings does not relieve the Contractor of any responsibility for errors in design or obvious errors in drawings supplied to him by the Engineer.

## 10. STANDARD OF WORK, EQUIPMENT & MATERIALS

10.1 All work, equipment and materials shall conform to the requirements of the latest edition and amendments of SANS 10142-1 Code of Practice for the Wiring of premises and all other specifications detailed herein.

10.2 All equipment and material used shall be of high quality and the work shall be of a high standard of workmanship, carried out by qualified staff under proper supervision by experienced and competent officers.

10.3 If special tools are required for installation and maintenance, one set per site shall be supplied by the manufacturer.

## 11. CONSTRUCTION OF SWITCHBOARD / DISTRIBUTION PANELS

11.1 **General**

11.1.1 Rated operating voltage: 230/400VAC, 50Hz -5% to +5% of nominal voltage

11.1.2 Control Voltage: 24V DC for ET200 I/O, and all field devices
24V AC for Specialised IT security equipment
230V AC MCC control voltage,
230V AC UPS supply to PLC, PC CPUs.

11.1.3 Type of MCC: Individual fixed cubicles, single sided MCC's with rear access.

11.1.4 Fault level minimum: Design 15kA for 1 second Main Busbars
Actual: Refer to specific requirement.

11.1.5 Manufacturer shall supply SABS test certificates validating the short circuit strength of the Factory Built Assembly according to SANS 60439-1.

11.1.6 MCC to be limited to a peak 400V AC load of 850 Amp unless otherwise specified.

11.1.7 Metal-enclosed Low Voltage (LV) Switchgear and Controlgear ASSEMBLIES shall be designed, manufactured, type-tested, and routine tested in accordance with this Specification, the switchgear schedule accompanying any enquiry document to detail TPL's requirements, and in accordance with the reference documents referred to in Section 3 of this specification.

11.1.8 MCC Construction:

All items shall be made with cold rolled steel.

| | | |
|---|---|---|
| Frames: | Minimum thickness: | **2.5mm** |
| Doors: | Minimum thickness: | **2.0mm** |
| Covers: | Minimum thickness: | **2.0mm** |
| Gland Plates | Minimum thickness: | **2.0mm** |

11.1.9 All doors with cut-outs are to be from 2.0mm thick material, with stiffeners where required.

11.1.10 Unless otherwise specified, all equipment shall be painted and finished using a powder coating process in accordance with SANS 1274- 2014; Table 2 - type 2 (minimum thickness 35 micron).

11.1.11 In general, the following colour standards shall be used, but shall require to be confirmed with the Engineer prior to manufacture:

| | |
|---|---|
| Non-essential switchboards | Light Orange (Colour B26) – SANS 1091 |
| Essential switchboards | Signal Red (Colour A11) – SANS 1091 |
| Uninterruptible Power UPS<br>Mounting Plates<br>Gland Plates | Purple<br>White<br>Zinc Passivated |

11.1.12 LV Switchgear and Controlgear ASSEMBLIES shall be constructed as freestanding, factory built ASSEMBLIES comprising of several sections and subsections with withdrawable and/or fixed functional units.

11.1.13 Unless otherwise specified in the switchgear schedules, ASSEMBLIES shall consist of an enclosure, doors, partitions, main busbars, control busbars, phase and protective earth conductors, functional units and other equipment.

11.1.14 Measures shall be taken to prevent electrolytic corrosion where dissimilar metals are in contact with each other.

11.1.15 All boards, panels and cubicles provided shall be vermin and dust proof with the minimum degree of ingress protection to SANS 60529 being as follows:

i) Inside substation and motor control rooms: IP 42
ii) All other locations: IP 55.

11.1.16 Barriers with an internal degree of protection of at least IP2X shall be provided to prevent accidental contact with live conducting parts of the circuit and to protect the unit from falling objects.

11.1.17 Particular attention shall be given to the ventilation of panels, to eliminate build-up of excessive heat caused by the sun or internal heat generation. All necessary

precautions shall be taken to ensure that the temperature of the air in any portion of the assembly does not rise more than 15°C above ambient air temperature.

11.1.18 All boards shall be so designed to ensure easy access to all control units, wiring etc. Access shall be possible by means of hinged or removable panels, secured to the framework by captive type screws or latches.

11.1.19 For easy access, each cable compartment and each fixed pattern functional unit sub-section shall be provided with individual hinged doors.

11.1.20 All removable covers shall require the use of a tool for their removal. Opening of doors for all mcb groups shall be padlockable.

11.1.21 Doors shall have not less than the following points of hinging:
up to 450mm - 2 hinges,
up to 800mm - 3 hinges
more than 800mm - 4 hinges.

11.1.22 All doors shall be secured by 6mm square key latches as follows:
up to 450 mm - 2 latches,
up to 800 mm – 3 latches and
more than 800 mm – 4 latches
Any other proven design shall be submitted to TPL for approval.

11.1.23 Doors shall have stops to prevent over swing when opening and to avoid interference with adjacent compartments.

11.1.24 Doors of 800mm or longer shall be provided with webs or other methods to prevent wobbling when the door is operated.

11.1.25 Every door shall have a suitable gasket incorporated into the frame to ensure that the arrangement is in accordance with the required degree of protection. Sealing strips and gaskets shall be made of durable, non-hardening rubber, neoprene or other synthetic material, suitably fixed to the door or frame to ensure that the seal does not become dislodged during normal operation.

11.1.26 No circuit breaker toggles shall be permitted to project through the outside of the doors.

11.1.27 Traffolyte Identification labels shall be attached to the front of each door on the panel and will include the equipment Functional and Location Identification tag, descriptor and rating of the equipment located within.
Refer to Section 18 for details on Panel Label Specifications.

11.1.28 Due care shall be taken to ensure that the live side of the MAIN SWITCH is suitably protected so that no live conductors are exposed when the panel door is opened or

the panel cover is removed. Barriers between power terminals shall be robust with high impact strength and made of material that is self-extinguishing or resistant to flame propagation.

11.1.29 All hinges and door handles shall be of the bolted on variety, shall be manufactured from non-ferrous materials or stainless steel, suitably finished and treated against corrosion by an electro-plating process and shall ensure effective electrical bonding to the enclosure is maintained. All hinges are to be of the lift off variety

11.1.30 Where possible the lock and door catch shall comprise of a combination unit. Door latching and delatching operations shall be smooth and quick, whilst ensuring proper compression of the sealing gaskets. Repeated opening and closing of the hinged doors and operations of the door locks and catches shall not cause chipping or scratching of the painted surfaces or any other blemishes to the finished boards. At least the center square key latch shall be padlockable.

11.1.31 Bolts, nuts and washers used throughout the board shall be of stainless steel or brass zinc passivated plated, with the exception of busbar bolts, nuts and lock washers which shall be of stainless high tensile steel or phosphor bronze material. The method of fastening the latches and hinges shall be such that it will not wear loose due to vibration or rough handling of the door.

11.1.32 Lifting lugs shall be provided for equipment lifts heavier than 150 kg.

11.1.33 Removable gland plates shall be provided.

11.1.33.1 These gland plates shall be of adequate thickness or construction for the cables to be terminated without distortion of the gland plate, and shall not be less than 2mm mild steel (zinc passivated).

11.1.33.2 Gland Plates shall not be mounted less than 300mm above ground floor level, alternatively a base frame of suitable depth may be provided.

11.1.33.3 Metal gland plates shall be bonded to the PE conductor by means of a bonding conductor whose cross-section is selected in accordance with SANS 60439-1 Table 3A.

11.1.33.4 The design of the gland plates shall ensure an internal protection of at least IP2X before and after installation of the incoming/outgoing cables

## 11.2 CABLE ENTRY/CABLES

11.2.1 Panels shall be generally of the wall or floor standing cubicle type, suitable for cable entry from the bottom for both power and control cables. Cables shall to be glanded in the rear of the panels in cable compartments (on an individual MCC tier basis) provided. Panels shall be mounted on plinths of height minimum 100mm, sized to accommodate cable bend radius.

11.2.2 Panels shall incorporate rear cable compartments per MCC tier with the exception of the main Incomer tiers.

11.2.3 Cabling running in the rear cable compartments shall be supported at regular intervals. Spacing of these cable supports shall not be larger than the height of the smallest MCC tier.

11.2.4 Conductors passing through holes in compartments shall be protected by means of robust neoprene grommets. Bevelling of steel sheet as a substitute is not acceptable.

11.2.5 Conductors carrying currents in excess of 100 A and passing through metal shall either be all three phases (both poles of DC conductors) or the metal barrier shall be split.

11.2.6 Power circuit cable sizing shall be based on SANS 1973-1 Annex H.

11.2.7 Stripping of insulation shall not result in damage to the conductors, shall result in 90 degrees clean cut and insulation is not damaged.

11.2.8 Power and control terminals are to be mounted in the rear of the panel in vertical orientation.

11.2.9 Correct torque shall be applied when any bolt or screw is tightened.

11.3 **INCOMER PANEL**

11.3.1 The MCC Incomer panel shall be used to house fixed pattern Air Circuit breakers.

11.3.2 Main Incomer cables shall be made off directly onto stub busbars connected to the bottom of the incomer breaker by means of compression lugs.

11.3.3 Panel Incomer front doors shall be earthed and with a minimum of three un-insulated copper braid straps, of not less than 6mm² cross sectional area. The length of these straps shall be kept as short as possible. (<100mm max.). These earth straps shall be connected to the chassis / door with welded studs and without paint between the connection surfaces. (Normally the paint will have to be scraped away).

11.3.4 In an event that more than one core per phase of single or multi-core core cables is terminated in an incomer or feeder compartment, equalising busbars shall be provided to facilitate the connection. The equalising bars shall be adequately rated and braced to withstand the thermal and dynamic stresses under normal, short circuit and internal arc operating conditions and shall have been type tested as part of the assembly for all operating conditions.

11.3.5 Power terminals shall be separated from the control terminals by means of a barrier and shall be fully shrouded to prevent accidental contact.

11.3.6 Access to busbars shall be prevented by sheet steel covers.

11.3.7 Surge Protection Devices shall comply with the requirements of SANS 61643-1 and their selection, connection and application shall be in accordance with SANS 61643-12.

11.3.8 The wiring to the (ZORC) surge protective device shall be kept as short as possible <300mm. The wiring cross section shall be the maximum compatible with the size of the terminal studs and terminal box on the device. A cross section of less than 70mm² (earth cabling included) is not acceptable. Earth cabling shall be terminated directly to the Electrical Earth Bar running the entire length of the LV Panel.

## 11.4 PANEL COMPARTMENTS

11.4.1 Panel Compartments shall comprise of Chassis (Bucket Type) with cable connections directly onto vertical dropper busbars. The chassis (Bucket type) shall be interchangeable with other units of the same external dimensions. All cabling used shall be approved before use. All cable connections to the busbar droppers are to be suitably braced.

11.4.2 Control and PLC Interface wiring shall be routed between the front chassis (cubicles) and the rear cable compartment via slots cut in each cubicle backplane. All Control and PLC Interface wiring shall be run in suitably sized PVC Trunking in both the rear Cable compartment and individual Cubicles. Grommets shall be used to protect cabling running through panel cut outs/slots.

11.4.3 All LV Starter cubicles shall have an external operating handle interlocked with the cubicle door in order that the handle can be padlocked in the Off Position. A door lock defeat release shall be provided in order that authorised personnel may bypass the interlock when the operating handle is in the On position, for testing purposes.

11.4.4 All Panel compartment doors shall be earthed with a minimum of two un-insulated copper braid straps, of not less than 6mm² cross sectional area. The length of these straps shall be kept to be as short as possible. (<100mm max.). These earth straps shall be connected to the chassis / door with welded studs and without paint between the connection surfaces. (Normally the paint will have to be scraped away)

11.4.5 All Spare Compartments shall be arranged as indicated on approved Panel Layout diagrams, but will not need to be equipped. All accessories for the addition of a Starter unit including hinged doors, vertical busbars shall be provided. Dropper power cut outs shall be covered with steel plates.

11.4.6 Where wiring greater than 10mm² is required to be suitably braced, flexible cable (welding type) shall be used.

11.4.7 Where instruments such as ammeters, voltmeters etc. are required, these shall be mounted flush according to instrument type either on a hinged door section or separate compartment to that of the control circuitry (MCB's, fuses etc.)

11.4.8 All instrument wiring shall be contained in a flexible flame retardant sleeving where hinged sections are utilised, and shall be securely clamped to the hinged door and panel to avoid straining the connections on the instruments. All other wiring shall be loomed neatly in suitably sized PVC cable trunking.

11.4.9 Where holes are required in the chassis plates for access to the terminals in the rear, these shall be of adequate size to accommodate the wiring size and quantity for the application. Provision shall be made for additional capacity of 25 %. All panel cut-outs/slots shall be protected by means of suitably sized grommets, to ensure wiring insulation is protected from damage.

11.4.10 Components shall be arranged and mounted in the ASSEMBLY in such a way that maintenance work can be performed in a safe and orderly manner.

11.4.11 Switchgear and control-gear when mounted shall not cause injury during switching.

11.5 **INTERNAL ARC CONFINEMENT**

11.5.1 ASSEMBLIES shall be designed to confine internal arcing faults and to direct arcs and gases arising from these away from the possible operator interface points (i.e. back and front).

11.5.2 Provision shall be made to limit pressure build up and/or re-direct gases resulting from an internal arc fault in any section or sub-section.

11.5.3 Each section of the ASSEMBLY shall be equipped with a pressure activated relief flap that shall direct ionised materials and gases away from the operator interface points.

11.5.4 The two main function of internal arc confinement are to protect the operator in front and also prevent the arc from spreading to any other compartment that might also be energized.

11.6 **BUSBARS**

11.6.1 All boards shall be equipped with a set of 3 x phase, neutral and earth busbars running the entire length of the board within a designated busbar chamber located at the top of the cabinet and continuously rated for the full load of the incoming supply switch. Busbars, risers and droppers shall be air-insulated and shall be fabricated from high-conductivity copper. Aluminium busbars will not be permitted.

11.6.2 Busbars shall be rated for a normal current equal to the incoming circuit rating, designed in accordance with the requirements of SANS 1195/BS 159 and shall comprise

of a standard modular system, tested to SABS standards. Busbars shall be suitably enclosed in a busbar chamber to protect against inadvertent contact with access panels removed.

11.6.3 Busbar Chambers shall be divided into two sections, namely a rear compartment running the full length of the board and used to house both Mains Supply and Emergency Supply busbars, and a front compartment used to house Control Voltage supplies to the respective MCC Tiers. Busbar and Control Voltage chambers shall be suitably enclosed using sheet steel covers/boxing to protect against inadvertent contact. Access to the Busbar Chamber from within the Control Voltage Chambers will be prevented by the use of either sheet steel or transparent PVC covers.

11.6.4 All interconnections between busbars and control units shall be by means of fully insulated, adequately rated conductors firmly bolted to the busbar and secured to the appropriate terminals of the control units using crimped-on terminal lugs. Solid flat conductors shall be used for ratings in excess of 200 Amps.

11.6.5 Termination Points shall be easily accessible, conveniently located near the incoming and outgoing cable entries and with sufficient clearance and space to enable the incoming and outgoing cables to be connected to their corresponding terminals without difficulty or strain.

11.6.6 Terminals of all incoming and outgoing cables shall be firmly connected to terminals provided by means of crimped on terminal lugs or ferrules, unless the terminals are designed to grip the cable without causing the slaying of the conductor strands

11.6.7 The busbar current density shall not exceed 1,3 A/mm². Where relaxation of SANS 1973 has been given to permit the drilling of holes, the cross sectional area of the busbars shall be reduced by the area of the holes in determining compliance.

11.6.8 Busbars and supports shall be constructed to withstand the forces to be encountered on occurrence of fault currents up to the full fault levels specified without reference to the type or speed of operation of the protective devices used. Porcelain or glass supports are not permissible.

11.6.9 Joints and Tee-off connections in busbars shall be made by means of high tensile bolts, nuts and approved locking washers. A minimum of two such bolts shall be used per joint or tee. The joint contact areas shall be smooth, very flat and polished or silver plated for dry pointing. The joints shall not be taped in order to facilitate visual inspection and checking of bolt tensions.

11.6.10 Busbars shall be provided with phase colour markers, red, white, blue. Such colour identification may take the form of coloured bands at intervals along the busbar run of not more than 800 mm. The combined width of the colour bands per phase shall not be less than 300mm per 800mm-busbar lengths.

11.6.11 All covers, whether hinged or bolted, giving access to busbars and incoming circuits shall have the international dangerous voltage symbols placed thereon. In the event of the cover being reversible, symbols shall be placed on both sides of the plates.

11.6.12 Busbars and droppers shall be torqued after installation on site.

## 11.7 NEUTRAL BARS

11.7.1 The neutral bar shall be sized and rated in accordance with the provisions contained within SANS 10142-1. In a multiphase circuit the neutral conductor shall be rated to carry the maximum predictable out-of-balance current under normal operating conditions, with a minimum of 50% cross sectional area of the main busbars. The neutral bar shall be mounted on insulators and connected to the earth bar via means of an adequately rated copper connection. The bar shall be marked black at regular intervals so that identification in each panel section is possible.

11.7.2 A minimum of 6 holes per section is to be provided. High tensile phosphor bronze or passivated plated nuts, bolts and lock washers shall be provided through the earth bar at each earthing position, with at least 25% additional holes being provided for future connections, all fitted with nuts and bolts.

## 11.8 EARTH BARS / EARTHING

11.8.1 Earthing and bonding conductors shall be sized and installed in compliance with regulations detailed in the current SANS 10142 Standard Regulations for the Wiring of Premises and in SANS 10313 as applicable. Conductors shall comprise of multi stranded, PVC insulated cable, of gauge not less than 6mm2, cross sectional area.

11.8.2 All cabinet/cubicle doors shall be earthed to the panel earth using a braided copper conductor of not less than 6mm², cross-sectional area.

11.8.3 Each cabinet shall make provision for a suitable 'electrical earth' to be installed within the busbar chamber and comprising of a solid 50 x 5mm min copper bar running the entire length of the cabinet. The bar shall be bolted to the base framework with a minimum clearance of 40mm from the other busbars.

11.8.4 The following equipment shall be earthed directly to the electrical earth bar, via adequately sized PVC insulated copper cabling (green/yellow):

a. Electrical equipment housings/backplanes. (Where earth terminals have been provided, the earth wiring cross section shall be the maximum compatible with the size of the terminals provided. Where earth studs have been provided, the earth wiring cross section shall be in compliance with manufacturer's recommendations. Where not specified, earth cable cross sectional areas shall not be less than 6mm²).

b. Cable overall screens.

c. Electrical Power cable earth cores.
d. Cabinet chassis.
e. Transorbs. (Earth cable cross-sectional area 70-mm² min).

11.8.5 Where required, cabinets shall make provision for a suitable "instrument earth" to be installed at the bottom of the respective cabinet tier and comprising of a solid copper bar (50mm x 5mm). The bar shall be supported on robust insulated spacers, with a minimum clearance of 40mm to the sheet steel panel, and clearly labelled. The instrument or clean earth shall be insulated from the panel at all times.

11.8.6 The following equipment shall be earthed directly to the instrument earth bar, via adequately sized PVC insulated copper cabling (blue):
a. 24 V DC Power supply common rail.
b. Barrier/Isolator earth (Earth cable cross sectional area 70 mm2 min).
c. Cable individual screens

11.8.7 Earth bar specifications shall comply with the following:
a. Size: 50mm x 5mm x full length of MCC.
b. Marking: Yellow/Green (Electrical) and Blue (Instrument) at regular intervals, so that identification from each panel section is possible.

11.8.8 A minimum of 6 holes per section is to be provided. High tensile phosphor bronze or passivated plated nuts, bolts and lock washers shall be provided through the earth bar at each earthing position, with at least 25% additional holes being provided for future connections, all fitted with nuts and bolts.

11.8.9 Sufficient number of holes to be provided on bus sections for all outgoing circuits & 20% spare for double cables.

11.8.10 All panel cubicles to be bonded to each other and to the Main earth bar.

11.8.11 All metal housings must be earthed.

## 11.9 CONDUCTORS INSTALLED IN THE "FAULT-FREE" ZONE

11.9.1 Cable installed between the main or distribution busbars and the functional units are deemed to be unprotected "active" conductors and shall be installed and braced in such a manner that a short-circuit is unlikely to occur. The smallest conductor that may be installed in the 'fault-free-zone' is 16 mm² for Assemblies >10kA and 10mm² for Assemblies ≤10kA a detailed in SANS 1973-1 and SANS 1973-3 respectively.

11.9.2 Conductors installed in the 'fault-free-zone' shall be braced at intervals not exceeding 300 mm.

11.9.3 Conductors installed within a fault-free zone, where they could come in contact with conducting parts, shall be protected by supplementary insulation (double insulated).

## 12. CONTROL TRANSFORMERS / CONTROL VOLTAGE DISTRIBUTION

12.1 Provision shall be made in the LV Panel design for the supply and installation of dual 400/230V 1Ph:1Ph Constant Voltage Transformers of suitable rating in a bypass configuration. Dual 400/230V 3Ph:1Ph CVT's may be provided where load balancing across phases is deemed a requirement.
CVT's shall be installed externally to the LV Panel and shall be fed from the Emergency Busbar / Standby Alternator Supply where available.

12.2 Where MV Starter Control & Tripping Voltage distribution is fed off of Normal/ESKOM Supply in the LV Panel, provision shall be made in the LV Panel design for the supply and installation of 400/230V 1Ph:1Ph Constant Voltage Transformers of suitable rating in a bypass configuration. CVT's shall be installed in the MV Starter Control Voltage Feeder Cubicle within the LV Panel.

12.3 Individual 230V~ Control Voltage distribution (other than Auxiliary Motor Starters) shall be fed from suitably rated double pole MCB's located in the Control Voltage Distribution Cubicle.

12.4 Motor Starter Control Voltage Distribution shall be fed from the Control Voltage Incomer directly to the respective Starter cubicles, via knife-edge disconnect terminals (both Live and Neutral) located in the Control Voltage Busbar compartment at the top of the respective MCC tiers. The control voltage disconnect terminals are to be installed in the starter panel sections only.

12.5 Provision shall be made in the LV Panel design to incorporate a 230V/230VAC UPS of adequate rating in a by-pass configuration (unless specifically stated otherwise in Contract Documentation). This UPS feed shall be used to power all Control System Equipment located in associated MV panels, LV panels and PLC Equipment Panels.

## 13. TERMINAL / WIRING SPECIFICATIONS

13.1 Terminals used for control and power (where required) marshalling shall be of the Klippon Type RSF1 or equivalent and shall be sized for the cross section of the incoming cable but not less than 4mm$^2$. Where power cabling exceeds 10mm2 (and hence RSF1 terminals cannot be used), Klippon SAKD or equivalent terminals may be utilised.
Terminals used for PLC I/O marshalling shall be of the Klippon Type RSF1 or equivalent and shall be sized for the cross section of the incoming cable but not less than 2.5mm$^2$.

13.2 Terminal end plates shall be provided on the first and last terminal of a terminal strip.

13.3 End stops shall be provided on the first and last terminal of a terminal strip.

13.4 Terminal barriers shall be fitted between terminals with different voltage levels.

13.5 All termination arrangement not in accordance with IP2X shall be provided with separate covers to act as shroud so that accidental contact is impossible when making off adjacent cables.

13.6 A maximum of 1 wire per termination side will be accepted (Except for I/O panels).

13.7 Wires terminated into terminals shall be properly lugged with the correct size lug used for the specific application - bootlace ferrules shall be used for pressure type terminals, with ring and spade lugs used for post type terminals.

13.8 Terminal arrangement and numbering shall be arranged in accordance with approved termination schedules. Terminals shall be numbered on both sides.

13.9 Terminal Rails shall be mounted with bolts or screws with tapped holes.

13.10 Spacing requirements between terminals and PVC Trunking shall be sized to accommodate core idents, with a minimum of 50mm allocated.

13.11 Internal Panel Wiring specifications:

| | |
|---|---|
| All control wiring to be 600V Insulation. | |
| Control wiring: | 230V AC ≥ 1.5 mm² min multistrand at 600V max. |
| Direct ET200 I/O | |
| PLC I/O wiring – from terminals: | 0.5-0.75mm² fine multistrand wires at 300V max. |
| PLC Power Distribution wiring: | 230 AC ≥ 1.5 mm² multistrand at 600V max. |
| | 24 DC ≥1.0 mm² multistrands at 300V max. |

13.12 All control wiring to be colour coded as follows:

| **230V AC Supply** | |
|---|---|
| Live | Brown |
| Neutral | Black |
| Earth | Green/Yellow |

| **230V Switchgear Control Circuits** | |
|---|---|
| Live | Brown |
| Neutral | Black |
| Control Circuit | Grey |

| | |
|---|---|
| Earth | Green/Yellow |

| | |
|---|---|
| 24V AC/DC Distribution: | Red and the symbol "+" or 24V AC |
| | Black and the symbol "-" or 24V AC |

| PLC and ET200 I/O Distribution: | |
|---|---|
| Digital Inputs/Outputs | -Grey |
| Analogue Inputs/ Outputs | -Violet (+) |
| | -White (-) |
| Power Earth / Panel Earth | Green / Yellow |

13.13 Conductors of CT and VT circuits shall bear the phase colours. The neutral conductor shall be coloured BLACK.

13.14 Where pre-manufactured plug arrangements are supplied, the manufacturers standard colour may be used.

13.15 Cable Identification Standards: Refer to Transnet Pipelines Specification PL727 Section 8.5.

13.16 Core Ident Standards: Refer to Transnet Pipelines Specification PL727 Section 8.6.

13.17 All AC Input Wiring to D.C. Power Supplies and Transducers shall be twisted.

## 14. WIRING STANDARDS

### 14.1 Power Circuits

14.1.1 Connections between all switchgear components and busbars shall comprise of modular PVC insulated laminated high conductivity copper bars or where current and fault ratings allow, heavy duty coloured PVC insulated stranded, annealed copper conductors, complete with crimped bolted lugs.

14.1.2 Colours to be used in all instances shall be red, white and blue for phase connections, black for neutral connections and yellow/green for earth connections.

14.1.3 Conductors for power conductors shall bear the face colour along the entire length of the phase to which they are connected or may be used in a common colour provided they are phase colour coded at each end of the conductor and at every connection point.

14.1.4 All cabling and connections will be sized and rated in accordance with the relevant SANS Specifications, and as a minimum will suit the maximum full load current of the

circuit breaker/fuses protecting the circuit. Minimum size of stranded conductors will be 2.5mm².

14.1.5 Unless stipulated elsewhere in Contract Documentation, all field Power cabling, inclusive of phase, neutral and earth connections, shall be terminated directly into adequately rated terminals provided in the rear of the panel cubicles/tiers and from there to the relevant ACB's, MCB's, Fuse Holders, busbars etc. Where cables exceed 70mm², connections shall be made directly onto the relevant ACB, MCB or Fuse Holder. Rating of terminals used shall exceed full load ratings by 50 % minimum.

14.2 **Control Circuits**

14.2.1 Wiring shall be comprise of multistrand, single-core PVC-insulated copper conductors, 660/1000 V grade (minimum), to SANS 1507, sized and derated where required for the currents to be carried. Single-strand conductors shall not be permitted and no conductor shall be less than 1,5mm² cross-sectional area, nor be of less than 7 strands in lay.

14.2.2 All conductors shall be identified by means of a core identification number, in conformity with the approved circuit and connection diagrams. No core ident number shall be used more than once in each panel except where electrically identical. Wires/conductors shall have the same number on either end of the wire and all wires, which are electrically identical, shall have the same wire number.

14.2.3 All circuit diagrams shall clearly identify all wire numbers on all termination/connection points.

14.2.4 Transnet Pipelines have standardised on Crutchley core ident numbering markers for electrical control wiring core identification. Core Idents shall be correctly sized to ensure a snug fit on the conductor.

14.2.5 For details of Transnet Pipelines Core Ident Numbering Standards refer to Transnet Pipelines Specification PL727 Rev 6 Section 8.6.

14.2.6 Common Terminal strips of suitable rating shall be provided at all cable and wiring entry points between Switchgear Cubicles, both front and rear, to accommodate all PVC wiring having a cross-sectional area of up to 70 mm². Allowance shall be made on these terminal strips to accommodate 25 % spare capacity minimum. Where cables exceed 70mm², connections shall be made directly onto the relevant ACB, MCB or Fuse Holder.

14.2.7 Where terminal strips are associated with the same circuit (e.g. wiring running between the front and rear of a cubicle shall be terminated into terminal rails provided), these terminal strips shall be identical in layout and terminal allocation, for ease of maintenance.

14.2.8 Rating of terminals used shall exceed full load ratings of the protection circuit by 50 % minimum. Terminals used shall incorporate spring-loaded clamping arrangements. Transnet Pipelines have standardised on "KLIPPON" type RSF 1 or equivalents.

14.2.9 Wiring for voltmeters shall be arranged in such a way that the ASSEMBLY's Fault-Free Zone integrity will not be impaired, as detailed in section 11.9 of this specification.

14.3 **Cable Glanding**

14.3.1 Unless stated otherwise, all cabling, inclusive of power, control, data and instrument shall be bottom entry. Cable entry shall be via pre-punched gland plates, and shall be glanded within the cabinet to which the associated cable is terminated. Glanding of cables in cabinets different to that in which the cable is terminated shall not be permitted. Spare cable entries shall be plugged using appropriately sized blanking plugs. The use of "push-out" blanking inserts to plug cable entries shall not be permitted.

14.3.2 Cable identification (panels within buildings) shall be as follows:

a) Where Cable Tags are fixed to the cable within Electrical Panels:
Grafoplast Trasp Series 130 Gull-wing transparent PVC sleeves (30mm in length), with printed text black on white background, fastened onto the cable via means of Stainless Steel cable ties. Text height to be 3mm minimum.

b) Where Cable Tags are fixed to the cable outside of Electrical Panels:
Grafoplast Targa Metal TGT System (Carrier Rail length: 58mm for 7 characters, 82mm for 11 characters, 106mm for 15 characters) 316 Stainless Steel Markers, with punched text 6 mm height minimum, fastened onto the cable via means of Stainless Steel cable ties.

14.4 **Screening and EMC Measures**

14.4.1 Connecting of Screen Cables:
Electrical and Instrument Overall Cable Screen wires shall be attached to electrical earth/screen bar at point of entry into panel.

14.4.2 All Screen cables shall be routed to the point of connection and may only be stripped back to enable practical connection of the cores. The cable ends with exposed screen braid shall be covered with a suitably sized insulation sleeving to prevent inadvertent contact. Cable ends shall be protected against ingress of moisture using heat shrink sleeving.

14.4.3 Instrument cable pairs shall remain twisted up to the point of connection.

14.4.4 Screen cable and panel wiring routing:

All cabling and panel wiring shall be routed in PVC trunking mounted against a back plate. Unsupported wire connections of more than 50 mm apart shall not be permitted.

14.5 **Trunking**

14.5.1 Sizing of PVC Trunking and related conductors shall comply with SABS 0142 of 1981 code of Practice Reg. 5.4.1 (f). In addition to the above requirements an additional 25% Spare capacity shall be allowed. The manufacturer shall ensure that all trunking is adequately sized.

14.5.2 Allowance shall be made during LV Cabinet Layout design to ensure that a minimum distance of 50mm is maintained between terminals and PVC Trunking, in order to ensure that conductor core idents are visible at all times.
The manufacturer shall also ensure that a space of not less than 50mm shall be maintained between trunking and any component or object.

14.5.3 Transnet Pipelines has standardised on PVC slotted trunking for use in cable and wiring marshalling
(Non IS circuits – grey in colour, IS circuits – blue in colour).

14.6 **Valve Panel Wiring**

14.6.1 Valve cables shall be glanded in the rear of the Valve Panels in gland plates located at the bottom of the panels above the plinth. Cabling shall be marshaled neatly within slotted trunking provided running up the sides of the panel tiers, the full length of the cabinet. Individual cable cores shall be terminated directly into MCB's provided. Inner PVC sheaths shall be removed before the cable enters the PVC trunking.

14.6.2 Wire ways located within the trunking will permit power cabling to pass from the front of the cabinet to the rear and shall be protected from damage via robust neoprene grommets. Bevelling of steel sheet as a substitute is not acceptable.

14.6.3 A minimum of 500mm excess length of cable shall be provided before the cable is glanded, for future re-termination of the cabling.

14.6.4 PVC Trunking shall be sized to handle 25% spare capacity.

14.6.5 For maintenance purposes, padlocking facilities shall be installed for all switch disconnection devices and provided both on the outside and the inside of the section or sub-section to lock the switch-disconnecting device in the isolated position.

14.7 **LV Distribution/Starter Panel Wiring**

14.7.1 Power and control cabling shall be glanded in the rear of the LV Panels in gland plates located at the bottom of the panels above the plinth. Cabling shall be marshaled neatly within slotted trunking provided running up the sides of the panel tiers, the full length of the cabinet. At the point of termination, the individual cable cores shall be terminated into vertically orientated terminals provided. Inner PVC sheaths shall be removed before the cable enters the PVC trunking.

14.7.2 Note that the cables shall be glanded in such a manner so as to ensure that cables do not cross from the point of glanding to the point of termination. A minimum of 500mm excess length of cable shall be provided before the cable is glanded, for future re-termination of the cabling.

14.7.3 Wire ways will permit control and power wiring to pass from the front of the cabinet to the rear - and shall be protected from damage via robust neoprene grommets. Bevelling of steel sheet as a substitute is not acceptable.

14.8 **ET 200 I/O Panel Wiring**

14.8.1 I/O INTERFACE SIGNALS – CONTROL SYSTEM

The following hard wired I/O signals are to be provided for interface with the PLC Control System:

LV PANEL GENERAL:

(Status: F31 breaker open, no voltage; UPS online, no fault; PLC PSU no alarm)

| | | | |
|---|---|---|---|
| a. | F31 Breaker Closed status | CL | = 0 |
| b. | Loss of supply voltage | UV | = 0 |
| c. | UPS Status - Fault | FLT | = 0 |
| d. | UPS Status - Bypass | BYP | = 1 |
| e. | PLC PSU Status | FA | = 1 |

14.8.2 Discrete and analogue signals are to be clearly separated and identified in the Cabinets. Termination rails shall be divided into units on the basis of ET I/O Card Rack and Slot position.

14.8.3 Each conductor/core of a cable shall be fitted with an insulated double crimp lug of the correct size. LeGrand bootlace ferrules shall be used for pressure type terminals, with ring and spade lugs used for post type terminals.

14.8.4 Proprietary type wire strippers and crimping tools must always be used.

14.8.5 Each conductor shall be identified by a Core Identification number, which shall include the number of the terminal into which the core is to be terminated.
For details of Transnet Pipelines Core Ident Numbering Standards refer to Transnet Pipelines Specification PL727 Section 8.6.

14.8.6 All terminals shall be numbered on both sides and consecutively in accordance with design documentation. All terminal rails shall be identified by means of a terminal rail label situated at the top of the termination rail. End stops and end plates shall be used to prevent inadvertent contact with conducting surfaces.

14.8.7 All spare cores shall be terminated and identified as "spare".

14.8.8 Surge Protection:
Transnet Pipelines Pump Stations are situated in areas of high risk in terms of lightning strikes and thus adequate Surge Protection shall be required to be provided by the Contractor. Contractors are to note that responsibility for the provision of adequate surge protection lies with the Contractor and that Transnet Pipelines will not regard damage to equipment resulting from a lightning strike or power surge as unavoidable, except in instances of a "direct strike".

## 15. EQUIPMENT SPECIFICATIONS

Cognisance shall be taken of manufacturers derating tables for equipment located within enclosures and equipment shall be rated accordingly.

### 15.1 Fuse Switches

15.1.1 Fuse Switches shall be utilised only under circumstances where single phasing may be tolerated. Where single phasing may not be tolerated, only VCB's and MCB's may be utilised.

15.1.2 Combination fuse switches shall comply with SANS 60947-3 and shall be of the individually metal enclosed, triple pole, quick break, dustproof, and withdrawable type, with neutral link. Fuse switches shall afford minimum protection of IP21 or IEC 61032. Combination fuse switches shall be rated for uninterrupted duty and shall be of utilization category AC-23 as detailed in SANS 60947-3.

15.1.3 Fuse Switches shall have a lever or rotary action with a positive spring controlled opening and closing action for making or breaking the circuit under load conditions. Fuse carrier and base contacts shall be designed to give permanent high contact pressure and shall be designed to facilitate location of blown fuses without removal of the carrier. Fuse carriers and bases shall be of the highest grade phenolic mouldings to BS 771 and shall be non-flammable and non-hygroscopic, with a hard gloss black finish.

15.1.4 Three spare fuses of each rating shall be provided and fixed into a suitable cubicle on the switchboard. The door of this cubicle shall be suitably identified.

15.1.5 Switches shall be interlocked to prevent the opening of the front covers unless the switches are in the "Off" position and the closing of the switches with the covers open.

The switches shall be lockable in the "Off" position. (For details on the Switch Mechanisms, refer to Section 10.3. of this specification).

15.1.6 Switches shall comply with the following provisions:

- Double break contact on each pole
- Arc barriers on each pole
- Silver plated copper contacts
- Neutral link where required
- Mechanically operated ON/OFF indicator
- Auxiliary switch facility
- Full interchange ability of equivalent rated units

15.2 **HRC Fuse Links**

15.2.1 HRC Fuse Links shall be of the high rupturing capacity type, compliant with SANS 60947-3. Fuse links shall incorporate a visual indication device to facilitate location of blown fuses and shall be designed to clip into the fuse carrier contacts without the use of fixing screws.

15.2.2 Breaking capacity of all fuse links shall be not less than Category of duty AC.50 at 415 Volts (SANS 60947-3). The Fusing factor of the fuses shall not exceed 1.5 (SANS 60947-3 Class Q1).

15.2.3 Fuse current ratings shall be indicated on engraved 20 x 12mm white-black-white trifoliate labels in 4mm letters. The labels are to be fitted at the fuse bases and shall not be obscured by wiring.

15.2.4 Fifty- percent spare fuses of each size shall be provided in suitable cubicle on the switchboard. The door of this cubicle shall be suitably identified.

15.3 **Air Circuit Breakers**

15.3.1 Air Circuit Breakers shall be used on the incoming supply side of the distribution board and shall comply with SANS 60947-2. Transnet Pipelines have standardised on withdrawable type Circuit Breakers for all Panels rated >= 400 A, and moulded case Circuit Breakers for Panels rated < 400 Amps.

15.3.2 Circuit Breakers shall have a continuous enclosed current rating as indicated on the relevant drawings, with a minimum fault capacity of 50 kA at 415 Volts for I sec, tested for category p.2, unless otherwise specified. All switchgear supplied shall be rated for Type 2 Co-ordination (SANS/IEC 60947-4-1) i.e. capable of renewed operation after testing at rated conditional short-circuit current.

15.3.3 Air Circuit Breakers shall be of the enclosed, ventilated, independent manual spring, draw out or permanently mounted type rated for 660 Volts and shall be suitably equipped for shunt tripping from a DC Battery supply (either 50 VDC or 110 VDC).

15.3.4 Shunt tripping facilities shall be provided; such that will cause the associated high voltage transformer circuit breaker to trip when the associated air circuit breaker is tripped (to protect against fault conditions) unless otherwise specified.

15.3.5 Adjustable inverse definite minimum time (IDMT) overcurrent release facilities are required in addition to the instantaneous fault trip for the air circuit breakers.

15.3.6 Mechanical interlocks shall be provided to prevent draw out type circuit breakers from being racked in or out when closed.

15.3.7 All circuit breakers shall be provided with mechanical position indicators for both the on and off positions.

15.4 **Moulded Case Circuit Breakers.**

15.4.1 Moulded Case Circuit Breakers (MCCB's) shall be of the fixed pattern, multi-pole, free handle, air-break, non adjustable type, housed in a moulded phenolic or glass polyester case and suitable for panel mounting, and shall comply with SANS 60947-2.

15.4.2 Circuit Breaker contacts shall be made of silver alloy, with arc chutes and blowouts provided.

15.4.3 Incoming terminals of miniature circuit breakers shall be suitable for connection to a common busbar. No looped wiring shall be permitted. Miniature Circuit Breakers shall be utilised for general-purpose applications, controlling of mixed circuits of lighting, heating and actuator motors. Ganged toggles shall not be permitted to be utilised.

15.4.4 Switch operating mechanisms shall be provided for CFS's, moulded case circuit breakers (on Panel Incomers only) and motor protection circuit breakers and shall comply with the following:

- Switch operating mechanisms shall be door mounted and the switches fixed mounted.
- Switch operating mechanisms shall positively engage with the switch shaft with the door fully closed and shall be interlocked with the door so that:

i) It shall not be possible to gain access via a cover or door to any live points unless the switch is in the open position.

ii) It shall not be possible to re-close the door or cover unless the switch is in the open position. Operation of the switch with the door open is permissible.

iii) Clear indication shall be given, both with the access cover/door open/closed, as to whether the switch is in the open or closed position. This indication shall be

via internationally accepted symbols i.e. I (ON) and O (OFF). Colour indication alone will not be acceptable.

iv) Operating handles shall be pad lockable in the "off' position. The mechanisms shall accept not less than two padlocks each having a shackle diameter of 6mm.

15.4.5 Circuit Breakers shall have a continuous current rating, trip rating and rupturing capacity as defined on approved engineering drawings. Operating characteristics (curves) shall be selected to suit the particular application. All breakers shall have a minimum breaking capacity of Class SABS 5 kA. All switchgear supplied shall be rated for Type 2 Co-ordination (SANS/IEC 60947-4-1) i.e. capable of renewed operation after testing at rated conditional short-circuit current.

15.4.6 The full load current rating of the current limiting circuit breakers shall not exceed 100A where current limiting circuit breakers are used to protect 5 kA circuit breakers to SANS 60947-2.

15.5 **Miniature circuit breakers**

15.5.1 Miniature circuit breakers (mcb's) shall comply with the requirements of SANS 556-1 and SANS 60947-2.

15.5.2 Provision shall be made for mcb's applied on multiple or single phase distribution sections or sub-sections to be operated from the front of the ASSEMBLY and this shall only be possible after opening the front door.

15.5.3 With regards to lockable isolating devices, a mechanical hinged pad lockable device shall be installed to disable operation of each of the mcb's individually.

15.5.4 Mcb's shall be of the non-adjustable type.

15.5.5 Where cascading is required, the mcb's shall be certified by the OEM that the mcb's will be protected by the upstream switching device using proven cascading methods.

15.6 **Residual current circuit breakers**

15.6.1 Residual current (earth leakage) circuit-breakers shall comply with SANS 767-1 and SANS 60947-2.

15.7 **Contactors**

15.7.1 Contactors shall be that of triple-pole electro-mechanically operated air-break type, with a held in pattern unless otherwise specified. Contractors shall comply with the requirements of SANS 60947-4-1 and shall withstand the thermal and dynamic effects arising from the magnitude and duration of through fault currents as dictated by the characteristics of the associated protective devices.

15.7.2 Contractors shall be classified as utilisation category AC3 uninterrupted duty for motor starting and as utilisation category AC1 intermittent duty, Class 1, 60% for heater duty. All switchgear supplied shall be rated for Type 2 Co-ordination (SANS/IEC 60947-4-1) i.e. capable of renewed operation after testing at rated conditional short-circuit current.

15.7.3 Contactors shall be fitted with the required auxiliary contacts as indicated on the circuit diagrams. These shall be rated at not less than 10 A and shall be positively driven in both directions.

15.8 **Anti Condensation Heaters**

15.8.1 Anti Condensation Heaters shall be provided when called for in the project specification. A suitably rated circuit breaker shall be provided to control the heaters and protect the circuit.

15.8.2 Anti Condensation Heaters shall be powered from 230V AC. Wiring from the heater elements to terminals shall be of the high temperature, insulation covered variety.

15.9 **Motor Starters**

15.9.1 Motor starters shall comply with SANS 60947-4-1.

15.9.2 Motors starters supplying Ex "d' motors shall comply with SANS 60079-14, clause 11.2.

15.9.3 LV motors (typically operating at 400V) shall be controlled using Transnet Pipelines approved Type 2 coordinated motor starter combinations.

15.9.4 LV motor protective devices shall as a minimum cater for the following:

a. Rated short circuit protection
b. Thermal overload with single phasing protection (motors rated up to 55kW only).
c. Electronic motor protection (motors rated 75kW and above only).

15.9.5 Typical Transnet Pipelines LV motor starting philosophy is as follows:

a. LV motors ≤ 15kW DOL starting
b. LV motors > 15kW –VSD's / Soft Starter

## 16. INSTRUMENT SPECIFICATIONS

All instruments shall be of a matching, flush pattern of dial dimensions 96mm x 96mm, with calibrated scale lengths of 70 mm minimum.

16.1 **Ammeters**

16.1.1 Combined maximum demand ammeters shall be used on major circuits only, all others being instantaneous current ammeters to suit load conditions.

16.1.2 Combined maximum demand type ammeters shall be of the moving iron type, showing instantaneous current, combined with an ambient corrected, manually reset, thermal maximum indicating ammeter, indicating the mean current reached during any 15 minute period. All three indications shall be given on concentric scales. Window cut-out scales are not acceptable. All maximum demand meters shall be fitted with a current transformer of 1 Amp secondary, unless otherwise specified. All maximum demand meters shall be fitted with a saturation transformer and marked with the appropriate phase colour to which it is connected.

16.1.3 Instantaneous current ammeters shall be of the moving iron type, showing instantaneous current. CT operated ammeters shall be 1 A full scale, calibrated to read actual primary circuit currents. The CT ratio shall be indicated on the face plate. A zero adjustment screw shall be provided. Full load or rated current shall be clearly indicated, preferably with a red line. Unless specified to the contrary, a 100% condensed over scale shall be provided for instantaneous reading instruments.

16.1.4 All ammeters shall incorporate an adjustable red pointer.

16.1.5 The intrinsic error, expressed in terms of the fiducial value on accordance with IEC 60051, shall be class 1,5 for the instantaneous readings and class 2,5 for the mean maxima.

16.2 **Voltmeters**

16.2.1 Voltmeters shall comprise of the moving iron, suppressed zero type, having a full scale deflection of not less than 480 Volts, unless otherwise specified. Voltmeters shall comply with IEC 60051 and BSS 89.

16.2.2 Where specified, a Selector Switch shall be provided enabling phase to phase, phase to neutral and off selection. The switch shall have a positive locating mechanism, and indicator plate included. The indicator plate shall have the positions "R-W", "W-B", "B-R" and "off" engraved on it.

16.3 **Current Transformers**

16.3.1 Current transformers shall be designed, constructed and tested in accordance with the requirements of SANS 61869-1; SANS 61869-2; IEC 60044-1, BS 3938 and BS 3941 respectively. Current transformers shall be on the low-impedance type and shall, where ratio, class and output requirements permit, preferably be of the ring-type bar-primary design.

16.3.2 Secondary windings of current transformers shall be earthed at one point only. Each group of current transformers (i.e. protection, metering, etc.) shall be earthed by means of bolted or insertion clamp, spring loaded terminal to the PE conductor.

16.3.3 Current transformers for ammeters and metering purposes shall be of 1A secondary unless otherwise specified. The rated output shall be selected according to the requirements of the driven circuit but shall not be less than 5 VA.

16.3.4 Current Transformers shall have accuracy's as detailed below, unless stated otherwise:

| | | |
|---|---|---|
| Indicating Instruments | (ammeters) | Class 5 or 3 |
| KW Hour Meters | (commercial grade) | Class 1 or 0.55. |
| | (precision) | Class 0.5 or 0.2 |
| Protection Relays | | Class 10P5 or 10P10 |

16.3.5 Instrument transformer rating plates shall be duplicated on the main incomers of an ASSEMBLY. These duplicate plates shall be located on the sidewall of the relay compartment or adjacent to the cable termination (when the protection relay is remote from the ASSEMBLY) and shall identify the phase to which the current transformer is connected

16.4 **Voltage Transformers**

16.4.1 Voltage transformers shall comprise of the single-phase double wound type with an earth screen winding and shall be either air insulated or cast epoxy-resin encapsulated, in accordance with the requirements of SANS 61869-3; BS 3938 and BS 3941. Voltage adjustments over the range 95 – 105% of normal ratio shall be provided by off-circuit tappings.

16.4.2 Voltage Transformers shall be provided with isolating switches on the HV side and with protection on both the HV and LV sides.

16.4.3 Control transformers shall be rated as follows:
(Sealed-in burden of all contactors, relays, timers and lamps fed from the unit) + (Pickup burden of largest Contactor fed from the unit) + 10%.

The regulation on closing of the largest circuit with all the loads imposed on the transformer shall not exceed 5%.

One side of the transformer secondary winding or the star point shall be connected to earth via a removable bolted link.

16.4.4 Conductors that connect VT's to the busbars shall be protected by suitable fuses installed close to the busbars. The fuses used shall be accessible without the use of tools to open covers.

16.5 **Aux Relays, Pushbuttons, Indicator Lamps**

16.5.1 Auxiliary relays for control purposes shall be of the multiple pole type with the following features:

a. Positive-acting mechanical retaining clips. Contact friction alone, as a retaining method is unacceptable.
b. A keyed member on plug and socket sides to prevent incorrect insertion.
c. Clear and indelible markings on both the relay and base indicating the circuit reference in conformity with the associated circuit and connection diagram.

16.5.2 Pushbutton and selector switches shall comprise of the one-hole fixing, oil tight pattern and shall be keyed to prevent rotation of the assembly in the panel. Contacts shall be adequately rated for the circuit duty but shall not be less than 10 A, 230V AC or 120V DC rating.

16.5.3 Pushbutton operators shall be coloured to indicate their function as follows:

| | |
|---|---|
| Green | To indicate action e.g. “start”, “forward”, “reverse”, “up”, “down”, “close” or to close a circuit. |
| Red | To stop a function e.g. “stop”, “open”, * or to open a circuit. |
| Black | Test functions only |

In addition the operator shall carry an internationally acceptable symbol indicating its function and shall have mounted immediately above it a clear legend of its function or action.

16.5.4 Indicating lamps shall be continuously rated for a voltage of 10% in excess of the rated voltage. The LED indicator and lens assembly shall be replaceable from the exterior of the panel and shall be possible to execute this operation without the use of any special tools.

16.5.5 Indicating lamp tools shall follow the following standard:

| | |
|---|---|
| Red | Circuit off i.e. open*, motor stopped, etc. |
| Green | Circuit in operation, i.e. closed*, motor running, etc. |
| Amber | Alarm condition, trip indication. |

Indicating lamps shall render good visibility under conditions of an ambient illumination level of 400 Lux.

## 17. INSTALLATION

### 17.1 General

17.1.1 All Assemblies, including Motor Control Centres shall comply with the requirements of SANS 60439-1 Low-voltage Switchgear and Controlgear Assemblies.

17.1.2 The internal separation of circuits shall be either Form 3b or Form 4 to SANS 60439-1 (refer paragraph 7.7) All internal separation of circuits shall have an enclosure rating of IP4X or better to SABS 1222.

17.1.3 Small power Distribution Boards shall have an internal degree of separation of form 2B as detailed in SANS 60439-1.

17.1.4 All Assemblies inclusive of motor control centres but excluding Valve Distribution panels, shall in addition to the specified cubicles, make provision for at least 10 % spare unequipped cubicles complete with busbars, partitioning into compartments etc for future extensions.

17.1.5 Valve Distribution Assemblies shall be sized to cater for the following requirements:

- Provision for an additional 25 % spare valve MCB's, of which 10% shall be installed and labelled as spare.

17.1.6 The maximum height of all MCC boards shall be 2 200 mm unless otherwise approved by the Engineer. No equipment other than busbars and/or inter panel control wiring shall be installed higher than 1 800 mm above finished floor height, neither shall any equipment, other than cable glands and inter panel control wiring be installed lower than 300mm above finished floor level.
Where a base frame is utilised for cabling purposes, cables may be glanded at the panel base.

## 18. LABELLING

18.1 **Internal Labels:**

18.1.1 All components shall be labelled according to the schematic diagram, with their complete "-" Component Identification designation, in accordance with the Transnet Pipelines Label Designation Standard attached to this Specification (Ref: 631-001_LVLabelSpec, 711-001_PLCLabelSpec).

18.1.2 Where possible, labels are to be attached on the panel next to the device, but where this is not practical, then, and only then, may the label be placed directly onto the device.

18.1.3 Labels shall comprise of the Traffolyte engraved type, and fixed to the board by means of stainless steel screws or epoxy glue.

18.1.4 Finish shall comprise of black letters against a white background, except in the case of cautionary labels where letters shall appear white on a red background.

18.1.5 Labels shall be affixed in such a way that they are easily legible and not obstructed by the wiring or by other components.

18.1.6 All lettering shall be in upper-case letters except where standard abbreviations of units are used, e.g. kWh, kVA, etc.

18.2 **Internal Labels: Terminal Rails**

18.2.1 All Terminal Rails shall be labelled with their complete "-" Component Identification designation, in accordance with the Transnet Pipelines Label Designation Standard attached to this Specification. (Ref: 631-001_LVLabelSpec, 711-001_PLCLabelSpec).

18.2.2 Note that two types of Terminal Rail Labels have been defined as follows:

a. Field Marshalling – label identifies the Cable ID terminated into the terminals
b. PLC I/O Marshalling – label identifies the PLC ID:Rack No:Slot No of the associated I/O Card

18.2.3 Labels are to be attached to Terminal Rail Label Holders located at the top of the terminal rail.

18.3 **Internal Labels: Equipment**

18.3.1 Each device shall be labelled with its complete Functional Identification designation, in accordance with the Transnet Pipelines Label Designation Standard attached to this Specification. (Ref: 631-001_LVLabelSpec, 711-001_PLCLabelSpec). The labels shall be readable/visible after the wiring has been done. Where possible, labels are to be attached on the panel above the device.

18.3.2 MCB's shall be clearly labelled as to their functionality (what equipment is supplied) and supply voltage by means of a laminated legend plate located on the inside door panel of the cubicle housing the respective MCB's. In addition, all MCB's shall be individually labelled with the respective MCB No's on the front top of the breaker so as to enable rapid visual identification.

18.3.3 MCB's feeding valve actuators shall be individually labelled with the respective Valve Ops Code Identifiers on the front top of the breakers so as to enable rapid visual identification.

Refer to Section 18 for details on Label Specifications.

18.4 **External Labels**

18.4.1 Labels shall be provided in compliance with the OSH Act and SANS 10142-1, and as required to facilitate the operation of the equipment with no prior working knowledge of the Equipment.

18.4.2 Labels shall comprise of the Traffolyte engraved type, and fixed to the board by means of stainless steels screws. Finish shall comprise of black letters against a white background, except in the case of cautionary labels where letters shall appear white on a red background.

18.4.3 All lettering shall be in upper-case letters except where standard abbreviations of units are used, e.g. kWh, kVA, etc.

18.5 **External Labels: Equipment Designation**

18.5.1 Each Panel/Cubicle door shall be labelled with its complete "=/+" Identification designation, in accordance with the Transnet Pipelines Label Designation Standard attached to this Specification. (Ref: 631-001_LVLabelSpec, 711-001_PLCLabelSpec). Labels are to be attached on the panel door top right corner where possible.

18.5.2 RATING PLATE

Each ASSEMBLY shall have a RATING plate in accordance with SANS 1973-1 stating at least the following:

- Name of the ASSEMBLY
- Plant coding
- Manufacturer
- Manufacturer's address and contact telephone number
- Standard to which it was manufactured and type-tested
- Main Busbar current rating
- Rated operating voltage
- Control voltage
- Rated impulse withstand voltage
- IP rating
- Short-circuit rating in kA and duration in seconds
- Form of separation of respective sections

18.5.3 INCOMER CUBICLES

- Incomer Equipment Designation (by Function "=" and Location "+")
- Manufacturers name or Trademark
- Rated Voltage and Current
- Short Circuit Rating and Duration $I_{SC}$
- Rated Insulation Voltage
- IP rating
- Type of Earthing System
- Indication of where the board is fed from

18.5.4 EQUIPMENT CUBICLES

- Equipment Designation (by Function "=" and Location "+")
- Equipment Description
- Equipment Rating

18.5.5 SMALL POWER & DISTRIBUTION CUBICLES (Fault Level < 10kA)

- DB Board Designation (by Function "=" and Location "+")
- Rated Voltage and Current
- Short Circuit Rating and Duration $I_{SC}$
- Indication of where the board is fed from

18.6 **EXTERNAL LABELS: WARNING**

18.6.1 The following warning & equipment labels shall be supplied as a minimum on applicable cubicle doors:

18.6.2 INCOMER CUBICLES

- Incomer Equipment Designation (e.g. F31), as well as indication of function "MAIN SWITCH". Black text on white background.
- Danger Notice giving instructions that the switch disconnector be switched off in the event of inadvertent contact or leakage.
- Where series-connected (cascaded) systems have been installed, the warning notice as detailed in SANS 10142-1:2012 Section 6.7.4 (d) shall be installed. White Text on red background.

18.6.3 EQUIPMENT CUBICLES

- Where cubicles are fed from two or more different sources, a warning label shall be installed identifying the sources
  E.g. Feed from Generator ("Emergency Supply"), UPS ("UPS Supply") or both ("Emergency & UPS Supply") White text on red background

18.6.4 All identification shall comply with As Built drawings and single line diagrams, in accordance with the Transnet Pipelines Label Designation Standard attached to this Specification. (Ref: 631-001_LVLabelSpec, 711-001_PLCLabelSpec).

18.7 **External Labels: Small Power & Distribution**

18.7.1 All Plug Sockets, Light Switches etc. shall be labelled with their complete Functional Designation, in accordance with the Transnet Pipelines Label Designation Standard attached to this Specification. (Ref: 631-001_LVLabelSpec). Labels are to be attached on the equipment front cover top right corner where possible.
In this regard, designators shall identify the MCB from which the equipment is fed e.g. = 38 DB01.Q10.

## 19. FACTORY ACCEPTANCE TEST PROCEDURES

19.1 Unless otherwise specified, work and acceptance tests shall be conducted on all equipment at the place of manufacture. Contractors shall be responsible for the compilation of an Acceptance Test Schedule to be used for acceptance testing of the system. The test schedule shall be comprehensive and must cover all aspects of the system to be tested and will be subject to the approval of Transnet Pipelines, prior to commencement of Pre-acceptance Testing.

19.2 The successful Tenderer will be responsible for providing all test equipment and facilities required for the period of the acceptance tests such as the Engineer may deem necessary, and to produce a report of the tests concerned.

19.3 Transnet Pipelines reserves the right to add or delete any item or test from the test result of hardware failure, re-scheduling of the test will be at the discretion of the Engineer. Transnet Pipelines reserves the right to repeat or incorporate any additional test into the test schedule.

19.4 Inspection by the TPL representative shall be performed at the following pre-defined stages of manufacture:

a. Prior to commencement of wiring
b. Prior to Functional Testing

19.5 The following tests shall be required to be performed as part of a Factory Acceptance Test Procedure:

a. A physical check of all equipment shall be made against drawings and shall include a check for tightness of connections, correct core idents etc.
b. A terminal to terminal routing check of all panel wiring shall be made against drawings and the drawings red-lined accordingly
c. Trip element ratings of all supply and distribution breakers shall be made
d. Earth leakage tripping shall be made on all circuits
e. Effectiveness of earthing system shall be checked
f. Powering up of panel shall be conducted and equipment run for a period of three hours. During this time a check for abnormal operating conditions shall be made eg. temperature and current.
g. Simulation of all discrete and analog signals from the respective field terminals into the respective PLC I/O modules

19.6 The supplier shall provide proof that specific components installed in the ASSEMBLY complies with relevant specification as tested by an authorized testing authority.

19.7 The following Continuity/Insulation Tests in accordance with SANS 60439-1 shall be performed by manufacturer. NB: All electronic components will require to be isolated before commencement of these insulation tests.

a. Insulation tests
b. Torque tests of all bolted Busbar connectors
c. Point to point wiring checks. (wire buzzer checks)

## 20. APPENDIX 1

| PREFERRED EQUIPMENT LIST | | | |
|---|---|---|---|
| | | | |
| **ITEM** | **DESCRIPTION** | **MANUFACTURER** | **TYPE NUMBER** |
| | | | |
| 1 | Incoming Circuit Breakers >400A Draw Out | Schneider Electric | Masterpact |
| 2 | Incoming Circuit Breakers <400A Fixed Pattern | Siemens; Schneider | 3VF; Masterpact |
| 3 | Distribution Circuit Breakers | Siemens; Schneider | 3VF/3RV |
| 4 | Miniature Circuit Breakers | Siemens; Schneider | 5SX2 |
| 5 | Motor Protection Circuit Breakers | Siemens; ABB | 3VU/3RV |
| 6 | Contactors | Siemens | 3TF/3RT |
| 7 | Overloads | Siemens | 3UA5/3RU1 |
| 8 | Push Buttons | Siemens | 3SB1 |
| 9 | PLC Interface Relays | Siemens | 3TX7 |
| 10 | Change Over Switches | Krauss & Naimer | |
| 11 | Terminals | Klippon | SAK/RSF1 |
| 12 | Fuses and Bases | Siemens | 3NW3 |
| 13 | Over Voltage Protection | Strike Technologies; Dehn | ZORC |
| 14 | | | |
| 15 | | | |
| 16 | | | |
| 17 | | | |
| 18 | | | |
| 19 | | | |
| 20 | | | |

# Electrical Design Criteria
**PL666**

**Rev.001**

# AMENDMENT RECORD

| REV | REV DATE | CHG REQ NO. | CHANGE SUMMARY | PAGES AFFECTED |
|---|---|---|---|---|
| 001 | 16.05.2016 | | Small power wiring requirements in buildings. | 34 |
| | | | | |
| | | | | |
| | | | | |
| | | | | |
| | | | | |
| | | | | |
| | | | | |
| | | | | |
| | | | | |
| | | | | |

# Contents


| | | | Page |
|---|---|---|---|
| **1** | **General** | | 1 |
| | 1.1 | Summary | 1 |
| | 1.2 | Reference Documents | 1 |
| | 1.3 | Deliverables | 9 |
| | 1.4 | Site Conditions | 10 |
| | 1.5 | Area Classification | 10 |
| 2 | **Power Supply** | | 10 |
| | 2.1 | Main Supply | 10 |
| | 2.2 | Standby Supply | 10 |
| 3 | **Design Criteria** | | 11 |
| | 3.1 | Load Evaluation | 12 |
| | 3.2 | Voltage Levels | 13 |
| | 3.3 | Short Circuit Levels | 13 |
| | 3.4 | Voltage Regulation | 14 |
| | 3.5 | Power Factor Correction and Harmonic Filtration | 16 |
| | 3.6 | Sparing Philosophy | 16 |
| | 3.7 | Operating Philosophy | 16 |
| | 3.8 | System Analysis and Calculations | 17 |
| 4 | **Equipment Design Requirements** | | 17 |
| | 4.1 | Switchgear | 17 |
| | 4.2 | Protective Devices | 18 |
| | 4.3 | Metering and Control | 19 |
| | 4.4 | Power Transformers | 21 |
| | 4.5 | Battery Charger Systems | 21 |
| | 4.6 | UPS System | 22 |
| | 4.7 | Electric Motors | 22 |
| | 4.8 | Standby Generator | 24 |
| 5 | **Facilities Design Requirements** | | 24 |
| | 5.1 | Control and Administration Buildings | 24 |
| | 5.2 | Substation Buildings | 24 |
| | 5.3 | Earthing Installations | 26 |
| | 5.4 | Lighting | 28 |
| | 5.5 | Cable and Wiring System | 33 |
| | 5.6 | Electric Surface Heating Systems | 36 |
| | 5.7 | Socket Outlets | 37 |

# 1 General

## 1.1 Summary

### 1.1.1 Scope of Specification

This specification prescribes the basic minimum requirements and principles for the electrical design, selection, and protection of electrical equipment, materials and installation of electrical facilities on the Transnet Pipelines projects.

All designs shall ensure continuous and reliable service, the safety of personnel and equipment during operation, ease of maintenance, energy efficiency, interchange ability of equipment, reasonable spare capacity for the addition of future loads, safe starting, safe operation, minimum power losses, and safe shutdown of units under all circumstances.

### 1.1.2 Scope of Facilities

The electrical facilities shall include power, lighting, earthing and supplies to electricity consuming apparatus throughout the installations.

This document will not completely specify the details of the equipment and the services that will form part of an Engineering Contractors scope of supply. As part of the engineering services, Contractors shall make Employer aware of available equipment type options that will be beneficial when considering cost performance, maintainability, quality and energy efficiency. Such options shall be considered for installation by evaluating the suitability and benefits offered.

## 1.2 Reference Documents

Where reference is made to a specification, standard or code, the reference shall be taken to mean the latest edition of such specification, standard or code, including addenda, supplements and revisions thereto, current at the date of award of contract.

The following lists of specifications standards, as well as all associated references, shall be applied on any project as the basis of design, manufacture and construction, as appropriate.

### 1.2.1 Transnet Pipelines Specifications

Wherever Transnet Pipelines specifications cannot be made available, the engineering contractor shall supplement with an applicable specification. *Employer* approval of Equipment and Materials specifications is required prior to the same being applied to the Works.

| | |
|---|---|
| PL 100 | Drawings Standards Document |
| PL 101 | Plant and Equipment Tag Numbering Standard |
| PL 102 | Equipment, Instrument and Electrical Symbology Standards |
| PL 103 | General Drawing Standards |
| PL 145A | Transnet Pipelines's Requirements for the Supply of Power Factor Correction Modules |
| PL 619C | Specification for Three Phase Electric Actuators |
| PL 622H | Standby Plant Specification |
| PL 627G | Routine Protection Testing and Refurbishment of Selected Protection Equipment at Transnet Pipelines's Distribution Substations / MV Switchgear Facilities |

| | |
|---|---|
| PL 630A | Transnet Pipelines's Requirements for the Re-design and Alterations to Existing HV Substation Layouts and protection Configurations |
| PL 631 | Specification for Low Voltage Switchgear and Distribution Boards |
| PL 632 | Specification for Medium Voltage Switchgear |
| PL 647 | Requirements for the Supply of 110VDC Battery Charger |
| PL 648 | Requirements for the Supply of 50VDC Battery Charger |
| PL 720 | Specification for a small Uninterruptible Power Supply |
| PL 727 | Cabling, Racking, Trenching and Earthing Installation codes of Practice |
| Explolabs report no XPS/1015/13013Rev2- TPL Hazardous Areas Classification guidelines | |

### 1.2.2 South African Regulations

The Occupational Health and Safety Act (Act No 85 of 1993)

### 1.2.3 South African National Standards (SANS) Codes of Practices

| | |
|---|---|
| SANS 10083 | The measurement and assessment of occupational noise for hearing conservation purposes |
| SANS 10086 | Installation and maintenance of electrical equipment used in explosive atmospheres |
| SANS 10089 | The Petroleum Industry<br>Part 1: The Handling, Storage and Distribution of Petroleum Products<br>Part 2: Electrical Code |
| SANS 10108 | The Classification of Hazardous Locations and the Selection of Apparatus for Use in Such Locations |
| SANS 10114 | Interior Lighting<br>Part 1: Artificial Lighting |
| SANS 10119 | Reduction of explosive hazards presented by electrical equipment - Segregation, ventilation and pressurisation |
| SANS 10121 | Cathodic protection of buried and submerged structures |
| SANS 10123 | The Control of Undesirable Static Electricity |
| SANS 10131 | Above-Ground Storage Tanks for Petroleum Products |
| SANS 10142 | The wiring of premises |
| SANS 10191 | Acoustics - determination of sound power levels of noise sources |
| SANS 10198 | The selection, handling and installation of electric power cables of rating not exceeding 33 kV |
| SANS 10199 | The Design and Installation of an Earth Electrode |
| SANS 10200 | Neutral earthing in medium voltage industrial power systems |
| SANS 10292 | Earthing of Low Voltage (LV) Distribution Systems |
| SANS 10313 | The protection of structures against lightning |

### 1.2.4 South African National Standards (SANS)

| | |
|---|---|
| SANS 97 | Electric cables - Impregnated-paper-insulated metal sheathed cables for rated voltages 3.3/3.3 kV up to 19/33 kV |
| SANS 1339 | Electric Cables –Cross-linked Polyethelene (XLPE) insulated cables for rated voltages 3.8/6.6 to 19/33kV |
| SANS 156 | Moulded Case Circuit Breakers |
| SANS 342 | Automotive diesel fuel |

| | |
|---|---|
| SANS 767 | Earth leakage protection units |
| SANS 780 | Distribution transformers |
| SANS 808 | Cable glands for use on flameproof enclosures (Ex 'd') |
| SANS 950 | Unplasticised polyvinyl chloride rigid conduit and fittings for use in electrical installations |
| SANS 1019 | Standard voltages, currents and insulation levels for electricity |
| SANS 1029 | Miniature Substations |
| SANS 1063 | Earth Rods and Couplers |
| SANS 1091 | National colours standards for paints |
| SANS 1213 | Mechanical cable glands |
| SANS 1339 | Electric cables - Cross linked polyethylene (XPLE) insulated cables for voltages from 3.8/6.6 kV to 19/33 kV |
| SANS 1411 | Materials of Insulated Electric Cables and Flexible Cords |
| SANS 1473 | Low voltage switchgear and control gear assemblies |
| SANS 1474 | Uninterruptible Power Systems |
| SANS 1507 | Electric cables with extruded solid dielectric insulation for fixed installations |
| SANS 1574 | Electric cables – Flexible Cords and Flexible Cables |
| SANS 1632 | Batteries |
| SANS 1652 | Battery Chargers – Industrial Type |
| SANS 1804 | Induction motors |
| SANS 1874 | Metal Enclosed Ring Main Units for Rated Voltages above 1kV Up To and Including 24kV |

### 1.2.5 South African National Rationalized User Specifications (NRS)

| | |
|---|---|
| NRS 042 | Guide for the Protection of Electronic Equipment against Damaging Transients |
| NRS 048 | Electrical Supply – Quality of Supply Standards |
| Part 4: | Voltage characteristics, compatibility levels, limits and assessment methods |
| Part 8: | Application guidelines for utilities |

### 1.2.6 SANS / International Electrotechnical Commission (IEC) Standards

| | |
|---|---|
| SANS IEC 60034 | Rotating electrical machines |
| SANS IEC 60034-25 | Rotating electrical machines Part 25: Guide for the design and Performance of Cage Induction Motors Specifically Designed for Converter Supply. |
| SANS IEC 60044-1 | Current Transformers |
| SANS IEC 60044-2 | Voltage Transformers |
| SANS IEC 60050 | International Electrotechnical vocabulary - Switchgear, control gear and fuses |
| SANS IEC 60056 | High voltage alternating current circuit breakers |
| SANS IEC 60060 | High Voltage Test Techniques |
| SANS IEC 60072 | Dimensions and output series for rotating electrical machines |
| SANS IEC 60076 | Power transformers |
| SANS IEC 60079 | Electrical apparatus for explosive gas atmospheres |
| SANS IEC 60099 | Surge arresters |
| SANS IEC 60129 | Alternating current disconnectors (Isolators) and earthing switches |
| SANS IEC 60137 | Insulated Bushings for Alternating Currents above 1000V |
| SANS IEC 60227 | PVC Cables |

| | |
|---|---|
| SANS IEC 60265-1 | High voltage switches for Rated Voltages above 1kV and up to and less than 52kV |
| SANS IEC 60269 | Low voltage fuses |
| SANS IEC 60282 | High voltage fuses |
| SANS IEC 60298 | AC metal enclosed switchgear and controlgear for rated voltages between 1 kV and 52 kV |
| SANS IEC 60331 | Tests for Electrical Cables under Fire Conditions |
| SANS IEC 60423 | Conduits and fittings for electrical purposes |
| SANS IEC 60470 | High Voltage Alternating Current Contactors and Contactor Based Motor Starters |
| SANS IEC 60478 | Stabilised power supplies, dc output |
| SANS IEC 60529 | Degrees of Protection Provided by Enclosures (IP Code) |
| SANS IEC 60686 | Stabilised power supplies, ac output |
| SANS IEC 60614 | Specification for Conduits for Electrical Installations |
| SANS IEC 60694 | Common clauses for high voltage switchgear and controlgear standards |
| SANS IEC 60793 | Optical Fibres |
| SANS IEC 60794 | Optical Fibre Cables |
| SANS IEC 60871 | Shunt Capacitors for ac Power Systems having a rated voltage above 660V |
| SANS IEC 60896-1 | Stationary Lead-acid Batteries General Requirements and Methods of Test |
| SANS IEC 60934 | Circuit breakers for Equipment |
| SANS IEC 60947-3 | Low voltage switchgear and control gear Part 3: Switches, Disconnectors, Switch Disconnectors and Fuse Combination Units, |
| SANS IEC 61000 | Electromagnetic compatibility |
| SANS IEC 61024 | Protection of Structures against Lightning |
| SANS IEC 61084-1 | Cable trunking and ducting systems for electrical installations Part 1: General Requirements |
| SANS IEC 61241 | Electrical apparatus for use in the presence of combustible dusts. |
| SANS IEC 61312 | Protection Against Lightning Electromagnetic Impulse |
| SANS IEC 61558 | Safety of Power Transformers, Power Supply Units and Similar |
| SANS IEC 62271-100 | High-Voltage Switchgear and Control Gear Part 100 : High-Voltage Alternating Current Circuit Breakers |
| SANS IEC 62271-102 | High-Voltage Switchgear and Control Gear Part 102 : High-Voltage Disconnectors and Earth Switches |

### 1.2.7 IEC Standards

| | |
|---|---|
| IEC 60038 | IEC Standard Voltages |
| IEC 60059 | IEC Standard Current Ratings |
| IEC 60060 | High Voltage Test Techniques |
| IEC 60071 | Insulation Coordination (Application Guide) |
| IEC 60073 | Basic and Safety Principles for Man-machine Interface, Marking and Identification – Coding Principles for Indicators and Actuators |
| IEC 60146-2 | Semiconductor Convertors – Part 2 : Self-commutated Semiconductor Convertors Including Direct dc Convertors |
| IEC 60214-2 | Tap Changers – Part 2 : Application Guide |
| IEC 60255 | Electrical Relays |

| | |
|---|---|
| IEC 60289 | Reactors |
| IEC 60296 | Unused Mineral Insulating oils for Transformers and Switchgear |
| IEC 60358 | Coupling capacitors and capacitor dividers |
| IEC 60376 | Specification of Technical grade Sulphur Hexafloride ($SF_6$) for use in Electrical Equipment |
| IEC 60439 | Low voltage Switchboards and Control Assemblies |
| IEC 60445 | Basic and Safety Principals for Man-machine Interface, marking and identification. Identification of Equipment Terminals and of Terminations of Certain Designated Conductors, Including General Rules for an Alphanumeric System. |
| IEC 60466 | Insulation-enclosed Switchgear and Control Gear for Rated Voltages Above 1kV and up to and Including 38kV |
| IEC 60593 | Internal Fuse and Internal Overpressure Disconnectors for Shunt Capacitors |
| IEC 60664 | Insulation Coordination for Equipment within LV Systems |
| IEC 60686 | Stabilised power supplies, ac output |
| IEC 60614 | Specification for Conduits for Electrical Installations |
| IEC 60632 | High Voltage Motor Starters – Direct-On-Line Full Voltage Starters |
| IEC 60722 | Guide to the Lightning Impulse and Switching Impulse Testing of Power Transformers and Reactors |
| IEC 60831-2 | Shunt power capacitors of the self-healing type for AC power systems having a rated voltage up to and including 660 V |
| IEC 60931 | Shunt power capacitors of the non healing type for ac systems up to 1000 V |
| IEC 61073-1 | Mechanical and Fusion Splices Protectors for Optical Fibres and Cables |
| IEC 61140 | Protection Against electric Shocks – Common Aspects for Installation and Equipment |
| IEC 61800 | Adjustable Speed Electrical Power Drive Systems |
| IEC 62040 | Uninteruptible Power Supplies (UPS) |
| IEC TR 61641 | Enclosed LV Switchgear and Control Gear Assemblies – Guide for Testing Under Conditions of Arcing Due to an Internal Fault |
| IEC TR 62063 | The Use of Electronic and Associated Technologies in Auxiliary Equipment of Switchgear and Control Gear |

### 1.2.8 British Standards

| | |
|---|---|
| BS 115 | Metalic Resistance Materials for Electrical Purposes |
| BS 159 | High Voltage Busbars and Busbar Connections |
| BS 381C | Specification for Colours for Identification, Coding and Special Purposes |
| BS 4999 | General requirements for rotating electrical machinery |
| BS 5514 | Reciprocating internal-combustion engines |
| BS 6133 | Safe Operation of Lead-Acid Stationary Cells and Batteries |
| BS 6351 | Electric Surface Heating |
| | Part 1 Specification for Electric Surface Heating |
| | Part 2 Guide to the Design of Electric Surface Heating Systems |

| | |
|---|---|
| | Part 3 Code of practice for the Installation, Testing and maintenance of Electric Surface Heating Systems |
| BS 6387 | Performance Requirements for Cables required to Maintain Circuit Integrity Under Fire Conditions |
| BS 7361 | Cathodic Protection |
| | Part 1: Code of Practice for Land and Marine Applications |

**1.2.9 Institute Of Petroleum Model Code Of Safe Practices**

| | |
|---|---|
| IP Code Part 1 | Electrical safety code |
| IP Code Part 15 | Area classification code for petroleum installations |

**1.2.10 International Organisation For Standardisation (ISO) Standards**

| | |
|---|---|
| ISO 3722 | Determination of Sound Power levels of Noise Sources |
| ISO 1461767 | Hot dipped galvanized coatings on fabricated iron & steel articles |
| EN ISO 9001 | Quality Management Systems Requirements |

**1.2.11 National Association of Corrosion Engineers (NACE) Recommended Practices**

| | |
|---|---|
| NACE RP0169 | Control of External Corrosion on Underground or Submerged, Metallic Piping Systems |
| NACE RP0193 | External Cathodic Protection of On-grade Carbon Steel Storage Tank Bottoms |
| NACE RP0286 | Electrical Isolation of Cathodically Protected Pipelines |
| NACE RP0572 | Design Installation, Operation and Maintenance of Impressed Current Deep Groundbeds |

**1.2.12** RAL Deutsches Institut Fur Gutesicherung Und Kennzeichung – RAL – Farben RAL Specification for Colours for Identification, Coding and Special Purposes

**1.2.13** Electrical equipment and the installation thereof shall as a minimum satisfy the requirements of relevant internationally recognised specifications and codes of practice.

**1.2.14** Where applicable, equipment items shall carry an internationally recognised mark to demonstrate compliance with the directives of codes of practice. Copies of the manufacturer's Declaration of Conformity' certificates and test reports shall be provided by equipment Suppliers.

**1.2.15** Suppliers may at their discretion, elect to provide marking for the complete equipment assembly. In which case, the Suppliers shall describe the procedure to be followed and / or details of the documentary evidence that will be provided for each component item of the complete assembly, for which is necessary to demonstrate compliance with the relevant directives / regulations.

### 1.2.16 Hierarchy

The hierarchy determines which standard is to be followed if there is a dispute or difference .Transnet Pipelines standards and specifications shall take precedence over general industrial recommended practices and guides.

If a conflict exists between the codes or standards, the most stringent interpretation shall apply. Where reference is made to a specification, standard or code, the reference shall be taken to mean the latest edition of such specification, standard or code, including addenda, supplements and revisions thereto, current at the date of award of contract. In general, the order of precedence shall be:

- Transnet Pipelines Standards
- Statutory Requirements and issued directives
- The purchase order for an item of equipment of work package
- South African National Standards
- International Codes and Standards
- Industry Publications.

In the case of conflicting requirements, the most stringent or conservative approach shall be followed. Where there is any doubt as to the above order of precedence, the matter shall be referred to the Responsible Engineer for resolution.

### 1.2.17 Energy Efficiency

The electrical system will be designed to comply with Transnet Pipelines' energy efficiency strategy.

The following will be focused on but not be limited to include the energy efficiency design:

- Sizing of cables and busbars to limit copper losses and improve power usage
- Power factor correction to improve Measured Maximum Demand
- Optimal lighting design and use of LED / low power light fittings
- Use of high efficiency equipment throughout the project.
- Use of occupancy sensors or day/night switches
- Use of VSD's for motor applications
- Timers and blankets on geysers
- Limiting circuit breaker capacity in predefined areas
- Design for optimal minimum volt drop to the main distribution board.

## 1.3 Deliverables

Engineering technical services and the design deliverables that are to be provided by an Engineering Contractor shall be in general accordance with Transnet Pipelines's specified requirements.

Prior to manufacturing/procurement of panels all designs must be accepted by Transnet Pipelines. This includes internal and external general arrangements(GA's) and component layout inspections as a minimum.

It's the Project Manager function to ensure all process are included in the schedule eg. FAT, release of equipment, SAT, commissioning phases,etc.

Docs to be submitted for acceptance prior procurement process or manufacturing:

- Installation specification
- SLD's, Internal and External General Arrangement drawings
- Floor plan layouts
- Cable racking layouts
- Component lists
- Equipment Data Sheets
- Cable schedules including volt drop and de-rating factors
- FAT and SAT procedures

At the close out of projects the CoC is must be completed. The CoC will be a comprehensive document with an index and supporting documentation to be included. The index shall be has per typical of Transnet Pipelines CoC's and must be submitted at the early stages for acceptance.

## 1.4 Site Conditions

Site specific environmental conditions shall be provided to Contractors with the relevant datasheets issued with enquiries for equipment.

Pests normally encountered are rats, birds and snakes. All installations should be designed to prevent them from accessing equipment and cabling.

Some sites have specific pests such as termites, venomous snakes, spiders, scorpions, snakes, bats, and burrowing animals. These should be identified and the specific preventative and curative measures should be made available

### 1.5 Area Classification

**1.5.1** Installations shall be classified in accordance with SANS 10108 Annexure G and IP Model Code of Safe Practice in the Petroleum Industry - Part 15: Area Classification Code for Petroleum Installations.

**1.5.2** The selection of the correct type of classified electrical equipment and the installations within each area that has been classified as hazardous shall be in accordance with the IP Model Code of Safe Practice in the Petroleum Industry - Part 15: Area Classification Code for Petroleum Installations.

**1.5.3** All electrical equipment and each component utilised in the installation of such equipment shall be selected to be entirely suitable for the area classification in which it is to be located and shall as an absolute minimum be certified for the classification as reflected in the associated area classification schedules and / or on the plant Hazardous Area layout drawings. Certificates shall be issued by an authorised **local** laboratory.

**1.5.4** The installation of certified equipment shall fully comply with any conditions and restrictions of installation and use imposed by the respective equipment certificate.

## 2 Power Supply

### 2.1 Main Supply

In general local Power Supply Authorities provide the required power supplies to the Transnet Pipelines installations. When necessary, Transnet Pipelines will supply contact details for the specific supply authority.

### 2.2 Standby Supply

**2.2.1** The standby power supply at the installations shall be provided from a diesel engine driven generator set. The set will be arranged for automatic start-up and connection to the respective 400V switchboard / MCC following a mains supply failure.

**2.2.2** The standby generator set shall generate power at 400V, 3 phase, 50 Hz and shall be rated to supply emergency power only to the installation, taking into account the starting duty of the largest connected motor load. In addition, the selected rating of diesel generators shall ensure that the continuous running load on the generator will not be less than 50% of the engine rated output power in order to avoid problems associated with engine choking and resultant loss of reliability. The acceptable minimum rating of a diesel generator set shall be 60kVA per Transnet Pipelines specification PL622H.

**2.2.3** The generator set shall be provided with the necessary change-over control and electrical protection facilities to permit slow transfer of the load for regular routine on-load test and maintenance.

## 3 Design Criteria

### 3.1 Load Evaluation

**3.1.1** An electrical Power User Schedule and load profiles shall be prepared for each installation. The Power User Schedule shall be generated from the

'Approved for Design (AFD)' Mechanical equipment list and shall thereafter be maintained throughout the design phase of the project to include all power consumers on the plant.

**3.1.2** The load list may provide a breakdown of plant loads sorted by:

- Substation
- main distribution switchboards
- main or standby or emergency service
- motor drives and static loads
- voltage levels

**3.1.3** The Power User Schedule shall tabulate the required loading for each installation on the basis of the highest loaded operating scenario. Consumer duties shall be defined as continuous, intermittent or standby as follows:

- Continuous:Loads that is normally running / energised during operating times.
- Intermittent:Loads in service on an intermittent basis e.g. motorised valves, or spares of continuously running consumers.
- Standby:Loads connected but not normally energised e.g. operational spares.
- Total loads shall be calculated for each duty category and each distribution switchboard. A summary sheet shall total loads for each installation.

**3.1.4** When determining the rating of new power supply requirements and the continuous current rating of major electrical equipment (e.g. transformers), design margins shall be applied to the calculated maximum running load values so as to facilitate a minimum of 25% spare capacity.

**3.1.5** When adding load to existing systems, the dual redundant rating of the existing power supply transformers shall not be exceeded.

### 3.1.6 Power System Studies

System studies shall be provided in support of the design. Depending on the type, size and complexity of the installation, such studies may comprise the following:

- Rating of major equipment
- Load assessment and load flow studies
- Fault level studies
- Harmonic and PFC studies on completion of installation

The scope of the system studies, drawings and documentation for each stage of the development shall be defined and agreed before their commencement.

**The Electrical Design Criteria** ensures uniformity and consistency of the design by describing:

- Technical documentation referred to during Electrical Design

- Electrical tools , software and procedures used in preparing the design
- Specific requirements for system design
- Requirements for protection and control systems
- Equipment sizing and selection methods
- Equipment specifications
- Definition of detail for all Electrical deliverables

While this document provides general guidance it shall not be a substitute for good engineering judgement which should be applied as appropriate with the approval of the respective Design Engineer.

**The electrical equipment** shall be designed and engineered to:

- Provide a safe working environment for personnel
- Minimise the environmental impact
- Operate with low maintenance for at least the 25 years lifetime of the facility
- Provide a reliable electrical system, by supplying critical equipment from alternative sources
- Integrate with the existing electrical infrastructure
- Provide standardisation to rationalise spares kept in stores.

## 3.2 Voltage Levels

### 3.2.1 Distribution

The following distribution voltage levels shall be used:

- Utility Supply (Various) 3 Phase; 3 Wire; 50 Hz
- 3,300V 3 Phase 3 Wire 50 Hz Resistance earth system or
- 6,600V 3 Phase 3 Wire 50 Hz Resistance earth system or
- 11,000V 3 Phase 3 Wire 50 Hz Resistance earth system.
- 400 V 3 Phase 4 Wire 50 Hz Solid earth system
- 230 V Phase and Neutral 50 Hz Unearthed UPS – control supplies

### 3.2.2 Utilisation

Equipment shall generally be suitable for operation at the following utilisation voltages:

- Medium Voltage Motors 3,300V or 6,600V or 11,000V, 3 Phase, 50 Hz, Resistance earthed system
- Motors 0.18 kW - 149 kW, 400 V, 3 Phase, 50 Hz, Solidly earthed system
- Motors below 0.18 kW, 230 V, 50 Hz, Phase & Neutral
- Lighting supply,400 V / 230 V, 3 Phase, 4 Wire, 50 Hz
- Lighting, 230 V, 50 Hz, Phase & Neutral
- Instruments, 220V, 50 Hz, Phase & Neutral UPS
- Welding outlets, 400 V , 3 Phase + earth, 4 Wire, 50 Hz
- Convenience outlets, 230 V, 50 Hz, Phase & Neutral

- Switchgear closing and tripping, 110 V DC unearthed
- Control circuits, 220 V AC

## 3.3 Short Circuit Levels

**3.3.1** Major electrical equipment and power distribution system design duties shall, as a minimum requirement, exceed the calculated peak and the steady state short circuit fault levels as calculated from the reactance parameters of the power supply network transformers and / or generator(s), and where appropriate the contribution from induction motors.

**3.3.2** 400V MCC secondary distribution design to allow for MCB ratings determined by cascading tables as per SANS 10142.

**3.3.3** On sites with both transformer and standby generator incoming supplies, maximum prospective fault level calculations shall include contributions from the transformer or the generator. The generator will not run in parallel with the transformer on the “Normal” busbar.

Worst case calculation for switchgear rating:

- Maximum Source Voltage
- Minimum Source Impedance
- Minimum Transformer Impedance (tolerance)
- All motors running
- Margin (minimum 5%)

Short Circuit Calculations shall be carried out using the guidelines of IEC 60909 - The calculation of short-circuit currents in three-phase AC systems. Minimum fault level calculations will be required for protection co-ordination.

## 3.4 Voltage Regulation

### 3.4.1 Steady State

The power distribution system and connected electrical equipment shall be designed for a steady state voltage regulation of + 5% / - 5% and a frequency variation of +/- 2%.

### 3.4.2 Motor Starting

The maximum voltage depression, on the nominal voltage, measured during motor starting at any distribution system busbar down-stream of the 'point of common coupling', shall be limited to 15%.

In addition, the minimum acceptable voltage at a running motor's terminals during the transient period of another motor starting shall be limited to 80% of the nominal voltage. Where system study calculations indicate that the transient voltage depression at the starting motor's terminals will exceed 20% of nominal, then the minimum voltage limits shall be co-ordinated with the motor manufacturer / driven equipment manufacturer/switchgear manufacturer.

### 3.4.3 Normal Operation

The allowable steady state voltage drop in cables, based on circuit full load current values, shall not exceed the following. To prevent over sizing of cables, volt-drop and de-rating calculations will be based on SANS 10142:

| | |
|---|---|
| Primary distribution feeder cables (3.3 kV ) | 2% |
| Secondary distribution feeder cables (400 V) | 2% |
| Motor feeder cables (400 V) between the Motor controller and the motor terminals | 2% |
| Distribution board feeder cables | 2.5% |
| Lighting and small power circuits between the distribution board and the most remote luminaire or outlet | 4% |

## 3.5 Power Factor Correction and Harmonic Filtration

**3.5.1** Because of various operating scenarios, the power factor at Transnet Pipelines installations is normally controlled by adding power factor correction to the individual MV induction Direct On line motor starter circuits.

**3.5.2** Power factor correction equipment shall be sized to maintain the operational power factor of its respective motor to not more than 0.96

**3.5.3** PFC equipment is not required wherever Variable Speed Drive units are employed to control the operation of MV induction motors.

**3.5.4** A harmonic study may be required to assess the harmonic distortion of the supply system for the 12 or 18 pulse VSDs. Should the harmonic study indicate the 12 or 18 pulse VSDs cannot comply with the harmonic values as required by NRS048, harmonic filters will be used to prevent resonance from occurring.

## 3.6 Sparing Philosophy

**3.6.1** The electrical distribution system shall be designed to provide a dual redundant system with high reliability and availability, and to ensure continuous operation of the installation between planned maintenance shutdowns.

**3.6.2** The distribution system of installations shall be configured on the radial feeder and not ring feeder principle with the main distribution busbar having duplex, 100% load rated, incoming supplies. 2x incomers with a split bus and bus section should be more reliable and flexible than the "radial" feed system.

**3.6.3** Main LV distribution switchboard busbars shall comprise of two single bus sections: a "Normal" and an "Emergency" bus.

**3.6.4** Automatic transfer facilities between the two incoming MV supplies shall be provided.

**3.6.5** Automatic transfer between the normal and standby generator supplies shall be provided.

## 3.7 Operating Philosophy

**3.7.1** The electrical operating philosophy will generally be as follows: If any individual supply to a switchboard is lost due to a primary distribution fault and if the primary Incomer protection has not operated, then if the primary supply voltage is available on the standby Incomer, the supply shall automatically transfer to the standby incomer.

A primary incomer Master trip operation is to block the automatic transfer to prevent the standby incomer closing onto a fault.

The Automatic Change-Over (ACO) shall be conducted within 500ms to 1.5sec to accommodate ride through on a VSD/pump motor combination. The transfer will be slow; in that the standby Incomer will only close after the primary Incomer opens to prevent back-feeding currents.

Operating motor drives affected by the temporary loss of power will be re-accelerated by Transnet Pipelines when power has been seen to be restored. VSD auxiliary control circuit power shall be sourced from the UPS to facilitate ride through and reacceleration. During normal operation, the VSD ride through function caters for re-acceleration.

At such time as the primary supply has been re-established, the affected switchboard will be reinstated to its normal operating scenario. This process will be executed manually.

The final Operating Philosophy at each facility will be determined once the supply configurations are finalised.

## 3.8 System Analysis and Calculations

**3.8.1** The following system analysis studies or calculations shall be carried out during the detail design of the power distribution system:

- Load Flow
- Short circuit analysis - confirm switchgear ratings and provide information for protection studies
- Motor starting and acceleration analysis ( only for large drives )
- Harmonic analysis
- Protective relay setting and co-ordination

- Earthing and lightning Protection Study

The following documentation will be created and used during the detailed design phase:

- Electrical Load List
- Electrical Equipment List
- Equipment Datasheets
- HVAC where applicable will require HVAC design criteria, heat load schedules, Layout plans, System flow diagrams, Control philosophy.
- Cable Calculation and Schedule
- Main Incomer Fault Level Calculation
- Single line diagrams
- Room site layout
- Earthing and Lightning Protection Drawing
- Components lists- signed off prior to purchase
- QA/QC plan indicating milestones reflecting client witness of tests, FAT, SAT and Commissioning and Handover processes.

**Data Validation**

All calculations and spreadsheets / lists / drawings / documentation will be reviewed and validated according to the relevant specifications and engineering principles. All documentation must be presented to Transnet Pipelines for review and acceptance .

# 4 Equipment Design Requirements

## 4.1 Switchgear

### 4.1.1 General

a. MV and LV switchgear shall consist of grouped assemblies of free-standing, vertical, metal clad enclosures containing single main busbar systems, removable circuit breakers/switching devices, necessary auxiliary control devices, instrument transformers, relays and metering equipment.

b. MV Switchgear (LV incomers) shall be designed to allow for mechanical interlocking.

c. MV and LV switchgear is to be included in the SCADA monitoring and control system.

d. In general the MV and LV switchgear design has to comply with the Transnet Pipelines specification PL 632 and PL 631 respectively.

e. MV and LV switchgear assemblies for installation in switch rooms or buildings with controlled environments shall be of Transnet Pipelines approved industrial types.

f. HT Switchgear assemblies for installation outdoors shall have weatherproof, vermin-proof, fully gasketed enclosures, adequate lighting and ventilation shall be provided.

g. Switchgear assemblies shall be provided with space heaters to prevent internal condensation.

### 4.1.2 Switchgear / Motor Control Centres

a. Switchgear shall be in accordance with the requirements of the relevant Transnet Pipelines specifications.
b. Data sheets shall be prepared for each equipment item, detailing the specific requirements of the subject equipment.
c. The switchboard shall incorporate incoming units and outgoing units for motor starters, distribution board feeders and feeders to individual consumers.
d. MV motor starters shall be Circuit Breakers. Protection shall be provided by means of approved electronic motor protection relays, and appropriate auxiliary relays as required.
e. LV motor starter and outgoing feeder circuits shall comprise Transnet Pipelines approved MCCB's, ammeters, contactors, overloads, auxiliary relays and earth leakage relays, "Local – Auto" selector switches, start push buttons, stop push buttons, control systems interface relays as appropriate for the required circuit duties.
f. Where indicated on schematic diagrams and as defined by the operating philosophy, incoming and outgoing units shall have facilities for remote control and monitoring by the SCADA system.
g. Electrical / Control Systems Interface panels shall form part of the 400V LV switchboard arrangement.
h. The requirements for main lighting distribution boards and motorised valve distribution boards shall be as shown on the 400V LV switchboard / MCC distribution Single Line Diagram.
i. Distribution boards shall be supplied as integral units in the LV switchboard / MCC arrangement unless specific site requirements (e.g. loads grouped at a significant distance from the substation) warrant the use of field mounted boards.

## 4.2 Protective Devices

### 4.2.1 General

a. The protective relaying system applied to the electrical distribution system shall be based on the use of Transnet Pipelines approved solid-state relaying equipment, supplied by vendor(s) experienced in the design, development and manufacture of such equipment. For medium voltage applications the relays shall be discrete devices. For low voltage applications the relays may either be discrete devices or devices fitted integrally within circuit breakers or other switching devices.
b. Protection relays shall generally comply with the requirements of IEC 60255.
c. The protective relaying philosophy shall be based on single contingency planning, so that the relay system will provide graded fault clearing for one of the following occurrences:
   - failure of either the primary or backup relays to function, or failure in either of their associated secondary or control circuits
   - failure of the circuit breaker to interrupt, including a faulty circuit breaker
d. The protection circuits of all circuit breakers used for automatic disconnection in conjunction with a non-integral protective relaying scheme shall be equipped with hand reset master lock-out relays.

### 4.2.2 Incoming Supply / Generator Protection

Protection arrangements for incoming supplies derived from local power supply authority networks shall be fully co-ordinated with the protection system in operation on the supply network. As a minimum, incoming supply feeders incorporating a step-down transformer shall be provided

with the following protective devices:

- high set instantaneous and time delayed phase fault over-current relays
- time delayed earth fault over-current relays, except when fuse protection is applied (primary winding)
- differential relays (biased type) – on transformers rated above 2000 kVA
- oil temperature indicator (trip and alarm)
- winding temperature indicator (trip and alarm) - above 1000 kVA
- pressure relief device (trip and alarm) - hermetically sealed type transformers only
- restricted earth fault relays (secondary winding) - resistance earth systems only
- facilities for Bucholz trip and alarm protection to be provided

### 4.2.3 Motor Circuits

a. Direct on line starting of MV motors shall be by electrically operated circuit breakers equipped as motor starters.

b. MV motor protective devices shall be Transnet Pipelines approved electronic protection relays.

c. MV Variable speed drive applications shall be fed from suitably equipped electrically operated circuit breaker feeders.

d. Typical Transnet Pipelines LV motor starting philosophy is as follows:

- LV motors ≤ 15kW DOL starting
- LV motors > 15kW –VSD's / Soft Starter application (contractor to provide prices for these options)

e. Cable lengths, P&ID and load schedules may require the use of VSDs on the complete range of motor ratings, the use of VSD application to avoid using two cables per motor installation.

f. LV motors (typically operating at 400V) shall be controlled using Transnet Pipelines approved Type 2 coordinated motor starter combinations.

g. LV motor protective devices shall as a minimum cater for the following:

- Rated short circuit protection
- Thermal overload with single phasing protection (motors rated up to 55kW only).
- Electronic motor protection (motors rated 75kW and above only).

### 4.2.4 General Purpose Feeder Circuits

Protective devices shall be applied according to the application but shall as a minimum include:

- instantaneous and time delayed over-current protection (MCCB with thermal and magnetic trips)
- time delayed earth fault (circuits rated 60 amps and above only)

## 4.3 Metering and Control

### 4.3.1 Main Incoming Supply

Tariff metering and control of an incoming supply from a local power supply authority network shall be as specified by the relevant supply authority. The protection scheme is to include a power analysing relay e.g. Siemens Simeas P.

### 4.3.2 Generator plant incoming supply

The following metering equipment shall be provided on generator control panel / generator circuit breaker panel:

- voltmeter and phase selector switch
- ammeter and phase selector switch
- kilo-watt meter
- power factor indicator
- frequency meter
- hours run counter
- synchro-scope

### 4.3.3 LV Switchboard / MCC

a. The LV switchgear shall comply with Transnet Pipelines Specification PL 631.

b. Incoming supply circuit breakers or isolators shall be equipped as a minimum with the following metering equipment:
   - Line side voltmeter and phase selector switch
   - Busbar voltmeter and phase selector switch
   - off maximum demand ammeters (1 per phase)

c. Outgoing feeder circuit breakers or switches, feeding major load centres, shall be equipped as a minimum with an ammeter connected in the (Y) phase.

d. LV motor starters shall be equipped with an ammeter connected in the (Y) phase.

e. The ammeter shall have a compressed upper scale calibrated up to six times motor full load current.

f. LV motor starters of 15kW and larger shall provide a 4-20mA feedback circuit for current to the control system.

g. LV contactor and switched feeder outgoing circuits shall be equipped with an ammeter connected in the (Y) phase when process or other considerations require indication of operating current.

### 4.3.4 Motor Control Stations

a. Start / stop pushbutton control stations mounted local to motors shall be of the weatherproof industrial duty type. Where appropriate, they shall be designed and certified for installation and use as appropriate for the designated area classification.

b. Start / stop control stations shall normally be installed onto suitable steel supports adjacent to their respective motors. Lock-off type emergency stop push buttons shall be located adjacent to the motor in all cases where the control station is remote from the motor.

c. Motors that can be started from more than one position or started automatically, controlled by a level switch, pressure switch or temperature switch etc., shall in addition, be controlled by a 'Local-Auto' selector switch mounted on the individual motor starter compartment

d. Field mounted ammeters shall only be provided where specifically required and essential for process or operational purposes.

e. No field mounted motor starter installation are allowed.

## 4.4 Power Transformers

**4.4.1** Power Transformers shall be in accordance with the requirements of SANS 780 and SANS IEC 60076 sections 1 through to 10.

**4.4.2** Transformers shall comply with the requirements of the project specification 2684358-U-A00-EL-SP-007.

**4.4.3** Data sheets shall be prepared for each equipment item, detailing the specific requirements of the subject equipment.

**4.4.4** Transformer standard kVA ratings shall be selected as defined in SANS standards. Transformers shall be rated to carry at least 125% of the estimated dual redundant maximum demand of the switchboard it is supplying. The rating shall be based on the naturally cooled full load temperature rise limits defined in the data sheets / specification. (See Sections 3.1.4 and 3.1.5).

**4.4.5** Transformer nominal impedance shall preferably be selected from 'standard' values defined to result in the most economical design commensurate with:

- limiting through fault short circuit current values to permit use of switchgear with standard certified short circuit current ratings
- permitting the starting of the largest connected induction motors, direct-on-line whilst remaining within the voltage regulation requirements of sections 3.4.2 and 3.4.3.

## 4.5 Battery Charger Systems

### 4.5.1 General

Battery Charger systems shall be in accordance with the requirements of the Transnet Pipelines specifications: PL 647 and PL 648.

Data sheets shall be prepared for each equipment item, detailing the specific requirements of the subject equipment.

### 4.5.2 Switchgear Closing and Tripping Supply Unit

a. The switchgear tripping supply nominal output voltage shall be 110V DC.

b. Battery tripping equipment shall be located in the substation in close proximity to the switchboard serviced.

c. Battery tripping systems shall be designed for a standby time of 24 hours.

d. The rectifier and battery system shall be rated to supply the following loads:

- Switchgear standing load, plus battery charging load, plus closing of two circuit breakers simultaneously - applies to rectifier only.

- Switchgear standing load for 24 hours plus tripping of all circuit breakers and latched switching devices twice in succession at the end of the 24 hours period - applies to battery system only.

e. The battery shall be of the sealed type.

## 4.6 UPS System

### 4.6.1 General

UPS systems, shall be in accordance with the requirements of Transnet Pipelines specifications PL 720 and IEC 62040.

Data sheets shall be prepared for each equipment item, detailing the specific requirements of the subject equipment.

### 4.6.2 Station Control System UPS System

a. The UPS system for plant control system / SCADA and communications equipment shall be located in the substation building.
b. SCADA / Control system UPS shall be determined by the technical requirements of the Control System in terms of type, make, model and size.
c. The UPS will require a serial communication interface to the control system to achieve an orderly shutdown of the control system.
d. The UPS system supplying uninterruptible AC power to the plant control and information systems shall comprise a single train rectifier / inverter / battery system with the rectifier/inverter rated to supply 100% of the calculated system load. The system shall incorporate a bypass supply and static switch changeover system.
e. Battery systems shall be designed with a standby minimum time of 30 minutes and shall be of the sealed lead-acid gas recombination type to SANS 1632.
f. The nominal output voltage of the system shall be 220V, 50 Hz.
g. Both the mains and bypass power supplies to the UPS system shall be derived directly from the station 400 V switchboard / MCC with a back-up supply from the standby diesel generator system. A 400 V / 230 V constant voltage transformer is required in the bypass supply link.

## 4.7 Electric Motors

### 4.7.1 General

a. Motors shall normally be 3-phase squirrel cage induction type machines, totally enclosed, fan cooled and adequately rated for the duty required by the driven equipment. Motors shall be certified for use within hazardous areas. Motors for use in hazardous areas shall be Ex ‘d’ rated (Explosion proof), even if located in a Zone 2 area and shall have a minimum degree of protection of IP 55.
b. Motors shall, whenever possible, be purchased as part of the driven equipment package.
c. Data sheets shall be prepared for each motor, detailing the specific requirements of the subject machine.
d. Where variable speed motors are employed with varying frequency inverter systems, the motors shall be designed and rated in a manner that the temperature rise of the motor under operating conditions will remain within safe limits over the entire speed range of the drive.
e. The insulation levels of the motors are to be rated for use with VSD systems

with specific reference to the peak voltage levels. In addition, this added insulation requirement needs to be applied to the VSD cable ratings, primary and secondary.

f. The design shall take into account the heating effect of harmonics generated by the rectifier inverter system and the decrease in cooling effect of fan cooling at reduced speeds.

g. Where drives of this type are supplied for installation within hazardous areas, the motors shall be appropriately certified by the SANS (or a SANS recognised **local** test authority) as being suitable for use in combination with a variable speed drive unit within the designated hazardous area applicable to the locality of the proposed installation, i.e. it shall meet all requirements in respect of zone classification, gas grouping and temperature class for safe operation over the full speed range and respective load duty.

### 4.7.2 MV Motors

a. Motors shall generally be in accordance with the requirements of project specification 2684358-U-A00-EL-SP-010, and IEC requirements IEC 60034 series.

b. Motors shall be designed for operation on 3300V, 6600V or 11000V, 3 phase, 50 Hz power supply systems having an earthed neutral via NER. The NER shall be rated for 50 to 300A for 30 seconds. Final values will be determined by means of a system study.

c. MV motors fed from vacuum circuit breakers shall be fitted with Zork surge suppression devices.

d. MV motors shall be fitted with space heaters. Leads for space heaters shall be terminated in a box separate from the motor main power termination box.

### 4.7.3 LV Motors

a. Motors shall generally be in accordance with the requirements of project specification 2684358-U-A00-EL-SP-005.

b. Motors shall be designed for operation on a 400V, 3 phase, 50 Hz power supply system having a solidly earthed neutral.

### 4.8 Standby Generator

**4.8.1** Where required standby diesel engine driven generator sets shall be supplied in accordance with Transnet Pipelines specifications PL 622H and IEC Specification IEC60034-22 - AC Generators for reciprocating internal combustion engine driven generating sets.

**4.8.2** Alternators shall have continuous capacity 5 % higher than the base rating of the diesel engine driver at power factor from 0.80 lagging to 0.95 leading.

**4.8.3** Alternators shall be totally enclosed, fan cooled, unless installed within a building or purpose-built container type enclosure, in which case an open ventilated drip-proof machine may be used.

**4.8.4** Alternator stator winding shall be suitable for star connection with both ends of each phase winding brought out to the terminal housing.

**4.8.5** Alternator exciter shall be a rotating brushless type, mounted on or coupled to the alternator shaft.

**4.8.6** Alternators larger than 120 kVA shall be equipped with RTD (Resistance Temperature Detector) elements.

**4.8.7** Alternators shall be equipped with space heaters.

**4.8.8** A free-standing generator control panel shall be furnished for installation in the electrical substation. Electrical protection equipment shall be located in the generator circuit breaker or contactor cubicle.

**4.8.9** The selected rating of diesel generators must ensure that the continuous running load on the generator will not be less than 50% of the engine rated output power in order to avoid problems associated with engine choking and resultant loss of reliability. (Note: The minimum rating of diesel generator sets shall be 60 kVA per Transnet Pipelines specification PL622H.

**4.8.10** The day tank capacity shall cater for 12 hours run time fully loaded.

# 5 Facilities Design Requirements

### 5.1 Control and Administration Buildings

#### 5.1.1 General

Buildings shall be located in non-hazardous areas to permit the use of industrial type equipment. A minimum distance of 15 meters from any source of hazard shall be allowed to the nearest point of any building.

Buildings shall be conventional site built, single storey construction and shall be furnished with electrical services. Cable entries to the building shall be arranged for underground cables entering through the floor or in preformed cable trenches. In addition the substation buildings shall have concrete roofs.

### 5.2 Substation Buildings

#### 5.2.1 General

a. Electrical substation buildings shall be of brick construction with a concrete

roof.

b. Substation buildings shall be located in non-hazardous areas to permit the use of standard industrial type switchgear. A minimum distance of 15 meters from any source of hazard shall be allowed to the nearest point of any substation building.

c. Substations floors shall be elevated from grade to provide for a cable entry basement or preformed trenching access.

d. Sleeved underground cable entries to the building shall be arranged for cable access. Draw boxes shall be provided to facilitate cable installation.

e. Substations shall be pressurised to provide a dust free atmosphere. Where specified, air conditioning equipment shall be provided to maintain the temperature within the building at a maximum of 30$^{o}$C. The air conditioning design temperature is selected to provide a margin below the switchgear operating temperatures of 35$^{o}$C average and 40$^{o}$C maximum.

f. MV and LV switchgear equipment will not be located in the same room.

g. Tripping Batteries shall be Valve Regulated Lead Acid type.

   **Note**: Open rack Lead Acid mounted batteries, shall only be employed with Transnet Pipelines approval and shall be installed in a separately ventilated room, furnished to suit the special corrosive and hazardous environments.

h. VSD equipment shall be located in a separate air conditioned room.

i. Substations shall have a double door with a removable door panel to facilitate equipment removal at one end of the building and a personnel door at each end. Each personnel door is to be fitted with panic bar, and shall open outward.

j. Diesel generator sets shall be located within a separate room of the substation building.

k. Power transformers shall be located along the outside of the substation building in fenced enclosures a distance away from buildings.

l. Transformers shall be mounted on a concrete foundation surrounded by a pebble filled / or grated pit, the capacity of which shall be at least equal to the volume of the oil in the transformer. The pit shall either drain into an oily water sewer or a sump be provided from which spillage can be pumped.

m. Firewalls shall be provided between transformer bays whenever more than one transformer is installed, extending at least 300 mm above and 600 mm beyond the transformer. A minimum clearance of 800 mm shall be maintained between transformer extremities and the firewall.

n. All safety labels to be installed within the various areas of plant equipment eg. HV, MV and LV Subs; LV generator rooms; pump house; etc.

### 5.2.2 Space Allocation

a. Minimum working clearances around electrical equipment shall be as follows:
   - 1000 mm minimum from top of equipment to bottom of ceiling
   - 2500 mm between lines of switchgear
   - 1200 mm between rear of the equipment and wall

b. 25 % spare space (or minimum one equipment enclosure tier) shall be allowed within substation buildings at each end of switchboard arrangements sufficient for the extension of the same.

c. Extra space is reserved for operation and maintenance of electrical equipment in accordance with the manufacturer's requirements.

## 5.3 Earthing Installations

### 5.3.1 General

a. A common earthing system shall be provided for electrical system equipment earthing, static protection and lightning protection. The earthing shall be in accordance with the requirements of the IP Model Code of Safe Practice - Part 1: Electrical 1991, SANS 10313, PL 727 and typical earthing drawing PL 727 except where further defined or modified by the requirements of the following sections.

b. A ground resistivity survey shall be carried out to provide data on the ground conditions and the results applied to the related earthing system design.

c. Major electrical equipment such as switchgear, transformers, distribution boards, floodlight towers or poles, control panels, and metallic frameworks for supporting same, shall be directly connected to the earthing system.

d. Static earthing protection shall be provided by connecting steel structures, towers, vessels, tanks, and similar items to the common earthing system.

e. Earthing connections to equipment shall be at purpose designed termination studs. Anchor bolts shall not be used.

### 5.3.2 Earthing Systems

a. Earthing system shall be designed on the ring principle with interconnecting conductors as necessary. This ring shall be connected to earth electrodes or as required by the design parameters.

b. Earthing system installations shall be carried out using PVC sheathed (green/yellow) stranded copper conductor earthing cable both above and below grade. The minimum size shall be 70 mm² except for branch conductors to equipment, which may be a minimum of 35 mm².

c. Earthing conductors shall be run underground at a minimum depth of 500 mm below grade in unpaved areas. In paved areas, conductors may be run on rough grade, under paving. In general, earthing conductors shall be run on the same routes as power and other cable systems.

d. Earthing conductors rising through paving or other concrete work shall be run in suitable protective sleeves, which shall project 75 mm above finished grade level.

e. Earth electrode design shall take account of soil and sub-soil conditions at the respective pipeline facilities site locations. Earth electrodes shall, wherever possible, consist of driven rods and shall be directly connected to an earth busbar mounted above grade, by a short length of 70 mm² cable, PVC sheathed coloured green / yellow.

f. Earth electrodes paralleled in a group, to reduce the earth resistance to the permissible value, shall be spaced apart a distance at least equal to the length of the buried electrode.

g. The resistance of the common earthing system to the general mass of earth, measured at any point on the plant site, shall not exceed 1 ohm.

### 5.3.3 Electrical System Earthing

The method of system earthing at each voltage level shall be as defined in section 3.2.1 of this specification. The points at which system earth connections are to be applied shall be defined on the single line diagrams and earthing layout drawings.

The neutrals of alternators and transformers shall be connected to an adjacent earth electrode directly or through an earthing resistor, as required.

### 5.3.4 Electrical Equipment Earthing

a. Frames of MV motors shall be connected to the earthing grid via a separate single core 70mm² PVC green earth wire run with the motor power cable.
b. Frames of LV motors shall be connected to the earthing system within the motor terminal box by utilising the fourth core of the motor power cable.
c. Note : For cable core sizes greater than 70mm², three core power cable shall be installed and a separate single core 70mm² PVC green earth wire run with the cable to the motor.
d. A copper conductor, 70 mm² minimum, shall be solidly tied into an earth electrode system for earthing substation equipment in a ring formation.
e. A main earthing ring conductor system shall be provided within substation buildings and other rooms containing electrical equipment e.g. control room. The earthing ring shall comprise a number of strategically positioned earthing busbars interconnected by at least a 70 mm² PVC sheathed conductor. The earthing ring shall also be interconnected with the common plant earthing system at a minimum of two separate points.

### 5.3.5 Static Bonding Connections

a. Plant equipment items supplied as assembled units shall be connected to the plant earthing system by a minimum of two separate bonding conductors.
b. Flanges of metallic piping systems that have insulated linings shall be bonded to ensure electrical continuity. A bond shall also be applied at any equipment connection. Flanged joints in other metallic piping systems shall be considered to be inherently electrically continuous.
c. Pipelines shall only be connected to the earthing system where they enter and leave the battery limits. The requirements of cathodic protection systems shall be observed.
d. Road and rail vehicle bonding facilities shall be installed at points in the plant, where classified hazardous products are loaded or unloaded from vehicles. Bonding facilities may also be required in non-hazardous areas if the product being handled is likely to give rise to a build up of static electricity in the vehicle, e.g. bulk powder loading / unloading. Bonding equipment shall incorporate integral local alarm facilities to alert operating personnel if the bonding connection becomes accidentally disconnected.

### 5.3.6 Computer / Instrumentation

a. Appropriately sized earth ring and equipment connections shall be installed in control rooms and other instrumentation equipment rooms as appropriate, for Computer / Instrumentation earthing. The earthing ring used for equipment / enclosure earthing shall be connected to the common earthing system by a minimum of two separate conductors.
b. An insulated earth ring shall be installed in the control room for an 'instrument high quality earth' of less than 1 ohm. This system shall be isolated from common earthing systems and building structures. It shall be connected to the substation main earth bar.
c. Additional earthing systems shall be installed for earthing of intrinsically safe type equipment. Requirements shall be as for the 'clean' earth system.

### 5.3.7 Lightning protection

A lightning study shall be carried out to provide data on the lightning conditions and the results applied shall be applied to the related lightning protection system design after having been reviewed and accepted by Transnet Pipelines.

Where applicable, tall or isolated structures shall be protected against lightning in accordance with SANS 10313.

a. Where applicable, tall or isolated structures shall be protected against lightning in accordance with SANS 10313.
b. Down conductors from air terminals or lightning poles shall be provided with an individual earth electrode as well as a connection to the common earthing system. The resistance to the general mass of earth at individual earth electrodes shall be a minimum of 1 ohms.
c. Provided they are electrically continuous, tall steel structures such as towers or structure columns shall be considered inherently protected against lightning by their connection to the plant earthing system. Bonds across joints may be used to ensure electrical continuity wherever necessary.

## 5.4 Lighting

### 5.4.1 Lighting Facilities

a. Lighting facilities shall generally consist of: All designs to comply with Transnet energy efficiency strategy. LED technology shall be employed.

- A system for supplying “switched” lighting circuits and 230V switched socket outlet circuits that will be permanently energized under normal operating conditions.
- An outdoor lighting system that is only energized at night and which is controlled by a light sensitive switch/photocell (or timer when specified) and contactor arrangement. (Note: in remote stations this facility may additionally be switched).
- Perimeter and mid-area lighting poles shall be mid-hinged.
- The above mentioned systems shall also contain a percentage of lights designated to transfer from the normal to the emergency / diesel generator standby power system whenever the main power supply fails.

b. The facilities of each system shall as a minimum consist of:

- A Low Voltage distribution switchboard located within the 400V switchboard / MCC within the substation building.
- Miscellaneous sub distribution boards as may be required.
- An area lighting distribution board containing 3 phase, and single phase double pole circuit-breakers located within the 400V switchboard / MCC in the substation building.

Note: The area lighting distribution board shall contain an automatic mains fail change over system which shall transfer designated lighting circuitry onto the emergency / diesel generator backup supply in the event of a mains failure. This distribution board shall also contain an area lighting day - night contactor panel which shall switch on the area lighting at night. The contactor control may be affected by a light sensitive switch or a 24 hour timer. A maintenance by-pass switch shall be installed in the distribution board for the purposes of checking the lighting during the daytime.

(Note: in remote stations this facility may additionally be switched and the lights left off during the times when the station is unmanned).

- Transnet Pipelines approved light fittings, switched socket outlets, junction boxes, mid – hinged poles and fixture support structures.

### 5.4.2 Lighting Fittings

a. For the purpose of standardization of the various types of fixtures throughout the various Transnet Pipelines sites of hazardous areas and floodlight fixtures, Transnet Pipelines will select the preferred manufacturer of these items. Specific details will be shown on the lighting layout drawings and / or will be stipulated in the RFP or Contract documentation.
b. In general, luminaires for illumination at grade and on operating platforms shall be energy efficient type.
c. Lighting fixtures for installation within hazardous areas shall be appropriately certified industrial type from a Transnet Pipelines approved supplier.
d. Lighting fixtures for switch rooms shall be energy efficient type, surface mounted industrial type.
e. Lighting fixtures for station offices and / or Control rooms shall be surface or flush mounted commercial type.
f. Lighting fixture type to be approved by Transnet Pipelines prior procurement.

### 5.4.3 Illumination levels

a. The illumination levels attained for normal lighting shall conform to the requirements of the OHS Act, as scheduled in the associated environmental regulations for work places, and any subsequent modifications to the schedule made by the Chief Inspector by notice in the Government Gazette.
b. The recommended illumination levels shall be used for design purposes as the minimum maintained levels. Initial lighting level designs must make allowance for a maintenance-ageing factor.
c. In all respects, lighting installations shall be in conformance with SANS 10098, SANS 10114, Part 1 and SANS 10142.
d. Lighting on rotating machinery must be such that the hazard of stroboscopic effects is eliminated.
e. Glare in any workplace shall be reduced to a level that does not impair vision. The use of antiglare lamps in computer and control rooms shall also be evaluated and considered during the design.
f. The final illumination levels shall be measured at the elevations listed above grade or at floor level and between two adjacent lighting fixtures.
g. Illumination levels and glare index shall be in accordance with the recommendations made in the SANS codes of practice. Typical minimum values applicable to Transnet Pipelines projects are given in the table below. Refer also to the Specification 2684358-U-A00-EL-SP-011: Lighting Installations.

| Location | Luminance (Lux) Horizontal Plane |
|---|---|
| General and Operating Areas | |
| Pump rows, valves, manifolds | 100 |
| Mainline Pumps | 100 |
| Platforms (General area) | 40 |

| | |
|---|---|
| Operating Platforms | 75 |
| Gangways, catwalks, stairways (at floor level) | 20 |
| Ladders and stairs | 50 |
| General areas | 25 at grade |
| Security fence | 5 at grade |
| Pump station main entrances/exits | 50 |
| Marshalling yards | 10 |

Pump station and Buildings

| | |
|---|---|
| Instrument Panel | 200 (vertical) |
| Console | 300 at 750 mm |
| Back of Panel | 200 (vertical) |
| General Area | 300 – 400 |
| Control room | 200 |
| Emergency (Control Room only) | 20 at ground level |
| Pump house/room | 100 |
| Control laboratories and testing | 200 |
| Standby generator room | 100 |
| Battery and charging equipment rooms | 100 |
| Purge air/pressurisation fan rooms | 100 |

Substation Buildings and Yard Areas

| | |
|---|---|
| General Area - Indoor | 150 |
| General Area - Outdoor | 25 |
| General Area - Emergency | 10 |
| HV yard and transformer terrain | 20 |
| HT and LT switchgear rooms | 150 |
| Relay and telecommunications rooms | 100 |
| Transformer rooms | 75 |

Buildings

| | |
|---|---|
| Workshops (rough work) | 300 + local lights for fine work |
| Locker Rooms and Toilets | 100 |
| Laboratories and Offices | 300 |
| General rooms/offices | 300 |
| Stairs and corridors | 100 |

Workshops and Machine Shops

| | |
|---|---|
| General work areas | 100 |
| Tool rooms and work benches | 250 |
| Medium soldering, brazing and welding | 300 |
| Fine soldering and spot welding | 500 |
| Repair of fine work e.g. instrumentation | 500 |
| Inspection and calibration areas | 500 |

Storage Tank Areas

| | |
|---|---|
| Tank - stairs, ladders | 50 |
| External Apron | 20 |
| Pump and manifold areas | 75 |
| General area (where required) | 25 |

Loading Racks

| | |
|---|---|
| General Area | 50 |
| Road Car - loading points | 150 |
| Rail Car - loading points | 100 |

Street Lighting

| | |
|---|---|
| Heavy Traffic (main) | 25 |
| Light Traffic (secondary) | 5 |

| | |
|---|---|
| Parking Areas | 50 |

### 5.4.4 General Requirements

a. Lighting to be energy efficient as a rule.

b. For general area and perimeter lighting, it is preferred not to use high mast light poles, e.g. hoisting cable mechanism; only different lengths of mid-hinged poles.

c. Luminaires shall be spaced to provide uniform lighting distribution on the working surfaces, and in general be arranged for a symmetrical appearance.

d. A maintenance factor of 70 % shall be used in design calculations and the lumen output of lamps shall be the "average through life" value.

e. The sub-circuit loading on each lighting distribution board shall be as follows:

- Maximum current per circuit = 10 amps (with 16 amp protective device).
- Loading for discharge lamps (including fluorescent) = Rated lamp (watts) plus ballast load.

f. Emergency lighting shall be provided as follows:

- Skeleton lighting in Control and Substation buildings.
- Anti-stumble lighting in operating areas.
- Local lighting at critical process points and local instrument panels.
- Stairways and escape routes

g. It is the purpose of the emergency lighting to allow safe movement of personnel rather than provide a high level of illumination. The emergency lighting system shall thus provide for a safe minimum illumination level in all working areas within the station.

h. The Environmental Regulations for Work Places of the OHS Act requires that emergency escape lighting be installed in all indoor work places without natural lighting. The level of luminance for emergency installations within buildings shall not be less than 20 lux at ground level.

i. Emergency light sources shall last long enough to ensure the safe shutdown of the plant and possible evacuation of the workplace.

j. All single-phase circuit-breakers, supplying 230V socket outlet circuits, shall be provided with earth leakage protection.

k. When feeding installations within hazardous areas, circuit-breakers shall be double-pole to isolate both phase and neutral in accordance with SANS 10089.

l. The installation methods for lighting fixtures shall be designed for the environment and hazardous area classification in which they are installed.

m. All lighting fixtures shall be rigidly mounted and firmly fixed to their supports. Installations shall be arranged for ease of maintenance.

n. Lighting circuits shall be protected by 16 Amp, single-pole breakers. The maximum load on any branch circuit shall not exceed 12 Amps.

o. Floodlighting fixtures shall be mounted on Transnet Pipelines approved reinforced concrete or galvanised steel poles.

p. Where floodlights are mounted on poles (or high masts) at a height in excess of 8m, or where the poles are located in areas inaccessible to

vehicle mounted hydraulic work platforms, raising and lowering gear for maintenance of the floodlights or hinged type scissor masts shall be provided.

q. When economically viable to do so the use of floodlighting shall be maximized in operating areas, to eliminate the requirement for several locally mounted fluorescent fixtures.

r. All metallic components of light fittings shall be securely bonded to the station safety earth.

### 5.4.5 Operating Plant Lighting

a. Luminaires in operations areas shall be solidly fixed and not suspended by means of items such as chains and conduits. They shall be mounted such that routine operations and reasonable maintenance can be conducted with safety and without the use of temporary scaffolding.

b. Luminaires for illumination at grade shall be mounted at a minimum height of 2200 mm to underside of luminaires, unless specific conditions require otherwise. Typical installation standard detail drawings shall be prepared and defined on layout drawings for each luminaire location.

c. Use shall be made of floodlights for general lighting of outdoor open areas. Floodlighting luminaires shall be mounted at sufficient elevation and directed so as not to be objectionable or dazzling to operating personnel. Plant structures shall be used where possible for mounting such floodlights, but where poles or towers are used, safe access and a working platform shall be provided for re-lamping and servicing.

d. Luminares for general illumination shall be located as close as possible to items such as instruments and gauges so that special lighting is unnecessary.

e. The site area lighting shall be controlled by 24 hour timers with manual switching where required and over-ride facilities.

f. Local lighting switches shall generally only be provided in enclosed buildings or as detailed in section 5.4.5(g).

g. Lighting switches and MCB distribution boards shall normally be located in the nearest substation. Where necessary: fused cut-outs or MCB units shall be provided on each floodlight pole.

### 5.4.6 Road Lighting

a. Road lighting shall be provided on all permanent metalled roads within the site plot limits only when it is not possible to provide adequate illumination using area and / or perimeter fence floodlighting.

b. Road lighting installations shall comply with the relevant SANS standards.

c. Lighting poles shall support luminaires at a minimum clear height of 6 metres above the finished road surface. Poles to present minimum obstruction to the movement of wide equipment packages on plant roadways.

d. Luminaire types and pole spacing shall be selected to achieve the required levels of illuminance and provide the most economic installation.

e. Power distribution from the station main substation to lighting poles shall be at 400 V, 3 phase, 4 wire, 50 Hz. A junction arrangement shall be provided in the base of each lighting pole, which shall incorporate a MCB and looping terminals suitable for the termination of 4-core power supply cables. The power supply shall be derived directly from a feeder in the 400 V, 3 phase, 4-wire switchboard from the dedicated area lighting distribution board. The arrangement selected shall be the most cost

effective, taking account of the number and rating of feeders required. The power supply to street lighting circuits shall be switched by a 24 hour timer. Manual switching facilities and a manual override shall be provided.

f. Wherever possible lighting poles shall be sited in areas classified as non-hazardous. In the event that poles have to be sited in hazardous areas the selection of the luminaire shall be made accordingly and the fused cut-out shall be replaced by a MCB unit certified for installation and use as appropriate to the area classification.

### 5.4.7 Perimeter/Security Lighting

a. Lighting provided to illuminate perimeter security fences shall be fed from the permanent power supply via an area lighting day-night contactor controlled distribution system.

b. Lighting poles shall support luminaires at a minimum clear height of 6 metres above grade.

c. Luminaire types and pole spacing shall be selected to achieve the required levels of illuminance and provide the most economic installation.

d. Power distribution from the plant main substation to lighting pole shall be at 400 V, 3 phase, 4 wire, 50 Hz. A MCB shall be provided in the base of each lighting pole, which shall incorporate, looping terminals for termination of a 4-core power supply cable. The power supply shall be derived either directly from a feeder(s) in the 400 V plant switchboard or from a dedicated distribution board. The arrangement selected shall be the most cost effective, taking account of the number and rating of feeders required. The power supply to perimeter lighting circuits shall be switched by a 24 hour timer. Manual switching facilities and a manual override shall be provided.

e. Wherever possible lighting poles shall be sited in areas classified as non-hazardous. In the event that poles have to be sited in hazardous areas the selection of the luminaire MCB unit and installation materials shall be suitable for installation in the hazardous area.

### 5.4.8 Building Lighting

Lighting requirements in plant buildings located in non-hazardous areas are defined above in paragraph 5.4.3.

Lighting for control room instrument panels and similar installations shall be designed to illuminate the vertical panel with glare free uniform intensity.

## 5.5 Cable and Wiring System

### 5.5.1 General

a. Electric Cables shall comply with the relevant SANS Specifications.

b. Cable and wiring design to comply with Transnet Pipelines specification PL 727. No cable joints are allowed.

c. Low voltage cables for operation at 600 V or below and used for items such as power, control, and distribution board feeders shall have stranded copper conductors, PVC insulation, extruded PVC bedding, steel wire armour and PVC sheath overall, except for single-core cables which shall

have non-magnetic armour. Minimum conductor size shall be 2.5 $mm^2$, except for signal cable to ETM/L panels which shall be 1.5$mm^2$. Cables shall be flame retardant and UV resistant.

d. Sub-circuit cables for lighting, socket outlets, and other circuits may be run above ground in similar cable to that detailed in Section 5.5.1.2 of this specification. Minimum conductor size for lighting circuits shall be 2.5 $mm^2$ stranded copper.

e. Cables shall be installed in directly buried sleeves, suitably sized for the cable, with adequate free space to ease the installation of the cable. The sleeves shall be of a material that can tolerate hydro-carbon contamination or adverse soil conditions (e.g. sulphate reducing bacteria).

f. Due regard shall be paid to the routing of power cables with respect to electronic instrumentation and other similar low power systems to avoid interference. A minimum separation of 600 mm. shall be allowed between long parallel runs of power and control systems cabling. Where cable routes cross at 90 degrees, a vertical separation of 150 mm minimum shall be acceptable.

g. Small power reticulation in buildings shall consists of conduit or trunking with the respective colour coding: Raw Power(orange); UPS Power (purple); Data(blue); Fire(red).

h. The wire shall be general purpose house wire 1000v rating and shall comply to SANS 10142-1 for the current capacity requires of intended use.

### 5.5.2 Cable Sizing and Selection

a. The short time maximum current carrying capacity of cables shall be considered in conjunction with the current time setting of the electrical network protective system, to ensure that cables do not suffer damage under maximum through fault conditions. The cross-sectional areas of cross-linked polyethylene (XLPE) or EPR insulated cables relative to prospective fault currents shall be assessed from manufacturer's data.

b. Cables shall be sized according to the procedures and requirements set out in the SANS 1507 and SANS 10142 considering the following parameters:

- Continuous current rating
- Voltage drop restrictions
- Short circuit current rating
- Earth loop impedance

c. Manufacturer’s data and rating tables shall be used, when available, for the specific cable type, however in the absence of such information, the ratings etc given in the respective parts of ERA Report 69/30 shall be used.

d. Appropriate rating factors as tabled in manufacturer's data shall be applied in all cases for the following installation parameters:

- Depth of laying
- Ground temperature
- Air temperature
- Grouping of cables

e. The above parameters shall be determined for the installation from either site-measured data or established published data for similar installation conditions.

f. The voltage drop on distribution network cables shall comply with the parameters defined in section 3.4.

### 5.5.3 Underground Installations

**a.** Cables run underground shall be installed in sleeving with draw boxes provided at suitable intervals to facilitate the installation of the cables. 25% spare sleeving shall be provided to facilitate future additions.

b. The routing and arrangement of underground cables, particularly in areas adjacent to substations and control houses, shall be planned concurrently with main pipe routes and vehicle access ways, to give as far as possible, unimpeded direct routes.

c. Medium Voltage distribution cables to on-plot substations shall be installed in separate / segregated trenches and arranged in a single layer. Depth of trench shall be 1000 mm. Pilot and control cables shall be laid alongside their respective feeder cable. Spacing between centres of feeder cables shall be minimum 225 mm.

d. 400 V cables may be installed in a trench with up to two layers. Minimum depth to top side of LV cables shall be 750 mm.

e. Spacing between continuous current carrying LV cables shall be 150 mm. Care shall be taken to locate loaded and unloaded cables alternately where possible to minimise the effects of group de-rating factors.

f. Cables shall be laid on 75 mm of sand and covered with 75 mm of sand. The sand shall be screened to remove sharp objects and compacted to eliminate voids. Two layers of marker tape shall be installed over the cables as indicated on the standard drawings. The sand provided shall have been selected for the most favourable thermal grading available.

g. Motor control cables shall be laid alongside their respective motor power cable.

h. Single-core cables shall be run in trefoil formation held in place by suitable strapping. Where metal sheathed single core cables are used, the metal sheath shall be bonded at the switchboard end only.

i. No cables shall be run directly beneath pipes that follow the same direction as the cables, whether the pipes are laid directly in the ground or above ground.

j. Cable routes in unpaved areas shall be marked with reinforced concrete marker posts, located at each change of direction of the route and at no more than 25 m spacing on straight sections. In paved areas, marker discs embedded in the paving shall identify the trench route.

### 5.5.4 Above Ground Installations and Support Systems

a. Cable trays or ladder racks supported from structures shall be used for overhead multiple cable runs and cables shall be adequately secured in a single layer. Individual cables may be clipped and supported directly to structures, but where such structures are fireproofed, cables shall be clipped to cable tray or supported clear of fireproofing.

b. Cable clips for securing PVC sheathed cables to the tray shall be purpose or site fabricated from PVC sheathed stainless steel strips.

c. Overhead cables shall not be routed close to steel pipelines. A minimum distance of 500 mm shall be maintained between pipes and cables.

d. Overhead cable tray / ladder rack shall be hot-dipped galvanised steel.

e. Tray / ladder rack shall be run vertically only.

f. Straight sections and fittings shall have the provision for covers to be fitted when required for a specific installation.

g. Cable tray / ladder rack proprietary accessories shall be used if available to limit the amount of site fabrication.

h. Proprietary tray / ladder rack factory supplied fabricated sections e.g. bends, tees, joint kits etc., shall be selected from a manufacturers component system and shall be identical to straight sections in materials, rung spacing, and strength.

i. Cable tray / ladder rack installation shall be connected to the common earth system in compliance with Transnet Pipelines specification PL 727.

j. The maximum straight section length of cable tray, when fully loaded in accordance with the manufacturer's recommendation, shall have a minimum safety factor of 1.5.

### 5.5.5 Cable Terminations

a. All cable terminations shall use compression type cable glands complying with the requirements of SANS 1213. Glands shall be manufactured in brass and shall be fitted with sealing washers as appropriate to installation conditions. Glands installed on classified electrical equipment installed in hazardous areas shall be suitably certified. The installation requirements of the respective protection class and certification shall be observed. Cable glands having dual EEx d / EEx e certifications are preferred.

b. Medium voltage terminations shall use terminal box designs suitable for the following alternative termination types:

- ‘Raychem' heat shrink termination kits or equal.
- ‘Elastimold' connectors and bushings or equal.
- ‘Cold Shrink’ terminations or equal.

c. The cable conductors of all terminations shall be fitted with properly sized crimped wire pins, or cable lugs selected on the basis of conductor size and terminal type. Bare copper wire terminations will not be allowed.

### 5.5.6 Cable Identification and Schedules

a. Power cables shall be identified at each end, and where they enter or leave underground ducts, by permanent stainless steel identification tags, bearing the cable reference number allocated on the cable schedules.

b. Cores of both multi-core and single-core cables shall be suitably marked at their termination point with ferrules in accordance with the wire or terminal identification shown on connection diagrams. Core idents shall be of the approved printed lables.

c. Cable terminations at motors and starters shall be made following the positive identification sequence (1-2-3) or (R-Y-B) of the conductors in accordance with the specified phase rotation sequence of the power supply.

d. Cables, except sub-circuits for lighting and socket outlets, shall be identified in accordance with cable schedules. To indicate the service for

which the cable is to be utilised, the overall sheath will be coloured as follows:

| *Application* | *Sheath Colour* |
|---|---|
| 11 kV / 6.6 kV and 3.3 kV Cables | Black |
| 600 / 1000V Cables | Black |
| Communication | Brown |

e. Cables will be allocated a cable type reference, which shall also be used as a drum number prefix. Details shall be included on the project cable schedule.

## 5.6 Electric Surface Heating Systems

a. Electric trace heating systems shall be designed and installed in accordance with Transnet Pipelines approved designs.

b. Electric trace heating systems for winterisation (freeze protection) shall be applied to piping systems, vessels, etc. as defined on P & ID drawings and the piping line list.

c. Heaters applied to pipelines / equipment for winterisation purposes shall preferably be of the self-limiting type.

d. Electric surface heaters and all components and accessories to be installed in a designated classified area shall be certified, as a system, for installation within the designated Zone classification.

e. Heater circuits shall be controlled by air thermostat(s) set to switch 'ON' and 'OFF' between project specified temperature limits. Thermostats used to control heater circuits shall be provided with manual override, except when used as high temperature limiting cut-outs for the purposes of complying with hazardous area certification requirements.

## 5.7 Socket Outlets

### 5.7.1 General

Socket outlets of the types outlined in the following sections shall be provided for maintenance and inspection purposes.

### 5.7.2 Welding Socket Outlets

a. Outlets shall be provided and distributed in plant areas for portable welding supplies and other power requirements. Socket outlets shall be of a Transnet Pipelines approved single standardised type for installation in non-hazardous areas only, such that plugs used on portable equipment will be of a common pattern.

b. 63 amps, 400V, 3-phase, 3-wire plus earth, EEx d certified switched socket units shall be used. No more than two outlets shall be connected to any single circuit, which shall in turn be supplied from a 63 amp MCCB / residual current feeder circuit breaker on the station LV switchboard.

### 5.7.3 Switched Socket Outlets

a. 230V switched socket outlets shall be provided in the operating areas located on the basis of being accessible by use of a 25 m extension lead. Socket outlets shall be of a single standardised type in both hazardous and non-hazardous areas such that plugs used on portable equipment will be of a common pattern.

b. Not more than eight outlets shall be served from a single circuit derived from a 16 amp MCB / residual current circuit breaker on a distribution board in the substation.

c. The socket outlets shall be 16 amps, 230V, 3-pin (double pole and earth), EEx ‘d’ certified switched or unswitched as required for the application.

d. Matching plugs shall be supplied on the basis of one for each outlet.

### 5.7.4 Cathodic Protection

a. Cathodic protection shall be provided for underground structures, submerged structures, tankage and other metallic structures as and where required.

b. A Transnet Pipelines approved contractor shall be appointed to conduct soils surveys, recommend, engineer, design and implement the necessary cathodic protection systems.

c. Bonding Wire and cable for the cathodic protection systems shall be PVC insulated and coloured red for conductors at the +VE potential and black for the conductors at the -VE potential. In process areas susceptible to chemical contamination, such cables shall be PVC insulated and be jacketed with a nylon oversheath.

# Preferred Equipment List

| **HV Yard Equipment** | **Make** |
|---|---|
| Links | Actom |
| Primary Circuit Breakers | Actom |
| Voltage Transformers | Actom |
| Current Transformers | Actom |
| Main Distribution Transformers | Actom |

| **MV Substation Equipment** | |
|---|---|
| Switchgear | ABB/Siemens |
| Protection Relays | ABB/Siemens |
| Variable Speed Drives | ABB |
| Battery Charger | Blue Ginger |
| Power and Check Metering | Schneider |

| **LV Equipment** | |
|---|---|
| Auxiliary Distribution transformers | Powertech |
| LV MCC's/Panels | ABB/Siemens |
| Actuators | Rotork |
| Standby Generators | Cummins with Stanford Alternators / Generator Controls |
| UPS | Eaton |

| **3.3kV MV Motors** | |
|---|---|
| Mainline Motors | ABB/Acton |

# SPECIFICATION FOR ELECTRIC FENCES

## PL675

REV. 000

DOCUMENT APPROVAL PROCESS

| NAME | | POSITION | SIGNATURE | DATE |
|---|---|---|---|---|
| Originator: | Shanil Rugbeer | Electrical Specialist | | |
| Approver: | Bernard Burger | Electrical Manager | | |
| Original date: 03/02/2016 | | | | |
| Effective date: 29/02/2016 | | | | |

## 1. DOCUMENT CHANGE HISTORY:

| The owner of this document is responsible for the revision and control of the document, including updating of the table below, which contains the history of the document with details of each revision. | | | |
|---|---|---|---|
| Date | Previous Rev No. | New Rev No. | Details of Revision |
| 03/02/2016 | | | |
| | | | |
| | | | |
| | | | |
| | | | |
| | | | |
| | | | |
| | | | |
| | | | |

# Table of Contents


**1. DOCUMENT CHANGE HISTORY: ..... 2**

**2. INTRODUCTION ..... 4**

**3. SCOPE ..... 4**

3.1 BACKGROUND TO NKP REQUIREMENTS ..... 4

**4. REFERENCES ..... 5**

4.1 LEGISLATION, SPECIFICATIONS, DRAWINGS, ATTACHMENTS AND EXHIBITS ..... 5

**5. ABBREVIATIONS ..... 6**

**6. DEFINITIONS ..... 8**

**7. SITE CONDITIONS ..... 8**

**8. GENERAL ..... 9**

**9. SYSTEM REQUIREMENTS ..... 10**

**10. ELECTRIC FENCE SYSTEM ..... 10**

10.1 CONTROLGEAR ENCLOSURES ..... 11
10.2 FENCE ENERGIZER ..... 11
10.3 LIGHTNING ARRESTORS ..... 13
10.4 CONDUCTING WIRE ..... 13
10.5 FENCE POSTS, INSULATORS AND LEAD OUT CABLE ..... 14
10.6 CONDUCTOR IDENTIFICATION ..... 16
10.7 WARNING SIGNS ..... 16
10.8 EARTHING AND LIGHTNING PROTECTION ..... 17

**11. INSTALLATION REQUIREMENTS ..... 18**

11.1 CONSTRUCTION ..... 18
11.2 INSPECTION AND TESTING ..... 19
11.3 SPARES AND SPARE TOOLS ..... 20

**12. DRAWINGS AND INSTRUCTIONS ..... 20**

## 2. INTRODUCTION

The objective of this Specification is to establish standards and codes of practice that are required to be adhered to by both Contractor and Client in the design, supply and installation of Electric Security Fences, on all Transnet Pipelines Sites. The work defined in this document should be executed in accordance with the project and quality procedures, life-cycle stages and standard deliverables of the Contractor.

## 3. SCOPE

This Transnet Pipelines Specification defines, as a minimum the technical requirements and general responsibilities regarding the safety, design, supply, manufacture, population, type-testing, performance, constructional and routine testing, delivery to site, site erection, site testing and commissioning requirements for permanent perimeter wall-top Electric Security Fences. Contractors are required to familiarise themselves with all applicable Standards and Codes of Practice listed herein, and to ensure compliance in the execution of any work in terms of this document. Failure to comply may render the contractor liable for corrections at his own cost.

This document does not include specialised security measures that may be required such as CCTV, security guards and other specialty fencing systems.

Any Additional required components not included in the bill of quantities to achieve full system functionality shall be included by Contractor.

These Standards and Codes of Practice should be read in conjunction with all other Specifications and drawings as issued for a particular contract. Where discrepancies occur, these must be brought to the attention of Transnet Pipelines in writing before commencement of work. In the event of any conflict between the contents of any documents forming part of a contract (as listed in the Schedule of Contract Documents) and this document, the former shall prevail.

### 3.1 BACKGROUND TO NKP REQUIREMENTS

The Grading of National Key Points (NKP): Security Advisory Services has graded the Transnet Pipeline Depots in order to determine the Class of the Facilities and the level of security required. The following aspects / phenomena were taken into consideration before grading the depots:

- Location
- Crime threat analysis
- History of aggression against resident / residence
- Strategic reason / value for being a National Key Point

The Transnet Pipelines depots were subsequently classified as National Key Points with a High Level of Security: Level 3.

As a result of this classification NKP provided guidelines for the types and details of acceptable perimeter barriers and gates.

## 4. REFERENCES

Annexure A of the Grading of National Key Points: Security Advisory Service was used as the basis for this specification. It is noted that said document must be used as a guideline and that threats, topographical description and other factors may influence the security system(s) proposed for a site.

### 4.1 LEGISLATION, SPECIFICATIONS, DRAWINGS, ATTACHMENTS AND EXHIBITS

All Work shall be performed in strict accordance with the following described specifications, drawings and other documents, where applicable and which by this reference are made a part hereof.

Where reference is made to a Code, Specification or Standard, the reference shall be taken to mean the latest edition of the Code, Specification or Standard, including addenda, supplements and revisions thereto, in content or numbering.

#### 4.1.1 Applicable Legislation

| Standard | Subject |
|---|---|
| SANS 10400 | The application of the National Building Regulations |
| OHS Act | Occupational Health and Safety Act No. 85 of 1993 as amended |
| Post Office Act | Act No 44 of 1958 |
| Telecommunications Act | Act No 103 of 1996 |
| Government Regulation R1593 | Government Gazette No. 11458 |

#### 4.1.2 SANS Codes of Practice

| Code No. | Title |
|---|---|
| SANS 10108 | The classification of hazardous locations and the selection of electrical apparatus for use in such locations. |
| SANS 10142-1 | The Wiring of Premises<br>Part 1: Low-voltage installations |

| | |
|---|---|
| SANS 10222 -3 | Electrical security installations Part 3: Electric security fences (non-lethal) |
| SANS 60335 -2-76 | Household and similar electrical appliances - Safety Part 2-76: Particular requirements for electric fence energizers |
| SANS 60079 | Explosive atmospheres: Part 14: Electrical installations design, selection and erection; Part 17: Electrical installations inspection and maintenance; Part 25: Intrinsically safe electrical systems |
| SANS 214-1 | Electromagnetic compatibility - Requirements for household appliances, electric tools and similar apparatus Part 1: Emission |
| SANS 60529 | Degrees of protection provided by enclosures (IP Code) |
| SANS 1274- 2014 | Coatings applied by the powder-coating process |
| SANS 1091 - 2012 | National colour standards |

#### 4.1.3 Transnet Pipelines Specifications

The following Transnet Pipelines standard specifications are to be read in conjunction with this document and require separate statements of compliance, which should be included in the tender documents.

**PL727** - Cable, Racking, Trenching & Earthing Reticulation Codes of Practice
**PL711** - Equipment Cabinets to house Electronic Equipment Safety Regulations for Contractors
**PL631 -** Low Voltage Switchgear And Distribution Boards

## 5. ABBREVIATIONS

For the purpose of understanding these Standards, the following abbreviations apply.

| | |
|---|---|
| AC | Alternating current |
| CT | Current Transformer |
| DC | Direct Current |
| EMC | Electro magnetic compatibility |
| FAT | Factory Acceptance Test |
| fn | Rated frequency |

| | |
|---|---|
| HRC | High Rupturing Capacity |
| IEC | International Electrotechnical Commission |
| IP | Ingress Protection |
| ISO | International Organisation for Standardisation |
| LV | Low Voltage |
| mcb | Miniature Circuit-breaker |
| MCC | Motor Control Centre |
| OEM | Original Equipment Manufacturer |
| OHS Act | Occupational Health and Safety ACT |
| PE | Protective Conductor |
| PEN | Combined Protective Earth & Neutral |
| PTTA | Partially Type-tested ASSEMBLY |
| RCC | Regulatory Certificate of Compliance |
| SAT | Site Acceptance Test |
| SABS | South African Bureau of Standards |
| SANS | South African National Standards |
| SCPD | Short Circuit Protective Device |
| SPD | Surge Protection Device |
| TPL | Transnet Pipelines |
| TTA | Type-tested ASSEMBLY |
| UPS | Uninterruptible Power Supply |
| Ue | Rated operational voltage |
| Uimp | Rated impulse withstand voltage |
| Un | Rated voltage |
| VT | Voltage Transformer |

## 6. DEFINITIONS

The following Definitions are consistent with the Transnet E5 Agreement and General Conditions of Contract and apply to this specification in its entirety.

**CHIEF EXECUTIVE** (Transnet Pipelines) means the officer appointed as Chief Executive (Transnet Pipelines) of Transnet Limited or any person lawfully acting in that capacity.

**ENGINEER** means any officer in the office of the Chief Executive (Transnet Pipelines) deputed by the Chief Executive (Transnet Pipelines) to supervise and take charge of the contract.

**PLANT** means any machine, excluding a tool, and any vehicle, excluding a passenger vehicle, used on site for the carrying out of the Works.

**EQUIPMENT** means any device not forming a permanent part of the Works, used on site for the carrying out of the Works, and also any temporary building, which is required for the carrying out of the Works, and which is erected on site.

**TOOL** means any instrument, powered or otherwise, which is accepted as a hand tool by the industry concerned and which is normally used in a manual operation by an individual labourer, artisan or workman.

**MATERIAL** means any constructional substance or ingredient that shall form part of the permanent Works and the substances in excavations and earthworks.

**DRAWINGS** means the drawings referred to in any specifications, schedule of quantities and prices and any alterations of such drawings made or approved in writing by the Engineer and such other drawings as may from time to time be furnished or approved in writing by the Engineer.

**SITE** means the land and any other place on, under, over, in or through which the Works are to be executed or carried out and any other land or place made available by Transnet in connection with the Works.

**WORKS** means the works to be executed in accordance with the Contract.

## 7. SITE CONDITIONS

7.1 The equipment shall be designed to operate continuously at its rated capacity, at the specified ambient temperature and site elevation conditions as detailed in the datasheets. Typically these conditions are tabulated below:

| | |
|---|---|
| Ambient operating temperature | -5 to 40 °C (Daily average +35 °C) |

| | |
|---|---|
| Maximum relative humidity | 0 to 95 % |
| Maximum altitude | 0 to 2000 above sea level |
| Lightning conditions | Severe, max ground flash density 11 flashes per km² per annum |
| Exposure conditions | Salt laden as well as industrial atmosphere |

7.2 **Electrical Conditions**.

7.2.1 The system of supply shall be 3 phase, 4 wire, 50 Hz alternating current with earthed neutral at a nominal voltage of 400/230 Volts.

7.2.2 The voltage may vary within the range of 95% to 105% of the nominal. All equipment installed shall be suitably rated.

## 8. GENERAL

8.1 The Controlgear Enclosure, components, busbar systems and cables shall comply with Transnet Pipelines specification **PL631** (Specification For Low Voltage Switchgear And Distribution Boards).

8.2 The electric fence shall be 8 strands mounted on top of a solid wall, steel palisade perimeter fence or steel mesh fence, and cantilever sliding gate and shall provide a physical barrier to detect any intrusion attempts.

8.3 The system shall operate as 2 to 16 zones (as specified), automatic, supervised, detection sensor system, capable of integration with the Security Management System (SMS) to detect and annunciate an attempted breach of the perimeter fence by an intruder. Should any person attempt to defeat the electric fence by way of climbing, touching, cutting or spacing the wires an alarm shall be annunciated as a perimeter alarm on the security management system.

8.4 The Electric Fence System (EFS) shall:

- Be installed on the perimeter barrier fence as described in the perimeter fence specification and integrated to the security management system.

- Monitor the status of fence cabling, devices, tampers and the like and provide control of zone status (i.e. isolate/access/secure)

- Provide independent zone control and alarm display via the security management system.

- Provide full performance and functionality as described in the relevant specification clauses.

## 9. SYSTEM REQUIREMENTS

9.1 The electric fence system shall be made up of a horizontal grid of alternate positive and earth wires. The electric fence shall be a proven system with demonstrated performance to detect:

a. A short on the fence caused by climbing or other interference with the fence structure.
b. Cutting of any wire or lead-out to the fence structure.
c. Tampering with any of the system enclosures, energizer monitor units, or remote keypads.
d. The accidental or willful loss of mains power, battery power, and the communication system of the electric fence controllers to the security management system.

9.2 Fence line energizer performance and alarm sensitivity programming in each zone shall be achieved through local keypad command, and will include the ability to cut power from the energizer in the event of alarm activation.

9.3 Warning signage as required by SANS 60335-2-76:2006(IEC 60335-2-76) shall be provided to both the internal and external sides of the fence to alert personnel of the dangers associated with the non-lethal voltage.

9.4 The EFS energisers should have test reports establishing compliance with safety standards and associated amendments of SANS 60335-2-76 and SANS 10222-3 Additionally the controllers should have test reports showing compliance with noise and emission standards SANS 214-1:2009 (CISPR 14 – 1) Electromagnetic compatibility.

9.5 The fence structure itself should be built to comply with the requirements of SANS 60335-2-76 and SANS 10222-3.

9.6 Any area of non-compliance must be stated.

## 10. ELECTRIC FENCE SYSTEM

The electric fence system equipment shall include but not limited to the following:

a. Controlgear enclosure
b. Fence energizer unit

c. Lightning arrestors

d. High tension stainless steel wire of at least 1,6mm$^2$

e. Fencing posts, stays, intermediates, brackets, wire tensioners and insulators.

f. Warning signs

g. High tension insulated cabling and conduit

h. Earthing System

## 10.1 CONTROLGEAR ENCLOSURES

10.1.1 Controlgear Enclosures shall be stainless steel, with minimum ingress protection of IP55. Particular attention shall be given to the ventilation of the enclosure, to eliminate build-up of excessive heat caused by the sun or internal heat generation. All necessary precautions shall be taken to ensure that the temperature of the air in any portion of the assembly does not rise more than 15°C above ambient air temperature.

10.1.2 Where specified, an enclosure shall be provided to house the energizer unit, energizer key-pad, surge suppressor, terminal strips and shall have cable access from the bottom.

10.1.3 Detailed information of the enclosure and frames shall be submitted to the TPL engineer for acceptance. The Contractor shall construct and install foundations , brackets , plinths , etc.

## 10.2 FENCE ENERGIZER

10.2.1 The sectors and zones of the electric fence shall be powered and controlled by programmable combined energizer monitor units.

10.2.2 The energizer units shall not have an output energy rating of less than 4.0 joules and shall be capable of maintaining an output voltage in excess of 8000 volts over the distance of the wire in any zone.

10.2.3 The energizer unit shall be programmed by PIN operated individual keypads that can be located up to 500m from the parent unit, if required.

10.2.4 Energizers shall be resistant to atmospheric surges entering from the fence.

10.2.5 The energizer monitor units shall have the following minimum features:

a. Be able to be programmed, networked and controlled from various user interfaces, local and remote. Remote access TCP/IP protocols supported shall include http, ppp and snmp.
b. Be able to be expanded into multi-zoned system.
c. Monitor the status of fence cabling, device, tampers and provide control of zone status (isolate/access/secure)
d. Provide independent zone control and alarm display via remote monitoring.
e. Have two monitored zones in both high voltage and earth wire.
f. An energizer unit shall provide potential free contacts for dual Zone Alarms, Energizer Healthy and Energizer Fault.
g. Detect a short on the fence caused by climbing or other interference with the fence structure.
h. Detect cutting of any wire or lead-out to fence structure.
i. Detect tampering with any of the system enclosures, energizer monitor units or remote keypads.
j. Detect the accidental or wilful loss of mains power, battery power, and the communication system of the electric fence controllers to the remote monitoring system.
k. Alarm outputs to include time programmable siren and strobe light to visually indicate an alarm condition.
l. High voltage and earth wire monitors to alarm if wires are tampered with.
m. Connectable to armed response.
n. Gate monitor input to monitor position of gate.
o. Lightning and power surge suppression.
p. Panic button input.
q. Battery backup system.

10.2.6 Programmable features shall include but not be limited to the following:

a. Fence line voltage options
b. Alarm trip voltage options
c. Fence Alarm Delay Time ( system sensitivity) options
d. Duress alarm signalling
e. Keypad and controller cabinet tamper alarm signalling
f. FASE mode ( Fence Alarm Stops Energizer)
g. Low voltage monitoring mode
h. Output tests and diagnostic mode

10.2.7 The model of Energizer Unit for Electric Fencing shall be Merlin Stealth (Nemtek) – Dual Zone or similar approved by TPL.

10.2.8 The Energizer Unit shall have a suitably certified mains power supply and battery backup of not less than 8 hours. The power supplies for all fence controllers shall be connected to a manufacturer approved surge arrestor and not directly to a mains power point. Fence controllers shall be earthed in accordance with applicable standards and the recommendations of manufacturers for specific energizer monitor units.

10.2.9 Electric fence energizers shall not be installed in close vicinity of alternating current or communications distribution boxes (or both) (see SANS 10142-1)

10.2.10 All electric fence energizers shall comply with the EMC requirements for electric fence supply units as given in SANS 214-1.

## 10.3 LIGHTNING ARRESTORS

10.3.1 Lightning arrestors shall comply with the requirements of SANS 10222-3, Annex G and shall be installed at the point of connection between the electric fence and the energizer or as close to it as possible.

10.3.2 Lightning arrestors shall be connected to the 'live' wire(s) and an earth electrode.

10.3.3 Two lightning arrestors shall be used, i.e. one on the outgoing 'live' wire and the other on the return 'live' wire. The three earth electrodes installed near the energizer may be used for earthing the lightning arrestor.

10.3.4 The lightning arrestor connection terminals cannot be installed in such a position as to be subject to any tensioning, but shall be connected to the electric fence by separate connecting wires.

## 10.4 CONDUCTING WIRE

10.4.1 The electric fence system shall form an array horizontal, pre-tensioned, electrified steel wires carried on high quality insulators with vertical spacing of not more than 100mm.

10.4.2 The fence wire shall be a minimum 1.6mm$^2$, solid stainless steel and shall provide the best current carrying capacity, resistance to corrosion, be of a low resistance (<10 Ω/metre) and be of sufficient tensile strength (as per manufacturer's specification) for its requirements and application.

10.4.3 Wire tensioning can be achieved by end and in-line spring strainers and should not be excessive – no more than 20kg load per wire. It should be possible to squeeze together any two neighbouring wires with moderate hand pressure.

10.4.4 If the fence is cascaded downwards in steps causing gaps bigger than 150mm an additional insulator and an additional earth wire must be strung to prevent gaps on the sloping.

10.4.5 Bare high-tension conductor shall be positioned as follows:

a. bare high-tension conductors shall be used in the composition of the physical electric fence barrier;

b. plant growth and vegetation shall be kept from coming into direct contact with the conductor or causing arcing, and should be maintained regularly;

c. any foreign objects and conductors not forming part of the electric fence installation shall be kept from coming into direct contact or causing arcing;

d. the bare high-tension conductors shall be at least 30 mm from any foreign object that is not part of the electric fence installation;

e. additional factors such as wind, dew, rain, frost and snow shall be taken into account when positioning the bare high-tension conductors, to prevent inadvertent contact or causing arcing to any foreign objects; and

f. bare high-tension charged conductors shall not be placed inside any wireway.

10.4.6 For protection against electromagnetic induction from overhead power lines, the requirements specified in SANS 60335-2-76 shall be adhered to.

## 10.5 FENCE POSTS, INSULATORS AND LEAD OUT CABLE

10.5.1 Fencing posts or brackets shall be manufactured from heavy galvanized steel and be sufficiently rigid to withstand the tension of the electric fence. Each Electric fence post shall be installed on top of the perimeter fence and on top of sliding gate posts.

10.5.2 Posts should be spaced no more than 3m apart.

10.5.3 For posts requiring pre-punching or pre-drilling galvanizing shall occur after all fittings, mounting holes and the like are provided.

10.5.4 Insulators shall be made from high quality 100% virgin High Density Polyethylene and guaranteed against UV degradation and shall comply with the requirements of SANS 10222-3; Annexure A.

10.5.5 All high voltage lead-out or underground cable shall be double insulated with an alloy or steel wire core of not less than 1.6mm$^2$ diameter. Double core double insulated cables may be used for long lead-outs.

10.5.6 All lead-out cabling should be contained in metal/bosal conduit and every effort must be made to keep it in a single unbroken length leading out to the zone.

10.5.7 Joining of lead-out cabling to the fence line wires must be done using crimp sleeves, crimp connectors, and heavy duty line clamps. All joints shall be suitably insulated.

10.5.8 Joints and terminations shall not:

a. adversely affect the current-carrying capacity of the conductor;

b. adversely affect the insulation resistance of the cable in the case of insulated conductors;

c. be made in any connector, bend, elbow or tee-piece of a conduit;

d. allow the strands of a stranded conductor to spread; and

e. require strands of a stranded conductor to be cut away to allow connection of the conductors (e.g. to terminals).

10.5.9 Joints on the fence bare conductors shall be:

a. made with ferrules;

b. soldered, where wire wrap joints are used; and

c. sealed with a suitable insulating material or by soldering, to reduce the galvanic effect caused by using dissimilar materials.

10.5.10 No Joints on insulated high-tension conductors shall be permitted unless authorised by the Transnet Engineer, and then shall be made in such a way that it would not be possible to touch any live part with the standard test finger (see SANS 60529).

10.5.11 Insulated fence high-tension cable shall not run:

a. in the same trench or wireway with a mains alternating current supply cable;

b. in the same wireway with the cables or wires of telecommunication, radio and signaling circuits;

c. where it is likely to be damaged by liquids such as oil, acid, acetone and alkali or by gases such as sulphur dioxide;

d. within 150 mm of hot services such as hot pipes and flues if the heat is likely to damage the cable, unless the cable is cooled or shielded from heat;

e. in a position where it is likely to be damaged, unless it is mechanically protected;

f. parallel to any other cable(s) for a distance exceeding 200 mm if the distance between the parallel cables is less than 200 mm. In the event of one of the cables being run in steel conduit, or the other cable being steel armoured cable, this requirement shall not apply.

g. in high risk areas such as chemical plants, gas storage areas (see SANS 10087), flammable liquids, etc. In this, the safety requirements of the relevant specifications shall be taken into account.

10.5.12 All such HV cabling must be kept at least 150mm away from any LV cabling. Site engineers should be consulted to ensure there is no risk of interference with any data, communication, PLC, or other LV cabling on site.

## 10.6 CONDUCTOR IDENTIFICATION

10.6.1 A conductor shall be identifiable at its terminations unless its purpose is obvious.

10.6.2 The means of identification for an AC circuit shall be in accordance with SANS 10142-1.

10.6.3 The means of identification of a high-tension insulated circuit may be by colours, letters, or a combination of these as follows:

a. the neutral/earth continuity conductor shall be identified by colours black, green or green/yellow only or by being a bare conductor;

b. the neutral/earth continuity conductor shall be identified by the letters “HT-“;

c. the live continuity conductor shall be identified by the colour red only;

d. the live continuity conductor shall be identified by the letters “HT+”; and

e. the colours, symbols or letters shall be applied at both the ends of the insulated conductor by means of durable marking (e.g. insulating sleeves with colours, symbols or letters).

## 10.7 WARNING SIGNS

10.7.1 Warning signs shall be placed:

a. at each gate;
b. at each access point;
c. at intervals not exceeding 10 m;
d. adjacent to each sign relating to chemical hazards for the information of the emergency services.

10.7.2 Any part of an electric security fence that is installed along a public road or pathway shall be identified at frequent intervals by warning signs securely fastened to the fence posts or firmly clamped to the fence wires.

10.7.3 The size of the warning sign shall be at least 100 mm × 200 mm. The background colour of both sides of the warning sign shall be yellow.

## 10.8 EARTHING AND LIGHTNING PROTECTION

10.8.1 All earthing and lightning protection shall be in accordance with the requirements of SANS 10222-3.

10.8.2 The system to be employed shall be copper electrodes plus return earth wire.

10.8.3 The electric fence energizer shall not be earthed to the same earth systems as used by the local electricity supplier or communication provider (or both).

10.8.4 The minimum distance between the electric fence earth electrode and any electric supplier or communication system earthing shall be in accordance with the requirements of SANS 10222-3; Annex C.

10.8.5 All earth electrodes shall be a minimum length of 1.2 m with a minimum diameter of 16 mm.

10.8.6 Earth electrodes shall be manufactured out of copper clad steel, copper or stainless steel.

10.8.7 Earth electrodes should be inserted into the ground as vertically as possible. In the event of areas with loose rocks, the earth electrodes can be inserted at a maximum angle of 45 °.

10.8.8 All the earth wires on an electric fence shall be connected together when connected to an earth electrode.

10.8.9 The connecting lead used to connect to any earth electrode, from the energizer or the electric fence wire conductor, shall be of a similar or larger diameter than the electric fence's wire conductors. (This will exclude stainless steel wire, unless the diameter is a minimum of 2 mm).

10.8.10 In the case of very rocky areas, where earth spikes cannot be inserted, measures shall be taken to provide an earthing system that will provide the same characteristics as those applicable when an earth spike is inserted.

10.8.11 A distance of at least 2 m shall be maintained between the energizer earth electrode and any other earthing system's connected parts such as the power supply system protective earth or the telecommunication system earth.

10.8.12 Three earth electrodes shall be installed in a close proximity to the electric fence energizer. The earth electrodes shall be linked together and inserted at a minimum distance of the length of the earth spike from each other.

10.8.13 The energizer shall be connected to the earth electrode with an insulated wire-conductor connecting lead. The earth electrode shall be connected to the electric fence earth conductor.

10.8.14 Electric security fences shall have earth electrodes inserted at a maximum distance of 30 m apart, measured from the energizer or fence connection point. These additional earth electrodes will exclude the three earth electrodes installed near the energizer.

10.8.15 A maximum earth resistance of 300 Ω, shall be maintained between electric fence earth electrodes. The measurement of this is to be done with an earth resistance meter.

10.8.16 All connections to earth electrodes shall be made above ground, by means of bolts, crimped lugs and PVC taped. Inspection wells shall be provided comprising of steel, pre-cast concrete or PVC surrounds complete with covers, to facilitate periodic inspection and testing.

10.8.17 Earthing conductors rising through paving or other concrete work shall be run in suitable protective sleeves which shall project above finished level.

## 11. INSTALLATION REQUIREMENTS

### 11.1 CONSTRUCTION

11.1.1 The electric fence system shall be installed by a manufacturer approved contractor with specialist expertise and experience in their required fields. The use of suitably licensed tradesmen is compulsory

11.1.2 The fence structure itself should be built to comply with the requirements of SANS 10222-3.

11.1.3 The system shall be installed such that corners, gates, wall interfaces and posts do not cause a security weakness. Anti-climb configurations shall be fitted at all corners, double end strains, gate posts, and any other location where applicable.

11.1.4 The electric fence system shall be installed such that the safety of all persons is maintained during installation and subsequent system of operation.

11.1.5 The electric fence contractor shall be responsible for all cabling, conduit or duct, trenching, concrete, cutting and making good to the satisfaction of the Transnet representative.

11.1.6 All equipment shall be installed in the locations directed by the Transnet representative.

11.1.7 All electric fence equipment shall be labelled as detailed in the latest revision of Transnet Pipeline Specification PL 631.

11.1.8 A complete fence layout drawing shall be provided indicating as a minimum the position of the different zones, energiser, access gates and strain tensioners.

## 11.2 INSPECTION AND TESTING

11.2.1 The contractor is responsible for all inspection and testing. TPL reserves the right to inspect the items at any time during fabrication to ensure the materials and Workmanship are in accordance with the specifications and reference drawings.

11.2.2 All electronic modules and components utilized within the system shall be functionally tested and burned in by the manufacturer prior to system assembly.

11.2.3 A test program shall be established to demonstrate that each system component will perform satisfactory in service.

11.2.4 The contractor shall submit a test procedure to the TPL Project Manager or his representative for review and approval.

11.2.5 These test procedures shall include the provision for assuring that the pre-requisites for a given test have been met and that the test is performed under suitable environmental conditions by appropriately trained personnel using recently calibrated test equipment.

11.2.6 All zones shall be tested and a test report signed off by the contactor and Transnet representative. Testing shall include the following:

a. Test fence line voltages
b. Test all fence alarms by shorting the fence and cutting a wire
c. Test FASE mode
d. Test all tamper alarms
e. Test all system controls and monitoring
f. Any other tests as appropriate for the site

11.2.7 The Contractor shall provide Valid Electric Fence System Certificate of Compliance as detailed in SANS 10222-3.

11.2.8 The Electric Fence System Certificate of Compliance shall be accompanied by a test report in a format approved by the Electrical Engineer.

11.2.9 Where an addition, alteration, replacement or change has been effected to an electric fence installation for which an Electric Fence System Certificate of Compliance was previously issued, the Contractor shall provide a certificate for at least the addition, alteration, replacement or change.

### 11.3 SPARES AND SPARE TOOLS

11.3.1 The contractor shall submit a list of two (2) years operational and maintenance spare parts, special tools (if required) with prices and provide complete commissioning, start-up spare parts for all equipment..

## 12. DRAWINGS AND INSTRUCTIONS

The Contractor shall issue to the Engineer, documentation as per specific contract requirements. Where not specified, the Contractor shall provide one set of sepias, 3 copies of drawings and 1 electronic media of “As Built” drawings, in their native format, of equipment which have been installed on site.

Handbooks, spares lists and maintenance instructions shall be issued to the Engineer in triplicate at the time of handing over the equipment.

All Documentation issued shall be in full compliance with Transnet Pipelines Specification PL100 Drawing Standard and in particular:

- **PL101** Plant & equipment Tag numbering Standards
- **PL102** Equipment, Instrument & Electrical Symbology Standard
- **PL103** General Drawing Standards

The CONTRACTOR shall furnish the following documentation as a minimum:

a. Datasheets.
b. Mechanical and Electrical Detailed Design Documentation.
c. General Assembly Drawing with foundation load data, cable connection and support details.
d. List of Operational Spare Parts.
e. Operation and Maintenance Manuals.
f. Electric Fence System Certificate of Compliance as detailed in SANS 10222-3.

# SPECIFICATION FOR EQUIPMENT CABINETS TO HOUSE ELECTRONIC EQUIPMENT
# PL 711

REV. 010


Copyright © Transnet Pipelines, All rights reserved, including rights to amendments

# APPROVAL

| RESPONSIBILITY | DESIGNATION | SIGNATURE | DATE |
|---|---|---|---|
| **COMPILED BY** | Designation :<br><br>Name : | | |
| **APPROVED BY** | Technical Manager | | |
| **ACCEPTED BY** | Technical Manager – M & I SD<br>Technical Manager – M & I ND<br>Technical Manager – M & I HO | | |
| **ACCEPTED BY** | Technical Manager – Elec SD<br>Technical Manager – Elec ND<br>Technical Manager – Elec HO | | |
| | | | |


Copyright © Transnet Pipelines, All rights reserved, including rights to amendments

# DISTRIBUTION

| COPY | ISSUED TO ORGANISATION / DESIGNATION | INDIVIDUALS NAME |
|---|---|---|
| MASTER | Transnet Pipelines Library | |
| 1. | Technical Manger M & I – Head Office | |
| 2. | Technical Manger M & I – Southern Districts | |
| 3. | Technical Manger M & I – Northern Districts | |
| 4. | Technical Manger Electrical – Head Office | |
| 5. | Technical Manger Electrical – Southern Districts | |
| 6. | Technical Manger Electrical – Northern Districts | |
| | | |


Copyright © Transnet Pipelines, All rights reserved, including rights to amendments

# AMENDMENT RECORD

| REV | REV DATE | CHG REQ NO. | CHANGE SUMMARY | PAGES AFFECTED |
|---|---|---|---|---|
| 003 | 30/10/95 | n/a | Document approved for distribution | All |
| 004 | 07/05/99 | n/a | Document revised to incorporate Project Tele (PYP233) Standards | All |
| 005 | 30/07/99 | n/a | Cabinet Specifications updated. | Sec 6.1, 6.2 |
| 006 | 11/05/00 | n/a | Cabinet Specifications updated – Siemens comments added. | All |
| 007 | 05/10/00 | n/a | Labelling / Earthing Specifications added. | All |
| 008 | 10/04/01 | n/a | Instrument Junction Box Allocation added | All |
| 009 | 01/09/02 | n/a | Grafoplast Core Identing Std changed | All |
| 010 | 01/08/07 | n/a | Grafoplast Core Identing Std and FAT Test procedures modified. Transnet Pipeline logo added. | All |
| | | | | |
| | | | | |
| | | | | |
| | | | | |


Copyright © Transnet Pipelines, All rights reserved, including rights to amendments

# TABLE OF CONTENTS

1. INTRODUCTION ..... 6

2. SCOPE ..... 6

2.1 General ..... 6
2.2 Application to Work Activities ..... 6

3. REFERENCE DOCUMENTATION ..... 7

4. SPECIFICATIONS ..... 8

5. ABBREVIATIONS & DEFINITIONS ..... 8

6. EQUIPMENT MARSHALLING CABINETS ..... 10

6.1 General ..... 10
6.2 Construction of Cabinets ..... 10
6.3 Ventilation ..... 12
6.4 Power Distribution ..... 12
6.5 Mounting of Equipment ..... 12
6.6 Rack Mount Installations ..... 13
6.7 Cabinet Layout Design ..... 13

7. FIELD JUNCTION & TERMINATION BOXES ..... 13

7.1 General ..... 13
7.2 Field Junction Boxes ..... 14
7.3 Instrument Termination Boxes ..... 14

8 INSTALLATION CODES OF PRACTICE ..... 15

8.1 AC Distribution ..... 15
8.2 DC Distribution ..... 15
8.3 Equipment ..... 15
8.4 Cable Marshalling ..... 16
8.5 Earthing Requirements ..... 18
8.6 Cabinet and Equipment Labelling ..... 19
8.7 Panel Wiring Colour Coding Standards ..... 20

9. FACTORY ACCEPTANCE TEST PROCEDURES ..... 21

APPENDIX 1 ..... 23

APPENDIX 2 ..... 24


Copyright © Transnet Pipelines, All rights reserved, including rights to amendments

# 1. INTRODUCTION

The objective of this Specification is to establish standards and codes of practice that shall be required to be adhered to by both Contractor and Client in the design, supply and installation of Equipment Cabinets to house Electronic Equipment, both indoors and outdoors, on all Transnet Pipelines Sites.

# 2. SCOPE

## 2.1 General

This document defines as a minimum, the technical requirements and general responsibilities regarding the design, supply, population, pre-staging, delivery, installation and commissioning of Equipment Marshalling Cabinets (to be installed in the Control Room and used to house electronic equipment) and Field Junction Boxes on all Transnet Pipelines sites, whether it be by the Client or Contractor, for and on behalf of Transnet Pipelines. In this regard, contractors are required to familiarise themselves with all applicable Standards and Codes of Practice listed herein, and to ensure compliance in the execution of any work in terms of this document. Failure to comply may render the contractor liable for corrections at his own cost.

These Standards and Codes of Practice should be read in conjunction with all other Specifications and drawings as issued for a particular contract. Where discrepancies occur, these must be brought to the attention of Transnet Pipelines in writing before commencement of work. In the event of any conflict between the contents of any documents forming part of a contract (as listed in the Schedule of Contract Documents) and this document, the former shall prevail.

## 2.2 Application to Work Activities

The Standards and Codes of Practice contained herein apply to all installations requiring Equipment Cabinets to house Electronic equipment and includes amongst others the following activities:

- Design, supply and installation of Control Room Equipment & Marshalling Cabinets
- Design, supply and installation of Instrument Field Junction Boxes
- Design of Electrical and Instrument Equipment Interfacing with Control Systems


Copyright © Transnet Pipelines, All rights reserved, including rights to amendments

# 3. REFERENCE DOCUMENTATION

3.1 The requirements of the materials, design, layout, fabrication, assembly, erection, examination, inspection and testing of equipment and facilities on site shall be in accordance with the relevant sections of codes: -

a) ASME/ANSI.B31.3 - Chemical Plant and Petroleum Refinery Piping

b) ASME/ANSI.B31.4 - Liquid Transportation Systems for Hydrocarbons, Liquid Petroleum Gas, Anhydrous Ammonia and Alcohols

c) SABS 089:Part II-1965 - The Petroleum Industry Part II: Electrical Code

d) SABS 0142 - Code of Practice for Wiring of Premises

e) SABS 089 - Part II - The Handling, Storage and Distribution of Petroleum Products (Electrical Code)

f) SABS 0198 - "The Selection, Handling and Installation of Electric Power Cables of rating not exceeding 33 KV".

g) API 2003 - Protection against ignitions arising out of static, lightning and stray currents

h) SABS 03 - The Protection of structures against lightning.

i) SABS 086 - The Installation and Maintenance of Electrical Equipment used in explosive atmospheres. Refer to Section 2 for hazardous area classifications.

j) SABS 1274 - “Coatings applied by the Powder Coating Process”

j) DIN 41494 - Specification for Panel Mounting Racks

k) DIN 24185 - Specification for Air Filters used in General Ventilation

j) Government, local authorities or other statutory bodies' regulations, laws, requirements or customs which are more stringent than those specified in this project specification.

3.2 The following standard specifications are to be used for reference purposes and need to be noted by Contractors in order to signify familiarity and compliance with the requirements. It is expected of Contractors that they be familiar with the applicable clauses and that these will be adhered to in the execution of any work in terms of this specification. Contractors will be required to confirm that they are able to meet these requirements.

a) SABS 0108 : 1995 The Classification of hazardous locations and the selection of electrical apparatus for use in such locations

b) The Occupational Health & Safety (OHS) Act No. 85 of 1993.

c) SABS 0314 Flameproof Enclosures for Electrical Apparatus

d) SABS 0549 Intrinsically Safe Electrical Apparatus

e) API Manual of Petroleum Measurement Standards Chapters 4 to 12


Copyright © Transnet Pipelines, All rights reserved, including rights to amendments

IP Chapter 10 and Papers 2 and 3

f) SABS 969 Enclosures for electrical apparatus

g) BS 5490 Classification of degrees of protection provided by enclosures

h) BS 229 Flameproof enclosures for electrical apparatus

i) BS 1259 Intrinsically safe electrical apparatus and circuits for use in explosive atmospheres

j) BS 4683 Electrical apparatus for explosive atmospheres

h) Safety Regulations for Contractors

i) Technical Instruction No. 16 - Contractors Work Permit Procedures.

j) VDE Standards

3.3 Where no specific rules, regulations, codes or requirements are contained in this specification nor covered by the above mentioned codes, the contractor shall, in consultation with Transnet Pipelines, adhere to internationally accepted modern design and engineering practices in the Petroleum Industry.

# 4. SPECIFICATIONS

4.1 The following standard specifications are to be read in conjunction with this document and require separate statements of compliance, which should be included in the tender documents.

PL727 Specification for Cable, Racking, Trenching & Earthing Reticulation Codes of Practice

PL631 Specification for Low Voltage Switchgear & Distribution Boards

Safety Regulations for Contractors

# 5. ABBREVIATIONS & DEFINITIONS

5.1 For the purpose of understanding these Standards, the following abbreviations apply.

| | |
|---|---|
| ANSI | American National Standards Institute |
| C & I | Control and Instrumentation |
| IEC | International Electrotechnical Commission |
| ISA | Instrument Society of America |
| SABS | South African Bureau of Standards |

5.2 The following Definitions are consistent with the Transnet E5 Agreement and General Conditions of Contract and apply to this specification in its entirety.

CHIEF EXECUTIVE (Transnet Pipelines) means the officer appointed as Chief Executive (Transnet Pipelines) of Transnet Limited or any person lawfully acting in that capacity.


Copyright © Transnet Pipelines, All rights reserved, including rights to amendments

ENGINEER means any officer in the office of the Chief Executive (Transnet Pipelines) deputed by the Chief Executive (Transnet Pipelines) to supervise and take charge of the contract.

PLANT means any machine, excluding a tool, and any vehicle, excluding a passenger vehicle, used on site for the carrying out of the Works.

EQUIPMENT means any device not forming a permanent part of the Works, used on site for the carrying out of the Works, and also any temporary building which is required for the carrying out of the Works and which is erected on site.

TOOL means any instrument, powered or otherwise, which is accepted as a hand tool by the industry concerned and which is normally used in a manual operation by an individual labourer, artisan or workman.

MATERIAL means any constructional substance or ingredient which shall form part of the permanent Works and the substances in excavations and earthworks.

DRAWINGS means the drawings referred to in any specifications, schedule of quantities and prices and any alterations of such drawings made or approved in writing by the Engineer and such other drawings as may from time to time be furnished or approved in writing by the Engineer.

SITE means the land and any other place on, under, over, in or through which the Works are to be executed or carried out and any other land or place made available by Transnet in connection with the Works.

WORKS means the works to be executed in accordance with the Contract.


Copyright © Transnet Pipelines, All rights reserved, including rights to amendments

# 6. EQUIPMENT MARSHALLING CABINETS

This specification details standards and codes of practice to be adhered to in the supply of both Equipment Marshalling Cabinets (used to house Electronic Equipment) at all Transnet Pipelines Sites.

## 6.1 General

6.1.1 Unless stated elsewhere, the Contractor shall be responsible for the design, supply, procurement, population, prestaging, upliftment, installation and commissioning of all elements associated with equipment marshalling cabinets.

6.1.2 Where equipment, peripherals, switchgear, or instrumentation from various suppliers or manufacturers are offered for controlling various subsystems or portions of a subsystem, it will be the responsibility of the Contractor to ensure that the various portions are fully integrated into a single coherent system.

6.1.3 It will be the responsibility of the Contractor to ensure that all cabinets supplied are completely suitable for the application.

6.1.4 Where cabinets and equipment for an installation or project are supplied by different suppliers or subcontractors, it will be the responsibility of the Contractor to ensure that all equipment cabinets for the installation match in both design and colour, to the complete satisfaction of the Engineer.

6.1.5 The cabinets shall be attractively styled and able to harmonise with any modern computer arrangement by virtue of colour and design.

6.1.6 Transnet Pipelines will prefer equipment cabinets of modular design, capable of housing different configurations of equipment.

6.1.7 The dimensions of the cabinets shall conform to standard specification DIN 41494.

6.1.8 All unpainted metallic components of the cabinet and contents shall be treated with an approved anti-corrosion process such as zinc passivated plating, zinc plating or chromium plating. This shall include all bolts, nuts, washers and screws.

6.1.9 The cabinets shall be treated against corrosion and painted using baked epoxy powder process to SABS 1274-1979, to achieve a textured finish. Minimum thickness of the paint shall be 60 micron.

Color standards to be adhered to are as follows:

| | |
|---|---|
| Doors, Covers, Frames. | Beige (RAL 7032 ) |
| Mounting Plates. | Orange ( RAL 2000 ) |
| Plinth. | Anthracite ( RAL 7011 ) |
| Bottom Gland Plate. | Zinc Passivated Finish |

6.1.10 On all matters on which this specification is silent, the approval of Transnet Pipelines must be obtained through the Engineer. Additional specifications will be provided as required.

## 6.2 Construction of Cabinets


Copyright © Transnet Pipelines, All rights reserved, including rights to amendments

6.2.1 All materials used in the construction of the cabinets shall be of the best quality and of the class most suitable for the purpose for which it is required. Unless otherwise specified or approved, all materials shall be to the most recent SABS, DIN or British Standards Institution specifications where applicable, or to such published standards applicable in the country of origin. Tenderers must quote the authorised standards to which materials in the cabinet offered conform.
See Appendix 2.1

6.2.2 The frame of the cabinet shall be of a steel construction, the upright and horizontal members having a minimum thickness of 1,5 mm.
See Appendix 2.2

6.2.3 The cabinet shall be equipped with 19" vertical mounting members where required for mounting equipment. The mounting members shall be made of steel, with a minimum thickness of 2mm, and shall be pre-punched along the entire length, with a pattern of holes on universal centres of 15.88mm – 14.88mm – 12.70mm, designed to accept standard captive nuts of size M6, without interfering with the front or rear panels of equipment to be mounted. It will be preferred if the mounting members could be positioned at any pre-punched depth to suit different equipment.

6.2.4 The side panels of the cabinet shall be made of sheet steel having a minimum thickness of 1.2mm. The side panels must be easily removable for access to equipment. It must be possible to form a single suit of cabinets, with inter-cabinet access by removing side panels and bolting cabinets together.
See Appendix 2.3

6.2.5 The bottom of the cabinet must be provided with a suitable plinth 100mm high manufactured of steel, having a minimum thickness of 1.5mm, to allow for bottom cable entry. The cabinet base shall be sealed against the ingress of rodents, by means of a suitable galvanised gland plate.
See Appendix 2.4

6.2.6 The top of the cabinet shall consist of a steel panel of minimum thickness of 1,5 mm. The panel should make provision for adequate ventilation of the cabinet.

6.2.7 The rear of the cabinet shall be fitted with a full-length removable hinged door. The door shall be manufactured of steel having a minimum thickness of 1.2mm. It will be preferred if the hinges are reversible to allow for either left or right hand opening.
See Appendix 2.5

6.2.8 The front of the cabinet shall be fitted with a door having a steel frame fitted with a full-length single sheet of smoked, flame retardant Plexiglas (ACRO glass tinted, colour 505), when either instruments, barrier racks, PLC I/O distribution racks are fitted into the cabinet. Non glazed doors will be fitted to all other cabinets not containing instruments. It will be preferred if the door hinges are reversible.

6.2.9 The doors and panels of the cabinet shall be effectively sealed against the ingress of dust and shall carry a protection rating of IP 54 minimum.

6.2.10 Both front and rear doors of the cabinet shall be fitted with suitable handles and locking devices so that the doors of the cabinet may be secured. **Locking devices shall comprise of a 6mm square key, complete with insert handle, equal or similar to Sarel type 63600**. A 'key' shall be supplied with each lock.
See Appendix 2.6

6.2.11 Both front and rear doors shall be fitted with catches that are capable of maintaining the doors in the closed position when unlocked. Both front and rear non-glazed doors shall be fitted with suitably sized (A4 minimum) documentation pockets, where required.
See Appendix 2.7


Copyright © Transnet Pipelines, All rights reserved, including rights to amendments

## 6.3 Ventilation

6.3.1 Adequate ventilation must be provided for the cabinet. The temperature inside the cabinet may not rise by more than 10°C above the ambient temperature of the equipment room over the operating temperature range. Precautions must be taken to prevent localised hot spots.

6.3.2 Where necessary, ventilation fans or blowers may be fitted to assist with cabinet ventilation. Any fan or blower used must be designed for long life, having only sealed ball bearings, which are lubricated for the life of the bearing. The ventilation units must have a minimum life expectancy of 25 000 hours.

6.3.3 The air intake of the cabinet shall be fitted with a removable dust filter. The filter material must be readily available for replacement purposes and should comply at least with standard specification DIN 24185 class EU 3.

6.3.4 All ventilation fans, blowers used shall be powered from a 24 V DC supply.

## 6.4 Power Distribution

6.4.1 Equipment Marshalling Cabinets shall contain both 220 VAC and 24 VDC Power Distribution.

6.4.2 220 V AC Power shall, wherever possible be derived from a suitably rated Uninterruptible Power Supply source and routed within the cabinet/s via a suitably rated two-pole isolator/breaker. All 220 V AC circuits shall be individually protected by means of suitably rated miniature circuit breakers, on an individual equipment basis. Earth Leakage protection shall be supplied to protect amongst others, plug and light circuits, in compliance with SABS 0142.

6.4.3 Separate surface mounted switch-socket outlet units shall be provided for in panels where required, to supply UPS power. Switch-sockets shall be housed in 120 x 85 x 50 pressed steel boxes, and shall comprise of the dedicated UPS three pin type shuttered socket base rated for 16A at 220V AC (red in colour).
See Appendix 2.8

6.4.4 All cabinets shall contain 24 V DC Fluorescent lights both front and rear, rated at 8W minimum, and activated manually by integral light switch.
See Appendix 2.9

6.4.5 All mains power wiring and distribution shall conform to applicable South African wiring regulations (SABS 0142). All 220V AC and 24V DC circuits shall be protected by appropriately rated miniature circuit breakers, with a spare capacity of 10% installed for future use, and labelled as spare.

## 6.5 Mounting of Equipment

6.5.1 All equipment mounted in the cabinet shall be mounted only by means of the mounting members intended for this purpose.

6.5.2 All equipment inside cabinets shall be completely accessible without having to disturb wiring or equipment. Where it is necessary to mount cabinets near walls or where equipment is mounted back to back, swing frames may be used as a method of last resort and provided that prior permission has been obtained from the Engineer. In this regard, equipment shall be mounted on adequately rated steel telescopic slides having steel bearings. Steps must be taken to limit the extent to travel of the slides.


Copyright © Transnet Pipelines, All rights reserved, including rights to amendments

## 6.6 Rack Mount Installations

6.6.1 All spare rack positions as well as individual spare card positions shall be covered by means of suitable blanking plates.

6.6.2 All blanking plates shall be manufactured to the same tolerances, standards and dimensions as the equipment contained in the cabinet.

6.6.3 All blanking plates shall be retained in position by means of captive screws held in the blanking plate itself.

6.6.4 The front panels of any sliding chassis or removable unit shall be equipped with approved handles.

6.6.5 Where a blank panel is installed to cover equipment in the rack, the blank panel shall be marked with the designation of the equipment, which it covers.

## 6.7 Cabinet Layout Design

6.7.1 Prior to commencement of cabinet population, design approval shall be obtained from the Engineer. Design approval shall entail as a minimum, the submission of the following documentation:

- Equipment marshalling cabinet layout diagrams, to scale and reflecting component detail
- Equipment marshalling cabinet wiring diagrams, detailing all internal wiring reticulation, power distribution and earthing arrangements
- Technical specifications of all equipment to be installed within the panels

6.7.2 Requirements of the materials, design, layout, fabrication, assembly and erection shall, where relevant, be in accordance with Transnet Pipelines approved typical PLC Panel Layout Diagrams, which form part of this Specification.

Unless otherwise stated, general equipment cabinet design shall comply with the installation codes of practice detailed in Section 8 of this standard.

# 7. FIELD JUNCTION & TERMINATION BOXES

This specification details standards and codes of practice to be adhered to in the supply of Field Junction Boxes and Termination Boxes at all Transnet Pipelines Sites.

## 7.1 General

7.1.1 Contractors shall be responsible for ensuring that all Junction Boxes and Termination boxes supplied are completely suitable for the application.

7.1.2 On all matters on which this specification is silent, the approval of Transnet Pipelines must be obtained through the Engineer. Additional specifications will be provided as required.


Copyright © Transnet Pipelines, All rights reserved, including rights to amendments

## 7.2 Field Junction Boxes

7.2.1 Requirements of the materials, design, layout, fabrication, assembly and erection shall, where relevant, be in accordance with Transnet Pipelines approved typical Field Junction Box Layout Diagrams, which form part of this Specification.

7.2.2 All materials used in the construction of the cabinets shall be of the best quality and of the class most suitable for the purpose for which it is required. Unless otherwise specified or approved, all materials shall be to the most recent SABS, DIN or British Standards Institution specifications where applicable, or to such published standards applicable in the country of origin. Tenderers must quote the authorised standards to which materials in the cabinet offered conform.

7.2.3 Field Junction Boxes shall comply with the following specifications:

Material : 304/316 Stainless Steel, 1.5mm thick min.
Finish : Brushed
Access : 6mm square key lockable
Gland Plate : Separate, pre-punched
Rating : IP 65
Mounting / Gland Plate: 304/316 Stainless Steel

7.2.4 Each cabinet shall make provision for a suitable insulated screen bar to be installed at the bottom of the cabinet and utilised for interconnection of cable overall screens. The bar shall be supported on robust insulating spacers and will have a minimum clearance of 20mm to the sheet steel panel.

High tensile phosphor bronze or zinc passivated (or SS304 if external to JB) plated nuts, bolts and lock washers shall be provided through the screen bar at each connection point and at least five additional holes shall be provided or future connections, each being fitted with nuts and bolts above. Connection points shall be evenly spaced along the length of the screen bar, and clearly labelled as such.

7.2.5 Unless stated elsewhere, the Contractor shall be responsible for the design, supply, procurement, population, prestaging, upliftment, installation and commissioning of all elements associated with Field Junction Boxes. In this regard, prior to commencement of cabinet population, design approval shall be obtained from the Engineer. Design approval shall entail as a minimum, the submission of the following documentation:

- Field Junction Box layout diagrams, to scale and reflecting component detail
- Field Junction Box wiring diagrams, detailing all internal wiring reticulation, power distribution and earthing arrangements where applicable
- Technical specifications of all equipment to be installed within the panels

Transnet Pipelines have standardised on the allocation of field instrumentation to Junction Boxes on the basis of individual Device Groups (i.e on a device group per junction box basis). Any deviation from this standard will need prior approval from Transnet Pipelines.
(Device Group allocations have been detailed in Transnet Pipelines Specification PL101).

7.2.6 Unless otherwise stated, general Field Junction Box design shall comply with the installation codes of practice detailed in Section 8 of this standard.

## 7.3 Instrument Termination Boxes

7.3.1 Where Instrument Cabling is not able to be glanded and terminated directly into the Instrument itself, Termination Boxes are required to be provided. Termination Boxes shall be


Copyright © Transnet Pipelines, All rights reserved, including rights to amendments

mounted in an accessible position near the Instrument and shall be equipped with correctly rated terminals.

7.3.2 Instrument Termination Boxes shall comply with the following specifications:

Make : Pratley No 1
Material : Aluminium Alloy Epoxy-coated
Rating : IP68

# 8 INSTALLATION CODES OF PRACTICE

## 8.1 AC Distribution

8.1.1 All mains power wiring and distribution shall conform to current applicable South African wiring regulations (SABS 0142). All 220 VAC circuits shall be separately protected by appropriately rated miniature circuit breakers located in the front of the panel/s.

8.1.2 Mechanical protection, in the form of touch proof terminals or perspex covers with appropriate danger/warning labels, shall be installed to prevent inadvertent contact with wiring and terminals, and shall be designed in such a way as to not impede access to MCB distribution as a whole.

8.1.3 MCB's shall be clearly labelled as to their functionality (what equipment is supplied) and supply voltage by means of a laminated legend plate located on the inside door panel of the cubicle housing the respective MCB's. In addition, all MCB's shall be individually labelled alongside the breaker so as to enable rapid visual identification of MCB's. Refer to Section 8.5 for details on Label Specifications.

## 8.2 DC Distribution

8.2.1 All DC wiring and distribution shall conform to current applicable South African wiring regulations (SABS 0142). All 24 VDC circuits shall be separately protected by appropriately rated miniature circuit breakers located in the front of the panel/s, and shall include for the following functions:

- Supply to 24 VDC powered equipment
- Supply to Field Device groups

8.2.2 MCB's shall be clearly labelled as to their functionality (what equipment is supplied) and supply voltage by means of a laminated legend plate located on the inside door panel of the cubicle housing the respective MCB's. In addition, all MCB's shall be individually labelled alongside the breaker so as to enable rapid visual identification of MCB's. Refer to Section 8.5 for details on Label Specifications.

## 8.3 Equipment

8.3.1 All equipment shall be mounted in the front of the equipment marshalling cabinets, and shall be mounted to ensure easy access to functionality and wiring.

8.3.2 All equipment shall be 24 V DC powered, where possible, unless the Engineer has granted prior permission.


Copyright © Transnet Pipelines, All rights reserved, including rights to amendments

8.3.3 The following components have been standardized on by Transnet Pipelines, and require to be adhered to by the contractor. Contractors wishing to offer alternate makes may do so with prior written permission from the Engineer.
See Appendix 1 for component and part numbers.

## 8.4 Cable Marshalling

8.4.1 Unless stated otherwise, all cabling, inclusive of power, control, data and instrument shall be bottom entry. Cable entry shall be via pre-punched gland plates, and shall be glanded within the cabinet to which the associated cable is terminated. Glanding of cables in cabinets different to that in which the cable is terminated shall not be permitted. Spare cable entries shall be plugged using appropriately sized and rated blanking plugs. The use of "push-out" blanking inserts to plug cable entries shall not be permitted.

8.4.2 Cable identification shall be as follows:

1. Where Cable Tags are fixed to the cable within the cabinets:

   Grafoplast Trasp Series 130 Gull-wing transparent PVC sleeves (30mm in length), with printed text black on white background, fastened onto the cable via means of Stainless Steel cable ties. Text height to be 3mm minimum.

2. Where Cable Tags are fixed to the cable outside the cabinets:

   Grafoplast Targa Metal TGT System (Carrier Rail length: 58mm for 7 characters, 82mm for 11 characters, 106mm for 15 characters) 316 Stainless Steel Markers, with punched text 6 mm height minimum, fastened onto the cable via means of Stainless Steel cable ties.

8.4.3 Transnet Pipelines have standardised on the allocation of field instrumentation signals to Junction Boxes on the basis of individual Device Groups (i.e. on a device group per junction box basis). In addition and where possible, discrete and analogue signals are also to be clearly separated and identified within these Junction Boxes. In the case of Junction Boxes with dual terminal rails, discrete signals will be terminated on the LHS terminal rail, and analogue signals on the RHS terminal rail. Where PLC and Metering signals are terminated into the same Field Junction Box, PLC signals will be terminated on the LHS terminal rail, and Metering signals on the RHS terminal rail.

8.4.4 Note that whilst field junction boxes may incorporate both analog and discrete signals, IS and non-IS signals may not be marshalled within the same junction box or within the same multi-core cable.

8.4.5 Termination of individual cable cores in the termination strips will be such that all Control System related cabling will be terminated to the RHS of termination strips, whilst all field instrumentation/equipment cabling will be connected to the LHS of termination strips. In the case of Field Junction Boxes with dual terminal strips, multi-core cabling will be glanded in the centre of the gland plate and terminated into terminal rails provided, running from the centre PVC Trunking outwards. Individual Instrument cables will then be terminated into the terminal rails provided, running from the outermost PVC Trunking inwards.

8.4.6 Field Termination rails within the Control System Marshalling Enclosures shall be allocated on the basis of a one-one match with field cabling i.e. will match the allocations made within the respective Filed Junction Boxes. PLC Termination rails within the Control System Marshalling Enclosures shall be divided into units on the basis of PLC I/O Modules, thus ensuring grouping of Control and Feedback signals on the basis of I/O marshalling.

8.4.7 Sizing of PVC Trunking and related conductors shall comply with SABS 0142 of 1981 code of Practice Reg. 5.4.1 (f). In addition to the above requirements an additional 25% Spare capacity shall be allowed. The manufacturer shall ensure that all trunking is adequately sized. All cabling


Copyright © Transnet Pipelines, All rights reserved, including rights to amendments

shall be neatly arranged and loomed within the trunking, using proprietary plastic cable straps available for this purpose. Spiral lacing shall be used for flexible or semi-flexible looms.

Allowance shall be made during PLC Cabinet Layout design to ensure that a minimum distance of 50mm is maintained between terminals and PVC Trunking, in order to ensure that conductor core idents are visible at all times.

The manufacturer shall also ensure that a space of not less than 50mm shall be maintained between trunking and any component or object.

Transnet Pipelines has standardised on PVC slotted trunking for use in cable and wiring marshalling (Non IS circuits – grey in colour, IS circuits – blue in colour).

8.4.8 All PVC Cable Trunking carrying IS Rated circuits shall be coloured blue (both Field J/B and Equipment Cabinets). It is preferred that trunking manufactured for this purpose be used, however, painted trunking will be acceptable if it meets the following conditions.

- Method of painting must prevent cracking or peeling of the paint and all trunking used in the panel must be painted as a batch to prevent colour mismatch.

8.4.9 Individual Cable Screens shall be terminated onto screen bars running the full length of the cabinet alongside the respective terminal rails, and from there to the Instrument Earth rail provided in the bottom of the cabinet/s. Overall screens shall be terminated directly onto the Electrical Earth rail provided in the bottom of the cabinet/s.

8.4.10 All Cable Screens (both individual and overall) shall be isolated from inadvertent contact using suitably sized yellow/green coloured sleeving. (Except IS individual screen – shall be sleeved blue.)

**8.4.11** Each conductor/core of a cable shall be fitted with an insulated double crimp lug of the correct size. Pin lugs shall be used for pressure type terminals, with ring and spade lugs used for post type terminals. LeGrand bootlace ferrules shall be utilised for all instrument cabling terminated into pressure type terminals.

Proprietary type wire strippers and crimping tools must always be used.

**8.4.12** Each conductor shall be identified by a Core Identification number, which shall include the number of the terminal into which the core is to be terminated and shall include terminations into termination boxes, field junction boxes, marshalling cabinets and instruments themselves. Plastic sleeving shall be correctly sized to ensure a snug fit on the conductor. Grafoplast printed identification system shall be utilised for all instrument and control cabling (black lettering on white background). Sleeve length of 30mm has been standardised on.

For details of Transnet Pipelines Core Ident Numbering Standards refer to Transnet Pipelines Specification PL727 Rev 6 Section 8.6.

8.4.13 All terminals shall be numbered on both sides consecutively in accordance with design documentation. All terminal rails shall be identified by means of a terminal rail label situated at the top of the termination rail. End stops and end plates shall be used to prevent inadvertent contact with conducting surfaces. Refer to Section 8.5 for details on Label Specifications.

8.4.14 All Cable ends shall be protected by heat shrink to provide protection and prevent moisture ingress.

8.4.15 IS and Non IS Signals are to be run in separate cables.

8.4.16 All spare cores shall be terminated and idented as “spare”.

8.4.14 Digital Output Marshalling


Copyright © Transnet Pipelines, All rights reserved, including rights to amendments

All Digital Outputs shall be galvanically isolated from the field and thus interposing relays are to be supplied and installed. In this regard, these interposing relays shall be driven via open collector PLC digital outputs, with field power being sourced from the field equipment itself. Field power shall only ever consist of either + 110V DC, + 50V DC or + 24V DC respectively. Compliance with the following minimum specifications are required:

| | |
|---|---|
| Input Voltage | 24V DC |
| Max Output Voltage | 250V |
| Rated Output Current | 5A |
| Min Switching Frequency | 30 Hz |
| MTBF | $5 \times 10^6$ operations |

Where field voltages exceed + 24V DC, cabinet terminals shall be labelled as high voltage.

8.4.15 Digital Input Marshalling

All Digital Inputs shall consist of voltage free contacts fed from the common 24V DC Field Power Supply located in the Control Room. These feeders shall be protected by suitably rated Circuit Breakers on an individual Device Group basis.

Conversion from intermediate voltages (eg. 50 VDC, 110 VDC) may require the installation of interposing relays in order to convert from intermediate voltages.

8.4.16 Analogue Input Marshalling

All loop powered Analogue Inputs shall be powered directly from the respective PLC Analogue Input Modules themselves whilst all self powered Analogue Inputs shall be powered directly from suitably rated MCB's located in Equipment Marshalling Cabinet.

8.4.17 IS Barrier Protection

Contractors are to note that most discrete and analogue signals associated with Field and Pump Set Instrumentation are terminated in Hazardous Areas and consequently IS Protection shall need to be provided.

8.4.18 Surge Protection

Transnet Pipelines Pump Stations are situated in areas of high risk in terms of lightning strikes and thus adequate Surge Protection shall be required to be provided by the Contractor. Contractors are to note that responsibility for the provision of adequate surge protection lies with the Contractor and that Transnet Pipelines will not regard damage to equipment resulting from a lightning strike or power surge as unavoidable, except in instances of a "direct strike". Rectification of all resultant damage shall be undertaken at the Contractor's cost.

## 8.5 Earthing Requirements

8.5.1 Earthing and bonding conductors shall be sized and installed in compliance with regulations detailed in the current SABS 0142 Standard Regulations for the Wiring of Premises and in SABS 03 as applicable. Conductors shall comprise of multi stranded, PVC insulated cable, of gauge not less than 6mm2, cross sectional area.

8.5.2 All cabinet doors shall be earthed to the panel earth using a braided copper conductor of not less than 6mm², cross-sectional area.


Copyright © Transnet Pipelines, All rights reserved, including rights to amendments

8.5.3 Each Equipment Cabinet (excluding Field Junction Boxes) shall make provision for a suitable 'electrical earth' to be installed at the bottom of the cabinet and comprising of a solid 50 x 5mm min copper bar running the entire length of the cabinet in the front. The bar shall be bolted to the base framework with a minimum clearance of 40mm from the sheet steel gland plate.

The following equipment shall be earthed directly to the electrical earth bar, via adequately sized PVC insulated copper cabling (green/yellow):

- Electrical equipment housings/backplanes. (Where earth terminals have been provided, the earth wiring cross section shall be the maximum compatible with the size of the terminals provided. Where earth studs have been provided, the earth wiring cross section shall be in compliance with manufacturer's recommendations. Where not specified, earth cable cross sectional areas shall not be less than 6mm²).
- Cable overall screens.
- Cabinet chassis.

8.5.4 Each Equipment Cabinet (excluding Field Junction Boxes) shall make provision for a suitable "instrument earth" to be installed at the bottom of the cabinet and comprising of a solid copper bar (50mm x 5mm) running the entire length of the cabinet in the front. The bar shall be supported on robust insulated spacers, with a minimum clearance of 40mm to the sheet steel panel, and clearly labelled. The instrument or clean earth shall be insulated from the panel at all times.

The following equipment shall be earthed directly to the instrument earth bar, via adequately sized PVC insulated copper cabling (blue):

- 24 V DC Power supply common rail.
- Barrier/Isolator earth (Earth cable cross sectional area 70 mm2 min).
- Cable individual screens

8.5.5 Earth bar specifications shall comply with the following:

- 50mm x 5mm x full length of Panel.
- Yellow/Green (Electrical) and Blue (Instrument) at regular intervals, so that identification from each panel section is possible.

Sufficient number of holes to be provided on bus sections for all outgoing circuits & 20% spare for double cables. High tensile phosphor bronze or passivated plated nuts, bolts and lock washers shall be provided through the earth bar at each earthing position, with at least 25% additional holes being provided for future connections, all fitted with nuts and bolts.

8.5.6 All panel cubicles to be bonded to each other and to the Main earth bar.

8.5.7 All metal housings shall be earthed.

## 8.6 Cabinet and Equipment Labelling

### 8.6.1 Internal Labels:

All components shall be labelled with their complete "-" Component Identification designation, in accordance with the Transnet Pipelines Label Designation Standard attached to this Specification (Ref: 711-001_PLCLabelSpec). The labels shall be readable/visible after the wiring has been done. Where possible, labels are to be attached on the panel next to the device, but where this is not practical, then, and only then, may the label be placed directly onto the device.


Copyright © Transnet Pipelines, All rights reserved, including rights to amendments

Labels shall comprise of the Traffolyte engraved type, and fixed to the board by means of stainless steel screws or epoxy glue. Finish shall comprise of black letters against a white background, except in the case of cautionary labels where letters shall appear white on a red background.

All lettering shall be in upper-case letters except where standard abbreviations of units are used, e.g. kWh, kVA, etc.

### 8.6.2 Internal Labels: Terminal Rails

All Terminal Rails shall be labelled with their complete "-" Component Identification designation, in accordance with the Transnet Pipelines Label Designation Standard attached to this Specification. (Ref: 711-001_PLCLabelSpec).

Note that two types of Terminal Rail Labels have been defined as follows:
Field Marshalling – label identifies the Cable ID terminated into the terminals
PLC I/O Marshalling – label identifies the PLC ID:Rack No:Slot No of the associated I/O Card

Labels are to be attached to Terminal Rail Label Holders located at the top of the terminal rail.

### 8.6.3 Internal Labels: Equipment

Each device shall be labelled with its complete Functional Identification designation, in accordance with the Transnet Pipelines Label Designation Standard attached to this Specification. (Ref: 711-001_PLCLabelSpec). The labels shall be readable/visible after the wiring has been done. Where possible, labels are to be attached on the panel above the device.

MCB's shall be clearly labelled as to their functionality (what equipment is supplied) and supply voltage by means of a laminated legend plate located on the inside door panel of the cubicle housing the respective MCB's. In addition, all MCB's shall be individually labelled with the respective MCB No's on the front top of the breaker so as to enable rapid visual identification.

### 8.6.4 External Labels:

Labels shall comprise of the Traffolyte engraved type, and fixed to the board by means of stainless steel screws. Finish shall comprise of black letters against a white background, except in the case of cautionary labels where letters shall appear white on a red background.

All lettering shall be in upper-case letters except where standard abbreviations of units are used, e.g. kWh, kVA, etc.

### 8.6.5 External Labels: Panel/Cubicle

All Panel doors shall be labelled with their complete "+" Location Identification designation, in accordance with the Transnet Pipelines Label Designation Standard attached to this Specification. (Ref: 711-001_PLCLabelSpec). Labels are to be attached on the panel door top centre where possible.

## 8.7 Panel Wiring Colour Coding Standards

8.7.1 The following panel wiring standards have been standardised on by Transnet Pipelines and are required to be adhered to when installing internal panel wiring:


Copyright © Transnet Pipelines, All rights reserved, including rights to amendments

| | Core Size | Insulation rating | Insulation Color |
|---|---|---|---|
| **Signal I/O** | | | |
| PLC Digital | 0.5 mm² | 300 V | Grey (+)<br>Grey (-) |
| PLC Analogue | 0.5 mm² | 300 V | Violet (+)<br>White (-) Twisted pair |
| **Power Distribution** | | | |
| 220 V AC Supply | 1.0 mm² | 300 V | Brown (L)<br>Blue (N) |
| 24 V DC Supply | 1.0 mm² | 300 V | Red (+)<br>Black (-) |
| **Earthing Distribution** | | | |
| Electrical Earth | SABS 083 | 1000 V | Green/Yellow |
| Instrument Earth | SABS 083 | 1000 V | Blue |
| Pre-manufactured E.T. Looms | | | Blue, Numbered |

# 9. FACTORY ACCEPTANCE TEST PROCEDURES

9.1 Unless otherwise specified, work and acceptance tests shall be conducted on all equipment at the place of manufacture. Contractors shall be responsible for the compilation of an Acceptance Test Schedule to be used for acceptance testing of the system. The test schedule shall be comprehensive and must cover all aspects of the system to be tested and will be subject to the approval of Transnet Pipelines, prior to commencement of Pre-acceptance Testing.

The successful Tenderer will be responsible for providing all test equipment and facilities required for the period of the acceptance tests such as the Engineer may deem necessary, and to produce a report of the tests concerned.

Transnet Pipelines reserves the right to add or delete any item or test from the test result of hardware failure, re-scheduling of the test will be at the discretion of the Engineer. Transnet Pipelines reserves the right to repeat or incorporate any additional test into the test schedule.

9.2 The following tests shall be required to be performed as part of a Factory Acceptance Test Procedure:

- A physical check of all equipment shall be made against drawings and shall include a check for tightness of connections, correct core identing etc.
- A terminal to terminal routing check of all panel wiring shall be made against drawings and the drawings red-lined accordingly
- Trip element ratings of all supply and distribution breakers shall be made
- Earth leakage tripping shall be made on all circuits
- Effectiveness of earthing system shall be checked
- Powering up of panel shall be conducted and equipment run for a period of three hours. During this time a check for abnormal operating conditions shall be made e.g. Temperature and current.
- Simulation of all discrete and analog signals from the respective field terminals into the respective PLC I/O modules

9.3 The following Panel Inspection Hold Points have been defined by Transnet Pipelines and will require to be complied with:

- Prior to commencement of wiring
- Prior to Functional Testing


Copyright © Transnet Pipelines, All rights reserved, including rights to amendments

---------- End of Document ----------


Copyright © Transnet Pipelines, All rights reserved, including rights to amendments

# APPENDIX 1

Material listing and suppliers.

| | ITEM | SUPPLIER | PART No. | ALTERNATE | PART No. |
|---|---|---|---|---|---|
| 1 | Panel Lights | RS Components | 230-6574 | | |
| 2 | Panel Filters | Weidmuller | PFA3000 | | |
| 3 | Panel Fans | Weidmuller | PF3000 24vDC | | |
| 4 | 20Amp Power supply | Siemens | 6EP1336-1SH01 | | |
| 5 | 10Amp Power supply | Siemens | 6EP1334-1SL11 | | |
| 6 | 5Amp Power supply | Siemens | 6EP1333-1SL11 | | |
| 7 | Power supply Rail | Siemens | | | |
| 8 | Overvolt Protection | Weidmuller | 118706 | | |
| 9 | Change over Relays | Siemens | 3TH 3022-OB | | |
| 10 | Circuit Breakers | Siemens | 5SX2---/7 | | |
| 11 | Neutral Rail | Weidmuller | 034890 | | |
| 12 | Neutral Supports | Weidmuller | 106120 | | |
| 13 | Neutral 4mm Yokes | Weidmuller | 047538 | | |
| 14 | Neutral 16mm Yokes | Weidmuller | 050288 | | |
| 15 | 0 Volt Rail | Weidmuller | 034890 | | |
| 16 | 0 Volt Supports | Weidmuller | 106120 | | |
| 17 | 0 Volt Yokes | Weidmuller | 047531 | | |
| 18 | Rhomberg Relays | Rhomberg | ST110/30VDC-DP | | |
| 19 | Relay Bases | Rhomberg | S3-B | | |
| 20 | 16Amp S/O Dedicated | Voltex | CT6896/6546/103 | | |
| 21 | Terminals 2.5mm | Weidmuller | 102378 | | |
| 22 | Terminals plc disconnect | Weidmuller | 101110 | | |
| 23 | Terminals Valve disconnect | Weidmuller | 068746 | | |
| 24 | Terminals I/S Circuits | Weidmuller | 102158 | Weidmuller | 059008 |
| 25 | Terminal Bridge 2.5mm | Weidmuller | 157906 | | |
| 26 | Terminal Bridge Valves | Weidmuller | 157906 | | |
| 27 | Terminal Bridge I/S | Weidmuller | 105446 | | |
| 28 | Terminal Bridge I/S | Weidmuller | 157900 | | |
| 29 | Screen Rail | Weidmuller | 028020 | | |
| 30 | Screen Rail Support | Weidmuller | 029986 | | |
| 31 | Instrument Busbars | Gold Circle | 20 x 5 | | |
| 32 | PE Busbars | Gold Circle | 20 x 5 | | |
| 33 | Instrument Busbar Supports | Allbro | GL-5 | | |
| 34 | Panel Enclosures | Ellen Electrical | Series 6000 | | |
| 35 | Valve Relays | Siemens | 3TX7002-1AB00 | | |
| 36 | Transorbs | Comunica | 1.5KE68CA | | |
| 37 | Trunking | Schneider | 75 mm Depth | | |
| 38 | Label Holders | Weidmuller | 163193 | | |
| 39 | Label Holder covers | Weidmuller | 163194 | | |
| 40 | Wire Pin Lugs | Legrand | Starfix Range | | |
| 41 | Wire Markers | Grafoplast | | Legrand | Memocab range |
| 42 | Panel Light Terminal Block | Weidmuller | 019782 | | |
| 43 | | | | | |


Copyright © Transnet Pipelines, All rights reserved, including rights to amendments

# APPENDIX 2

2.1
Cabinet Supplier: Elen Enclosures
Type: Sarel (Spacial 6000)
Product Certifications: IEC 529, BV, DNV, UL, CSA.

2.2
Sarel spacial 6000
Uprights: part No. 60020
Top/Bottom frame and roof: part No. 67068

2.3
Sarel spacial 6000
Side covers: part No. 61048
Side-by-side fixing kit: part No. 64620

2.4
Sarel spacial 6000
Plinth: part No. 69068
1 piece Gland plate: part No. 63098

2.5
Sarel spacial 6000
Plain door: part No. 67226

2.6
Sarel spacial 6000
Door handle: part No. 63600
6mm Square lock: part No. 63650

2.7
Sarel spacial 6000
Document pocket: part No.64086

2.8
Voltex
Dedicated 16A socket outlet: part No. CT6896 / CT6546/103

2.9
RS Components
Panel light: part No. 230-6574

---------- End of Document ----------


Copyright © Transnet Pipelines, All rights reserved, including rights to amendments

# CABLING, RACKING, TRENCHING & EARTHING INSTALLATION CODES OF PRACTICE

## PL 727

REV. 011


Copyright © Transnet Pipelines, All rights reserved, including rights to amendments

# APPROVAL

| RESPONSIBILITY | DESIGNATION | SIGNATURE | DATE |
|---|---|---|---|
| **COMPILED BY** | Designation :<br><br>Name : | | |
| **APPROVED BY** | Technical Manager | | |
| **ACCEPTED BY** | Technical Manager – M & I SD<br>Technical Manager – M & I ND<br>Technical Manager – M & I HO | | |
| **ACCEPTED BY** | Technical Manager – Elec SD<br>Technical Manager – Elec ND<br>Technical Manager – Elec HO | | |
| | | | |


Copyright © Transnet Pipelines, All rights reserved, including rights to amendments

# DISTRIBUTION

| COPY | ISSUED TO ORGANISATION / DESIGNATION | INDIVIDUALS NAME |
|---|---|---|
| MASTER | Transnet Pipelines Library | |
| 1. | Technical Manager M & I – Head Office | |
| 2. | Technical Manager M & I – Southern Districts | |
| 3. | Technical Manager M & I – Northern Districts | |
| 4. | Technical Manager Electrical – Head Office | |
| 5. | Technical Manager Electrical – Southern Districts | |
| 6. | Technical Manager Electrical – Northern Districts | |
| | | |


Copyright © Transnet Pipelines, All rights reserved, including rights to amendments

# AMENDMENT RECORD

| REV | REV DATE | CHG REQ NO. | CHANGE SUMMARY | PAGES AFFECTED |
|---|---|---|---|---|
| 003 | 30/10/95 | n/a | Document approved for distribution | All |
| 004 | 07/05/99 | n/a | Document revised to incorporate Project Tele (PYP233) Standards | All |
| 005 | 06/10/99 | n/a | Document revised to incorporate Pipeline Crossing/Instr Install/Cable Strap specs | All |
| 006 | 21/09/00 | n/a | Document revised to incorporate Core Identing and Cable Tagging specs | All |
| 007 | 12/04/01 | n/a | Document revised to incorporate additional Core Identing and Cable Tagging specs | All |
| 008 | 01/09/02 | n/a | Document revised to incorporate additional clarification, Field JB wiring and Plant Earthing specifications | All |
| 009 | 01/08/07 | n/a | Document revised to incorporate various changes. Added Transnet Pipelines logo. | All |
| 010 | 06/12/09 | n/a | Reference documentation updated, Fibre Optic Cable Identification Standards added (NMPP). | All |
| 011 | 25/01/10 | n/a | Rev 10 has been rev'ed up to Rev 11 to resolve NMPP Alliance documentation handling issues. | All |
| | | | | |


Copyright © Transnet Pipelines, All rights reserved, including rights to amendments

# TABLE OF CONTENTS

1. INTRODUCTION ..... 7

2. SCOPE ..... 7

2.1 General ..... 7
2.2 Application to Work Activities ..... 7

3. REFERENCE DOCUMENTATION ..... 8

4. SPECIFICATIONS ..... 9

5. ABBREVIATIONS & DEFINITIONS ..... 9

6. TRENCHING RETICULATION CODES OF PRACTICE ..... 11

6.1 General ..... 11
6.2 Trench Specifications ..... 12
6.3 Excavation & Backfill Specifications. ..... 14
6.4 Pipeline Crossings. ..... 17

7. RACKING RETICULATION CODES OF PRACTICE ..... 18

7.1 General ..... 18
7.2 Supports ..... 19
7.3 Dropper Reticulation (Electrical & Instrument) ..... 20
7.4 Ladder Racking Reticulation (Electrical & Instrument) ..... 20

8. CABLING RETICULATION CODES OF PRACTICE ..... 21

8.1 General ..... 21
8.2 Instrumentation Cabling ..... 29
8.3 Electrical Cabling ..... 30
8.4 Additional Requirements for Ex ia/ib Installations ..... 32
8.5 Electrical & Instrument Cable Identification Standards ..... 34
8.6 Cable Core Identification Standards (Core Identing) ..... 38

9. COMMUNICATION INFRASTRUCTURE IDENTIFICATION STANDARDS ..... 41

9.1 Communication Equipment Identification Standards ..... 41
9.2 Communication Cable Identification ..... 42

10. FIBRE OPTIC INFRASTRUCTURE IDENTIFICATION STANDARDS ..... 42

10.1 Splicing Manhole Identification ..... 43
10.2 Cable Ident Identification ..... 43
10.3 Express / Splice Joint Identification ..... 44

11. EARTHING CODES OF PRACTICE ..... 45

11.1 National Standards ..... 45
11.2 Technical Requirements ..... 46
11.3 Switchgear Room Building and Equipment ..... 49
11.4 Control Room Building and Equipment ..... 50
11.5 Manifold Area and Equipment ..... 50


Copyright © Transnet Pipelines, All rights reserved, including rights to amendments

11.6 Earth System Identification Standards .....51
11.7 Testing.....52

APPENDICES.....53

A1. Drawings.....53
A2. FIBRE OPTIC INFRASTRUCTURE IDENTIFICATION STANDARDS – TYPICAL DRAWINGS.....54


Copyright © Transnet Pipelines, All rights reserved, including rights to amendments

# 1. INTRODUCTION

The objective of this Cabling, Racking, Trenching & Earthing Installation Standard is to establish codes of practice that shall be required to be adhered to by both Contractor and Client in the supply and installation of Electrical and Instrument Cabling, Racking, Trenching and Earthing Reticulation on all Transnet Pipelines Sites.

# 2. SCOPE

## 2.1 General

This document defines as a minimum, the general responsibilities for the provision of all Electrical and Instrument Cabling, Racking, Trenching and Earthing Reticulation on all Transnet Pipelines sites, whether by the Client or Contractor, for and on behalf of Transnet Pipelines. In this regard, contractors are required to familiarise themselves with all applicable Standards and Codes of Practice listed herein, and to ensure compliance in the execution of any work in terms of this document. Failure to comply may render the contractor liable for corrections at his own cost.

These Standards and Codes of Practice should be read in conjunction with all other Specifications and drawings as issued for a particular contract. Where discrepancies occur, these must be brought to the attention of Transnet Pipelines in writing before commencement of work. In the event of any conflict between the contents of any documents forming part of a contract (as listed in the Schedule of Contract Documents) and this document, the former shall prevail.

## 2.2 Application to Work Activities

The Standards and Codes of Practice contained herein apply to all installations requiring Electrical and Instrument Cabling, Racking, Trenching and Earthing Reticulation and includes amongst others the following standards:

- Supply of electrical and instrument cable trenches
- Supply, installation of electrical and instrument ladder racking reticulation
- Supply, installation of electrical and instrument dropper reticulation
- Supply, installation and termination of electrical and instrument cabling
- Cable Tagging and Core Identing standards for electrical and instrument cabling
- Supply, installation of instrument and electrical earthing


Copyright © Transnet Pipelines, All rights reserved, including rights to amendments

# 3. REFERENCE DOCUMENTATION

3.1 The requirements of the materials, design, layout, fabrication, assembly, erection, examination, inspection and testing of equipment and facilities on site shall be in accordance with the relevant sections of codes: -

a) ASME/ANSI.B31.3 - Chemical Plant and Petroleum Refinery Piping

b) ASME/ANSI.B31.4 - Liquid Transportation Systems for Hydrocarbons, Liquid Petroleum Gas, Anhydrous Ammonia and Alcohols

c) SANS 10089-2:2002 - The Petroleum Industry Part II: Electrical Code

d) SANS 10142 - Code of Practice for Wiring of Premises

e) SANS 10198:2004 - The Selection, Handling and Installation of Electric Power Cables of rating not exceeding 33 kV

f) API RP 2003 - Protection against ignitions arising out of static, lightning and stray currents

g) SANS 10313 - The Protection of structures against lightning.

h) SANS 10086 - The Installation and Maintenance of Electrical Equipment used in explosive atmospheres. Refer to Section 2 for hazardous area classifications.

i) SANS 97:2001 - Electric Cables: Impregnated Paper-Insulated Metal Sheathed cables for rated voltage 3.3kV:3.3kV to 19kV/37kV.

j) SANS 1507:2007 - Electrical Cables with extruded solid dielectric insulation for fixed installations (300/500V to 1900/3300V)
Part 1: General
Part 3: PVC Distribution Cables
Part 4: XLPE Distribution Cables

k) SANS 1274 - Coatings applied by the Powder Coating Process

l) DIN 41494 - Specification for Panel Mounting Racks

m) DIN 24185 - Specification for Air Filters used in General Ventilation

n) Government, local authorities or other statutory bodies' regulations, laws, requirements or customs which are more stringent than those specified in this project specification.

3.2 The following standard specifications are to be used for reference purposes and need to be noted by Contractors in order to signify familiarity and compliance with the requirements. It is expected of Contractors that they be familiar with the applicable clauses


Copyright © Transnet Pipelines, All rights reserved, including rights to amendments

and that these will be adhered to in the execution of any work in terms of this specification. Contractors will be required to confirm that they are able to meet these requirements.

a) SANS 10108: 2005 The Classification of hazardous locations and the selection of electrical apparatus for use in such locations

b) The Occupational Health & Safety (OHS) Act No. 85 of 1993

c) SANS 60079-1 Flameproof Enclosures for Electrical Apparatus

d) SANS 60079-25 Intrinsically Safe Systems

e) API Manual of Petroleum Measurement Standards Chapters 4 to 12
IP Chapter 10 and Papers 2 and 3

f) SANS 60529 Degrees of protection provided by enclosures (IP Code)

g) Safety Regulations for Contractors

h) Technical Instruction No. 16 - Contractors Work Permit Procedures.

3.3 Where no specific rules, regulations, codes or requirements are contained in this specification nor covered by the above mentioned codes, the contractor shall, in consultation with Transnet Pipelines, adhere to internationally accepted modern design and engineering practices in the Petroleum Industry.

# 4. SPECIFICATIONS

4.1 The following standard specifications are to be read in conjunction with this document and require separate statements of compliance, which should be included in the tender documents.

| | |
|---|---|
| Specification for Equipment Cabinets to house Electronic Equipment | PL711 |
| Specification for Low Voltage Switchgear and Distribution Boards | PL631 |
| Specification for Medium Voltage Switchgear | PL632 |
| Safety Regulations for Contractors | |

# 5. ABBREVIATIONS & DEFINITIONS

5.1 For the purpose of understanding these Standards, the following abbreviations apply.

| | |
|---|---|
| ANSI | American National Standards Institute |
| C & I | Control and Instrumentation |
| IEC | International Electrotechnical Commission |
| ISA | Instrument Society of America |
| SABS | South African Bureau of Standards |

5.2 The following Definitions are consistent with the Transnet E5 Agreement and General Conditions of Contract and apply to this specification in its entirety.


Copyright © Transnet Pipelines, All rights reserved, including rights to amendments

CHIEF EXECUTIVE (Transnet Pipelines) means the officer appointed as Chief Executive (Transnet Pipelines) of Transnet Limited or any person lawfully acting in that capacity.

ENGINEER means any officer in the office of the Chief Executive (Transnet Pipelines) deputed by the Chief Executive (Transnet Pipelines) to supervise and take charge of the contract.

PLANT means any machine, excluding a tool, and any vehicle, excluding a passenger vehicle, used on site for the carrying out of the Works.

EQUIPMENT means any device not forming a permanent part of the Works, used on site for the carrying out of the Works, and also any temporary building which is required for the carrying out of the Works and which is erected on site.

TOOL means any instrument, powered or otherwise, which is accepted as a hand tool by the industry concerned and which is normally used in a manual operation by an individual labourer, artisan or workman.

MATERIAL means any constructional substance or ingredient which shall form part of the permanent Works and the substances in excavations and earthworks.

DRAWINGS means the drawings referred to in any specifications, schedule of quantities and prices and any alterations of such drawings made or approved in writing by the Engineer and such other drawings as may from time to time be furnished or approved in writing by the Engineer.

SITE means the land and any other place on, under, over, in or through which the Works are to be executed or carried out and any other land or place made available by Transnet in connection with the Works.

WORKS means the works to be executed in accordance with the Contract.


Copyright © Transnet Pipelines, All rights reserved, including rights to amendments

# 6. TRENCHING RETICULATION CODES OF PRACTICE

This specification details standards and codes of practice to be adhered to in the supply of Electrical and Instrument Cable Trenching Reticulation at all Transnet Pipelines Sites.

The requirements of the materials, design, layout, fabrication, assembly and erection shall, where relevant, be in accordance with the following approved Installation Typicals forming part of this Specification: -

Cable Marker Specification 727/001/cblmarker

## 6.1 General

6.1.1 The Contractor must familiarise himself with the requirements for conducting excavations in hazardous areas.

6.1.2 The Contractor will be required to submit proposed Trench Route Reticulation Diagrams to Transnet Pipelines for approval, prior to commencement of work. In this regard, contractors will be required to have studied all relevant Site Layout drawings and familiarised themselves as to the nature and location of all existing services, both buried and visible. Contractors are to note that approval of trench routing by the client in no way absolves the contractor of his responsibilities regarding damage to and rectification of existing services. **All damages to existing services, inclusive of cabling and piping shall be required to be rectified at the Contractor's cost.**

6.1.3 The Contractor must advise the client of any uncharted services encountered during excavations.

6.1.4 During trenching operations the Contractor must ensure that all precautions are taken to prevent damage to underground services.

6.1.5 The Contractor shall advise the client immediately if any damage is caused to underground services; inclusive of cabling, water mains etc.

6.1.6 Approval must be given by the client for the removal of obstructions.

6.1.7 Excavations across oil pipelines shall not be done without the authorised personnel present on site. The client must be advised 14 days in advance when such excavations will take place.

6.1.8 Cable crossings of oil pipelines shall only be at right angles.

6.1.9 Contractors are to note that where cable sleeves are not installed, all cable trenches are required to remain open until the end of the Commissioning Phase of the project, unless instructed otherwise. Provision for the possible erosion of the backfill / collapsing of trenches shall be made by Tenderer's in their Offers. Contractors are to note that where requested by Transnet Pipelines Operational Staff, platforms/bridges shall be required to be provided by the Contractor for the crossing of open trenches and provision shall be made in the Tenderer's Offer accordingly. Trenches across road, access ways or foot-paths shall not be left open for a period longer than eight hours.

6.1.10 **Power driven mechanical excavators shall not be used for excavations, without prior permission from the client.**


Copyright © Transnet Pipelines, All rights reserved, including rights to amendments

6.1.11 Trenches shall be as straight as possible with the bottom of the trench firm and smooth without sharp dips or rises, which may cause tensile forces in the cable during backfilling.

6.1.12 Trenches shall have no sharp objects, which may cause damage to the cable during laying or backfilling.

6.1.13 The width of the trench at any bend or place where cable slack is required shall be such as to allow the bending radius of the cable not to be less than is specified in SABS 97 and SABS 1339 for that particular cable.

6.1.14 The Contractor shall remove any accumulated water or liquid from the trenches and dispose of it without creating a nuisance or hazard.

6.1.15 The client reserves the right to alter any cable route or portion thereof prior to the laying of cables.

6.1.16 The Contractor shall supply and install cable markers at all locations that mark either a change in direction of a cable trench, the location of a cable joint or the location of a draw box. Cable Markers shall comply fully with all provisions detailed in Drawing 727/001/Cblmrk (latest revision), attached to this Specification.

## 6.2 Trench Specifications

Separate Trenches shall be supplied to cater for the following cable types:

### 6.2.1 ELECTRICAL HV/MV TRENCHES

| | |
|---|---|
| Trench Dimensions | : 1000 mm deep by 500 mm wide (two cables), add 300mm width for additional cables |
| River Sand Bedding | : PVC Piping – 75 mm above pipe, 50mm under pipe<br>: Direct Burial – 100 mm |
| Identification | : PVC or Concrete Interlocking Tiles at a depth of 350mm |
| Cable Markers | : Concrete with engraved anodised aluminium ID plates<br>Cable Marker Colour – Brilliant Green |
| Cabling | : Medium and High Voltage Power Cabling > 400 VAC |
| Separation | : 500 mm (LV cabling), 1000mm (Instrument cabling) |

### 6.2.2 ELECTRICAL LV TRENCHES

| | |
|---|---|
| Trench Dimensions | : 750 mm deep by 300 mm wide |
| River Sand Bedding | : PVC Piping – 75 mm above pipe, 50mm under pipe<br>: Direct Burial – 100 mm |
| Identification | : Polythene Marker Tape (150mm wide, yellow and marked with the words “Electric Cable/Elektriese Kabel”) at a depth of 350mm |
| Cable Markers | : Concrete with engraved anodised aluminium ID plates.<br>Cable Marker Colour – Black |
| Cabling | : Low Voltage Power Cabling 400 VAC/230 VAC<br>(e.g. Actuators, Aux Motors, DB circuits) |


Copyright © Transnet Pipelines, All rights reserved, including rights to amendments

| | |
|---|---|
| | : Control Cabling<br>(e.g. MV Breaker Inter-tripping cables, Actuator control signals, Aux Motor local stop/start panels etc.) |
| Separation | : 500 mm (HV/MV cabling), 1000mm (Instrument cabling) |

### 6.2.3 INSTRUMENT TRENCHES

| | |
|---|---|
| Trench Dimensions | : 500 mm deep by 300 mm wide |
| River Sand Bedding | : PVC Piping – 75 mm above pipe, 50mm under pipe<br>: Direct Burial – 100 mm |
| Identification | : PVC Tiles / Polythene Marker Tape (150mm wide, yellow and marked with the words "Electric Cable/Elektriese Kabel") at a depth of 350mm |
| Cable Markers | : Concrete with engraved anodised aluminium ID plates<br>Cable Marker Colour – Light Blue |
| Cabling | : Instrument Multi-core & Single Pair Cabling (IS and non IS) |
| Separation | : 1000mm (HV/MV/LV Electrical cabling) |

### 6.2.4 CABLE SLEEVING

6.2.4.1 Electrical LV and Instrument Cables shall where possible, be run in buried Cable Sleeves on the following routes (to facilitate pulling of new cables in the future):

- From the Switchgear Room to the manifold
- From the Control Room to the manifold
- From the Switchgear Room to the Control Room (where the buildings are located apart from each other)

6.2.4.2 Electrical LV and Instrument Cables may dependant on distances, be direct buried or run in buried Cable Sleeves on the following routes:

- From the Switchgear Room to Station Block Valve Chambers, Guard Huts
- From the Control Room to Station Block Valve Chambers, Guard Huts

6.2.4.3 All areas subject to vehicle traffic, rail crossings and paved areas shall be sleeved.

6.2.4.4 Sleeves shall be designed so as to ensure 25 % spare capacity.

6.2.4.5 Sleeve Specifications

| | |
|---|---|
| Material | : PVC or PHD Polyethylene |
| Dimensions | : 100 mm OD min |
| Standards | : DIN EN50086-2, BS EN50086-2-4:1994 |

### 6.2.5 DRAW BOXES

Where cable sleeves are utilised and to facilitate the hauling of cables, brick draw boxes shall be provided at all trench junctions, complete with concrete slab, as detailed below:


Copyright © Transnet Pipelines, All rights reserved, including rights to amendments

| | |
|---|---|
| Draw Box Dimensions (min) | : Internal 450 mm square, 3 courses of stock brick deep |
| Base & Top | : Concrete 50mm thick |

## 6.3 Excavation & Backfill Specifications.

6.3.1 Areas subject to Vehicle Traffic utilising sleeved access (PVC piping).

The bottom of the trench shall be levelled, compacted and a 50mm depth of bedding material placed and compacted. The bedding material shall have a PI of less than 8 and a compatibility factor within the range 0 to 0,4. The bedding material shall have a grading as follows;

a) No particles retained on the 19mm sieve.
b) No more than 55 by mass shall be retained on the 13,2mm sieve.
c) More than 40% by mass shall be retained on the 0,6mm sieve.

Following the laying of the pipe a further 75mm of suitable bedding material shall then be placed around and above the pipes and compacted.

Backfilling shall then proceed in layers of not greater than 150mm and compacted to 90% Mod AASHTO density up to a level of finished road surface minus 450mm.

From –450mm to –300mm the backfill shall consist of selected quality material and compacted to 93% Mod AASHTO density.

From –300mm to –150mm the backfill shall consist of a stabilised sub base compacted to 95% Mod AASHTO density, stabilised with 2 pockets of OP cement per $m^3$.

In the case of concrete surface roads, from –150mm to –75mm, backfill shall consist of crushed stone compacted to 98% Mod AASHTO density. The final 75mm shall consist of in situ concrete of 30 MPa, vibrated and floated at the finished road surface. No vehicle traffic shall be permitted to cross the new concrete for a period of 7 days.

In the case of tarmac surface roads, from –150mm to –55mm, backfill shall consist of crushed stone compacted to 98% Mod AASHTO density. The final 50mm shall consist of TPA medium cold mix tarmac laid on a CAT 60 prime coat.

A DCP test result of not more than 5mm per blow, when averaged out of 150mm will be considered acceptable. This result shall be obtained over the top two layers of 150mm.

A CBR reading of 50 or greater shall be required to be obtained with the above DCP results.

All backfilling shall be completed using a mechanical trench rammer. A water cart shall be available on site to wet the backfill materials. Scales, sieves and DCP equipment shall be made available on site for use by Transnet Pipelines staff in the conducting of any of the above-mentioned tests.

6.3.2 Rail Crossings utilising sleeved access (PVC piping).

The excavation, backfilling and pipe laying across rail tracks shall be in accordance with Transnet specification CSE-516/1 (January 1985).


Copyright © Transnet Pipelines, All rights reserved, including rights to amendments

The bottom of the trench shall be levelled, compacted and a 50mm depth of bedding material placed and compacted. The bedding material will have a PI of less than 8 and a compatibility factor within the range 0 to 0,4. The bedding material shall have a grading as follows;

a) No particles retained on the 19mm sieve.
b) No more than 55 by mass shall be retained on the 13,2mm sieve.
c) More than 40% by mass shall be retained on the 0,6mm sieve.

Following the laying of the pipe a further 75mm of suitable bedding material shall be placed around and above the pipes and compacted.

Backfilling shall then proceed in layers of not greater than 150mm and compacted to 95% Mod AASHTO density up to a level of finished formation level. The backfill shall consist of excavated material mixed with OP cement in the ration of 2 pockets of cement per 1 cubic meter of backfill.

The DCP test result of not more than 5mm per blow, when averaged out of 150mm will be considered to be acceptable. This result shall be obtained over the top two layers of 150mm.

A CBR reading of 50 or greater shall be required to be obtained with the above DCP results.

All backfilling shall be completed using a mechanical trench rammer. A water cart shall be available on site to wet the backfill materials. Scales, sieves and DCP equipment shall be made available on site for use by Transnet Pipelines staff in the conducting of any of the above-mentioned tests.

6.3.3 Paved Areas not subject to Vehicle Traffic utilising sleeved access (PVC piping).

The bottom of the trench shall be levelled, compacted and a 50mm depth of bedding material placed and compacted. The bedding material shall have a PI of less than 8 and a compatibility factor within the range 0 to 0,4. The bedding material shall have a grading as follows;

a) No particles retained on the 19mm sieve.
b) No more than 55 by mass shall be retained on the 13,2mm sieve.
c) More than 40% by mass shall be retained on the 0,6mm sieve.

Following the laying of the pipe a further 75mm of suitable bedding material shall be placed around and above the pipes and compacted.

Backfilling shall then proceed in layers of not greater than 150mm and compacted to 90% Mod AASHTO density up to a level of finished road surface minus 300mm.

From –300mm to –150mm, the backfill shall consist of selected excavated material compacted to 93% Mod AASHTO density while the last 150mm shall be compacted to 95% Mod AASHTO density.

A DCP test shall be required to give an average of not more than 11mm per blow averaged over the last 150mm of backfill, thus approximating a CBR value of over 20, which is considered acceptable for backfilling in trenches subject to pedestrian traffic.


Copyright © Transnet Pipelines, All rights reserved, including rights to amendments

All backfilling shall be completed using a mechanical trench rammer. A water cart shall be available on site to wet the backfill materials. Scales, sieves and DCP equipment shall be made available on site for use by Transnet Pipelines staff in the conducting of any of the above-mentioned tests.

6.3.4 Common Areas not subject to Vehicle Traffic utilising sleeved access (PVC piping).

The bottom of the trench shall be levelled, compacted and a 50mm depth of bedding material placed and compacted. The bedding material would have a PI of less than 8 and a compatibility factor within the range 0 to 0,4. The bedding material shall have a grading as follows;

a) No particles retained on the 19mm sieve.
b) No more than 55 by mass shall be retained on the 13,2mm sieve.
c) More than 40% by mass shall be retained on the 0,6mm sieve.

Following the laying of the pipe a further 75mm of suitable bedding material shall be placed around and above the pipes and compacted.

Backfilling shall then proceed in layers of not greater than 300mm and compacted to 90% Mod AASHTO density up to a level of finished road surface minus 300mm.

From –300mm to finished ground level; backfill shall consist of selected excavated material and compacted to 93% Mod AASHTO density.

A DCP test shall be required to give an average of not more than 15mm per blow averaged over the last 150mm of backfill, thus approximating to a CBR value of over 15 which is considered acceptable for backfilling in trenches subject to pedestrian traffic

All backfilling shall be completed using a mechanical trench rammer. A water cart shall be available on site to wet the backfill materials. Scales, sieves and DCP equipment shall be made available on site for use by Transnet Pipelines staff in the conducting of any of the above-mentioned tests.

6.3.5 Common Areas not subject to Vehicle Traffic utilising direct burial.

The bottom of the trench shall be levelled, compacted and a 50mm depth of bedding material placed and compacted. The bedding material would have a PI of less than 12. The bedding material shall have a grading as follows:

a) No particles retained on the 10mm sieve.

Following the laying of the cable a further 50mm of suitable bedding material shall be placed around and above the cable.

Backfilling shall then proceed in layers of not greater than 300mm and compacted to 90% Mod AASHTO density up to a level of finished road surface minus 300mm.

From –300mm to finished ground level; backfill shall consist of selected excavated material and compacted to 93% Mod AASHTO density.

A DCP test shall be required to give an average of not more than 15mm per blow averaged over the last 150mm of backfill, thus approximating to a CBR value of over 15, which is considered acceptable for backfilling in trenches subject to pedestrian traffic


Copyright © Transnet Pipelines, All rights reserved, including rights to amendments

All backfilling shall be completed using a mechanical trench rammer. A water cart shall be available on site to wet the backfill materials. Scales, sieves and DCP equipment shall be made available on site for use by Transnet Pipelines staff in the conducting of any of the above-mentioned tests.

## 6.4 Pipeline Crossings.

6.4.1 All work performed outside of Transnet Pipelines Pump Station perimeters and within Transnet Pipelines pipeline servitudes shall conform to all requirements as laid down by the Transnet Pipelines Pipeline Crossings Manual (as amended), inclusive of the following:

6.4.2 Excavations across oil pipelines shall not be done without the authorised Transnet Pipelines personnel present on site. The client must be advised 14 days in advance when such excavations will take place.

6.4.3 All Cable Trenches (inclusive of both Instrument and Electrical Trenches) are to be trenched to a depth of 1.0 metre.

6.4.4 Crossing of pipelines shall be kept to an absolute minimum and shall require prior approval by Transnet Pipelines. Crossings shall be at right angles to the pipeline. All cabling shall be taken underneath the pipeline at a depth of 500 mm below the pipe surface. All damage to existing services, inclusive of piping and wrapping, shall be required to be rectified at the cost of the Contractor.

6.4.5 Power driven mechanical excavators shall not be used for excavations, without prior permission from Transnet Pipelines. Trenching in or near to pipeline servitudes shall be performed by hand, unless prior permission is otherwise granted by Transnet Pipelines.

6.4.6 When trenching in Transnet Pipelines servitudes and prior to commencement of trenching, actual position of the pipeline within the servitude is required to be located and clearly marked. The use of existing pipeline markers will not be considered as sufficient indication of the route of a pipeline.

6.4.7 All pipeline crossings will be performed in accordance with the Transnet Pipelines Pipeline Crossings Policy, Excavations Policy and Crossing Instructions (Instructions 1 through 5).


Copyright © Transnet Pipelines, All rights reserved, including rights to amendments

# 7. RACKING RETICULATION CODES OF PRACTICE

This specification details standards and codes of practice to be adhered to in the supply of Electrical and Instrument Cable Racking Reticulation at all Transnet Pipelines Sites.

The requirements of the materials, design, layout, fabrication, assembly and erection shall, where relevant, be in accordance with the following approved Installation Typicals forming part of this Specification: -

| | |
|---|---|
| Typical for Instrument Stands - double | 727/002/Instand |
| Typical for Instrument Stands - single | 727/003/Instand |
| Typical for Angle Iron Droppers | 727/007/Rack_Droppers |
| Typical for Racking Layouts incl. over Bund Walls | 727/009/Rack_Typical |
| Typical for Junction Box stands | 727/010/Junction Box Stand |

## 7.1 General

7.1.1 The Contractor shall allow for the supply and installation of all cable racking and droppers where specified, including all supporting steelwork, accessories, clamps, fixing materials, deviations, bends, angles, tees, reducers and all other components required, to make cable racking and droppers complete and ready for the laying of cables.

7.1.2 All racking (inclusive of ladder racks and droppers) will be cut, fabricated, formed and then hot-dip galvanised (mild steel) prior to installation. Material of manufacture shall be mild steel unless specified otherwise in the Scope of Works attached to an Order.

7.1.3 All clamps, fixing materials and accessories, including nuts, bolts, washers etc. shall be manufactured from 316 Stainless Steel or chrome plated, to prevent corrosion. Fixing screws shall comprise of Pan head screws and nuts.

7.1.4 All welding must comply with SABS 044 Code of Practice for Welding and BS 1856 General Requirements for the Welding of mild steel. Tack or point welding of joints/seams is not considered acceptable practise.

7.1.5 In cases where galvanised cable racks or other steelwork are cut or drilled, all such cuts or holes shall be treated with an approved cold galvanising paint within 12 hours after cutting or drilling.

7.1.6 Holes larger than 7mm in diameter shall not be drilled in the structural steelwork without prior consent of the Consulting Engineer.

7.1.7 Separation of a minimum of 1000mm will be maintained between all instrumentation cable racking and parallel running electrical cable racking reticulation. Instrument cable racking having to cross electrical cables will do so at 90 degrees to minimise noise and interference.

7.1.8 All cable racking will be installed in a neat and straight manner and will be adequately supported with brackets attached to joists, walls or floors by the Installation Contractor following agreement with the Engineer. Horizontal racking runs will be level, vertical racking runs will be upright (90 deg), and shall be determined by use of spirit level. All ends will be free of jagged edges and will be neatly rounded.

7.1.9 All cable racking reticulation shall be **continuous and mounted in the vertical plane** and shall be positioned so as to avoid obstruction to walkways and access routes. All cable racking shall be installed in such a way so as to provide no obstruction to mechanical fitting


Copyright © Transnet Pipelines, All rights reserved, including rights to amendments

or maintenance procedures (associated with vessels, flanges, valves, actuators etc). Where access to walkways and equipment has been obstructed, it shall be the Contractor's responsibility to provide the necessary access via catwalks or stairs. Pricing for the aforesaid shall be deemed to have been included in the Tenderer's Offer.

7.1.10 Bonding straps, comprising of 10mm insulated (green/yellow) cable and lugged at both ends, shall be installed across all fish plates joining ladder racks together, in compliance with SABS 0142. All cable racks and supports (including angle iron where used in place of cable racks) shall be earthed to the station earth at two designated earth test points within the manifold. Note that angle iron droppers may be excluded from this provision.

## 7.2 Supports

7.2.1 Adequately sized Concrete Plinths shall be required to be provided by the contractor and incorporated into Tenderer's Offers under the following circumstances:

- All Cable Racking and Droppers supported at any height off of floor level, outside of concreted bund areas.
- All Cable Racking and Droppers supported at a height of greater than 1 000 mm off of floor level, within concreted bund areas.
- All Field Junction Box supports, whether within or outside of concreted bund areas.
- All Instrument Stands, installed outside of concreted bund areas

Plinths shall be sized and racking supports provided to ensure no lateral movement ie. no noticeable deflection of the rack/dropper between support points when fully loaded. Allowance shall be made for additional loading where cable racks are not fully occupied. The Contractor will be required to submit proposed Plinth and Support Bracket Diagrams to Transnet Pipelines for approval, prior to commencement of work. Provision for the supply and installation of concrete plinths and adequate supports shall be included in all Tenderer's Offers. The use of gussets of height less than 300mm shall be permitted to provide lateral support for Racking stands. Note however that the use of stays to provide support shall not be permitted. Racking stands shall be mounted vertically and grouting used to level with the bund floor, where required. **All support brackets shall be fastened to the concrete plinths by means of chemical anchors.**

7.2.2 Cable Racking and Droppers supported at a height of less than 1 000 mm off of floor level within concreted bund areas, and Instrument support brackets installed within concreted bund areas shall be fastened to the bund floor via means of adequately sized support brackets to ensure no lateral movement ie. no noticeable deflection of the rack/dropper between support points when fully loaded. Allowance shall be made for additional loading where cable racks are not fully occupied. The Contractor will be required to submit proposed Racking Support Diagrams to Transnet Pipelines for approval, prior to commencement of work. Provision for the supply and installation of adequate supports shall be included in all Tenderer's Offers. The use of gussets of height less than 300mm shall be permitted to provide lateral support for Racking stands. Note however that the use of stays to provide support shall not be permitted. Racking stands shall be mounted vertically and grouting used to level with the bund floor, where required. **Support brackets shall be fastened to the bund floor by means of chemical anchors.**

7.2.3 All supports, inclusive of racking reticulation and field junction box supports shall be installed in such a way so as to be both easily accessible and yet unobtrusive.


Copyright © Transnet Pipelines, All rights reserved, including rights to amendments

## 7.3 Dropper Reticulation (Electrical & Instrument)

7.3.1 Angle Iron Droppers shall be supplied and installed as cable supports to all instrumentation and valves, for all unsupported cable runs exceeding 1 000 mm in length.

7.3.2 Fabricated angle iron runs, with associated brackets and supports, will be supplied and installed for all individual instruments/electrical equipment, by the Installation Contractor, as required.

7.3.3 All bends and tees will be formed with a minimum inner radius capable of accommodating the minimum bend radius of the associated cable specifications. All bends shall be formed/swept – angled bends are not permissible.

7.3.4 All individual Instrument/Electrical Cable Droppers will be manufactured from angle iron with the following dimensions:

25x25x3mm or 40x40x5mm as required.

7.3.5 Angle Iron Droppers shall be sized to support an appropriate number of cables. In this regard, no more than three cables shall be supported on any one dropper.

## 7.4 Ladder Racking Reticulation (Electrical & Instrument)

7.4.1 **Pre-fabricated, heavy duty, hot dip galvanised ladder** racking reticulation, equivalent to the “O Line” support system, with all associated brackets and supports, will be supplied and installed for all instrument/electrical cabling requirements, by the Installation Contractor, as required.

7.4.2 In this regard O Line OL76 Type (Medium Duty) or equivalent racking may be utilized under the following circumstances:

- Racking to be installed at a height of less than 1 m from bund floor level
- Racking supports be spaced at a maximum width of 1.5 m apart, to lend additional support.

All racking installed at heights of greater than 1m from bund floor level must comply with O Line PS75 Power Span (or similar). The above concession in no way alleviates the Contractor of the responsibility to ensure that racking installed is not subject to lateral movement or sagging when fully loaded. In such cases, the Contractor will be required to rectify the fault at no additional cost to Transnet Pipelines.

7.4.3 All ladder racking shall be supported by adequate brackets and supports, a maximum width of 3m apart. In addition, all racks shall be supported at every change of direction of cable rack route. The cross stays of the ladder racking shall be installed with a maximum width of 500mm apart. All bends and tees will be formed with a minimum inner radius capable of accommodating the minimum bend radius of the associated cable specifications.

7.4.4 All bends and tees shall be formed/swept, with a minimum inner radius capable of accommodating the minimum bend radius of the associated cable specifications. Reducers shall be used when converting from one racking size to another, including right angle joints.


Copyright © Transnet Pipelines, All rights reserved, including rights to amendments

# 8. CABLING RETICULATION CODES OF PRACTICE

This specification details standards and codes of practice to be adhered to in the supply, installation, termination, cable tagging and core identing of Electrical and Instrument Cable and Wiring Reticulation at all Transnet Pipelines Sites. The Installation Contractor will supply, install and terminate all instrumentation and electrical cabling to be run from the central Control System, via field marshalling cabinets up to and including connection to field instrumentation as well as from the Switchgear/PLC Room up to including electrical equipment, as specified in the Scope of Works attached to an Order.

The requirements of the materials, design, layout, fabrication, assembly and erection shall, where relevant, be in accordance with the following approved Installation Typicals forming part of this Specification: -

| | |
|---|---|
| Typical Instrument Loop Drawing | 727/005/InstrLoop |
| Typical Valve Loop Drawing | 727/006/VlvLoop |

## 8.1 General

### 8.1.1 Cable Supply

8.1.1.1 All Electrical and Instrument cabling shall be in compliance with the specifications as stated in the Scope of Work attached to an Order. Contractors are to note that the provisions of SANS 10198 (“The Selection, Handling and Installation of Electric Power Cables of rating not exceeding 33 kV”) must be strictly adhered to in regard to the supply, installation and termination of all electrical and instrument cabling.

8.1.1.2 Sizing of multiple twisted pair cabling will accommodate the grouping of instrumentation terminations in each individual marshalling cabinet.

8.1.1.3 All Control and Instrument multi-core cables will include 25% spare capacity, unless otherwise specified in the Scope of Work attached to an Order.

8.1.1.4 The Installation Contractor shall be responsible for undertaking whatever preliminary engineering is required to verify cable core and quantity requirements. Contractors are to note that Transnet Pipelines will accept no liability for the accuracy of quantities specified in Contract Bills of Quantity. All excess material and off cuts not installed shall remain the property of the Contractor on completion of the contract i.e. payment shall be based on the quantity of material installed.

### 8.1.2 Cable Installation

8.1.2.1 Strapping

All instrument and electrical cables shall be installed on cable racking (whether in the vertical or horizontal orientation) and held to the racking at maximum intervals of 2 metres using approved cable ties/straps. Strapping intervals shall be determined by taking into account the mass of the cabling, length of the run and number of cables to be strapped together. Note that the maximum interval permitted between strapping is 2 metres. No more than 3 cables will be permitted per individual Cable Tie/Strap. All cable ties/straps shall comply with the following specification, unless otherwise specified in the Scope of Work attached to an Order:


Copyright © Transnet Pipelines, All rights reserved, including rights to amendments

- 316 Stainless Steel Bandit or Runlock (4 mm, 6 mm, 8mm width)

All Cabling shall be fastened securely and tightly to the Cable Racking Reticulation using the specified Cable Ties/Straps, in order to prevent cable sagging from occurring. In this regard and where necessary, Cable Droppers shall be drilled or slotted in order to ensure secure contact between Cable Tie and Cables installed. **No packing shall be allowed.**

8.1.2.2 Joints

No cable joints shall be permitted without the prior permission of Transnet Pipelines.

8.1.2.3 Cable Laying

Cable drums shall be supported on jacks and shall be rolled in the indicated direction to prevent twisting, tension or mechanical damage to the cable. Cable shall be drawn into position using sufficient rollers and labour to avoid damage by excessive bending and dragging. Particular care must be exercised when drawing cables through pipes and ducts to avoid abrasion, elongation and distortion of any kind.

Where cables come out of a trench or pass through a floor, they shall be protected by suitable mechanical protection, extending from 50mm to 1000mm above ground/floor level.

Where cables are cut and not immediately made off, the ends are to adequately sealed to the satisfaction of the Engineer and without delay, to prevent the ingress of moisture.

8.1.2.4 Cable Duct Preparation

All cable ducts, including those entering bundwall areas, buildings and panels shall be sealed against the ingress of water, fire and vermin (rodents). The use of Intumastic Sealant (or similar) is recommended for fire proofing of all cable duct entries.

## 8.1.3 Cable Termination

8.1.3.1 Glanding

All instrument and electrical cables will be glanded at both ends using the appropriate sized gland and will include associated adaptors, washers, ferrules, bands, etc. Provision for all glands, adaptors, washers, ferrules, bands etc. shall be included in the Tenderer's offers. All cable glands shall comply with the following specification, unless otherwise specified in the Scope of Work attached to an Order:

Dekabon Armoured and unarmoured Cabling (Instrumentation)
Increased Safety Ex"e" rated compression gland (CCG Posi Grip EExe or similar), IP68 rated, in accordance with SABS 1031. All adaptor/reducers and blanking plugs are to be FLP.

PVC SWA Cabling (Instrument Multicore, Ex"e" rated motors)
Increased Safety Ex"e" rated non-compression gland, IP68 rated, complete with SWA protection (CCG Ex Armortex EExde IIC or similar), in accordance with SABS 1031. All adaptor/reducers and blanking plugs are to be FLP.

PVC SWA Cabling (Ex"d" rated motors, actuators)
Flameproof Ex"d" rated non-compression gland, IP68 rated, complete with SWA protection (CCG Armortex Exde I/IIC or similar), in accordance with SABS 808. All adaptor/reducers and blanking plugs are to be FLP.


Copyright © Transnet Pipelines, All rights reserved, including rights to amendments

PVC SWA Cabling (Electrical and PLC Panels located within buildings rated as Safe Areas in terms of Hazardous Area Classifications SANS 10108)
Non-Flameproof rated, non-compression gland, IP68 rated, complete with UV resistant (black) shroud where required (CCG BW with shroud for SWA cables, CCG A2 Compression with shroud for non-SWA cables, or similar).

All glands will be waterproof and in the case of Hazardous Areas, correctly rated in terms of the Explosion Proof Classification of the equipment housings to which they are installed.

It shall be the responsibility of the Installation Contractor to ensure that all excess gland entries into both panels and equipment (e.g. valve actuators, instruments) are plugged by means of suitably rated gland plugs. In hazardous areas, this will require the use of EEx d/e rated plugs. The use of "push-out" blanking inserts to plug cable entries shall not be permitted.

8.1.3.2 Termination

All cables will be terminated at field instrumentation, electrical equipment, field junction boxes, switchgear panels and control room marshalling cabinets according to manufacturers specifications, instrument hook-up diagrams and control system specifications as provided/approved by Transnet Pipelines.

**Instrument Dekabon Cabling**

- Outer Dekabon armouring shall be stripped back to the entry point into the associated termination/junction box. Protrusion of cable sheath/armouring into the termination/junction box (through the compression gland) shall be a minimum of 15mm and a maximum of 50mm.

- Cable pair inner aluminium foil shall be stripped back to the point at which the individual cores leave the PVC Trunking to be terminated onto the respective terminal rails. Ends of the inner foil shall be neatly taped/heat shrunk so as to prevent unravelling.

- Individual cable ends shall be sealed with the use of heat shrink tubing applied over the cable sheath/armouring at the point of entry into the termination/junction box/panel, in order to protect the cable and prevent the ingress of moisture.

- Both cable overall (drain wire) and individual screens shall be insulated with the use of appropriately sized green coloured sleeving, to prevent inadvertent contact with metallic surfaces.

- All individual cable cores (including spares) will be left long enough to accommodate 200mm slack, i.e. taking into account the routing via the trunking.

- Excess lengths of individual cable cores will be neatly folded and tied within the trunking provided. All spare cores shall be terminated into terminals so provided.

- Termination of individual cable cores in the termination strips will be such that all Control System related cabling will be terminated to one side of termination strips, whilst all field instrumentation/equipment cabling will be connected to the other side of termination strips.


Copyright © Transnet Pipelines, All rights reserved, including rights to amendments

In the case of Field Junction Boxes with dual terminal strips, multi-core cabling will be glanded in the centre of the gland plate and terminated into terminal rails provided, running from the centre PVC Trunking outwards. Individual Instrument cables will then be terminated into the terminal rails provided, running from the outermost PVC Trunking inwards. In the case of dual terminal rails, discrete signals will be terminated on the LHS terminal rail, and analogue signals on the RHS terminal rail. Where PLC and Metering signals are terminated into the same Field Junction Box, PLC signals will be terminated on the LHS terminal rail, and Metering signals on the RHS terminal rail.

In the case of Field Junction Boxes with single terminal strips, multi-core cabling will be glanded on the right side of the gland plate and terminated into terminal rails provided, running from the right hand side of the panel inwards. Individual Instrument cables will then be terminated into the terminal rails provided, running from the left hand side of the panel inwards.

- All cables connected to individual instruments/equipment will be provided with a single loop of minimum diameter of 150mm. All loops will be neatly strapped.

- All cores (including spares) will be terminated into allocated termination strips/rails in the respective Instrumentation, Termination and Field Junction Boxes

**Instrument PVC SWA Multi-core Cabling**

- Cable SWA armouring shall be stripped back to the entry point into the associated marshalling cabinet/junction box and shall be glanded in such a manner so as to ensure electrical continuity with the gland. When terminated in hazardous areas, cable armouring shall be bonded to the panel equi-potential bonding system via means of earthing rings provided as an integral part of the gland. Contact between the gland and the gland plate shall not be considered as sufficient for bonding purposes.

- Protrusion of cable inner PVC sheaths into the marshalling cabinet will be a minimum of 25mm and a maximum of 50mm.

- Cable inner aluminium foil shall be stripped back to the point at which the individual cores leave the PVC Trunking to be terminated onto the respective terminal rails. Ends of the inner foil shall be neatly taped/heat shrunk so as to prevent unravelling.

- Cable ends shall be sealed with the use of heat shrink tubing applied over the cable inner sheath at the point of entry into the termination/junction box/panel, in order to protect the cable and prevent the ingress of moisture.

- Both cable overall and individual screens shall be insulated with the use of appropriately sized green coloured sleeving, to prevent inadvertent contact.

- All individual cable cores (including spares) will be left long enough to accommodate 200mm slack, i.e. taking into account the routing via the trunking.


Copyright © Transnet Pipelines, All rights reserved, including rights to amendments

- Excess lengths of individual cable cores will be neatly folded and tied within the trunking provided. All spare cores shall be terminated into terminals so provided.

- Termination of individual cable cores in the termination strips will be such that all Control System related cabling will be terminated to one side of termination strips, whilst all field instrumentation/equipment cabling will be connected to the other side of termination strips.

  In the case of Field Junction Boxes with dual terminal strips, multi-core cabling will be glanded in the centre of the gland plate and terminated into terminal rails provided, running from the centre PVC Trunking outwards. Individual Instrument cables will then be terminated into the terminal rails provided, running from the outermost PVC Trunking inwards. In the case of dual terminal rails, discrete signals will be terminated on the LHS terminal rail, and analogue signals on the RHS terminal rail. Where PLC and Metering signals are terminated into the same Field Junction Box, PLC signals will be terminated on the LHS terminal rail, and Metering signals on the RHS terminal rail.

  In the case of Field Junction Boxes with single terminal strips, multi-core cabling will be glanded on the right side of the gland plate and terminated into terminal rails provided, running from the right hand side of the panel inwards. Individual Instrument cables will then be terminated into the terminal rails provided, running from the left hand side of the panel inwards.

- All cores (including spares) will be terminated into allocated termination strips/rails in the respective Instrumentation, Termination and Field Junction Boxes

**Electrical Power and Control Cabling (Low Voltage)**

- Cable SWA armouring shall be stripped back to the entry point into the associated equipment housing/termination box/panel and shall be glanded in such a manner so as to ensure electrical continuity with the gland. When terminated in hazardous areas, cable armouring shall be bonded to the panel equi-potential bonding system via means of earthing rings provided as an integral part of the gland. Contact between the gland and the gland plate shall not be considered as sufficient for bonding purposes.

- (Option 1) Cable inner PVC sheath shall be cut back at the point of entry into the equipment housing/termination box/panel, protrusion of the inner sheath into the associated switchgear cabinet/equipment housings shall be a minimum of 25mm and a maximum of 50mm. Heat shrink tubing shall be applied at the point of entry into the equipment housing/termination box/panel, in order to protect the cable and prevent the ingress of moisture.

  (Option 2) Where cables are glanded into panels, cable inner PVC sheaths may be taken directly into trunking/marshalling arrangements, with the inner PVC sheaths cut back at point of termination. Note that in this instance, heat shrink need not be applied at the point of entry into the cabinet.


Copyright © Transnet Pipelines, All rights reserved, including rights to amendments

- All individual cable cores (including spares) will be left long enough to accommodate 200mm slack, i.e. taking into account the routing via the trunking.

- Excess lengths of individual cable cores will be neatly folded and tied within the trunking provided.

- Termination of individual cable cores in the termination strips will be such that all Starter related cabling will be terminated to one side of termination strips, whilst all field cabling will be connected to the other side of termination strips.

- All cables connected to individual instruments/equipment will be provided with a single loop of minimum diameter of 150mm. All loops will be neatly strapped.

8.1.3.3 Cable Identification

All instrument and electrical cables will be marked with an identification number /cable tag at both ends. Identification numbers will be approximately 10 characters and will comprise of the following specification:

**All Field Cabling:**
Grafoplast Targa Metal TGT System (Carrier Rail length: 58mm for 7 characters, 82mm for 11 characters, 106mm for 15 characters) 316 Stainless Steel Markers, with punched text 6 mm height minimum, fastened onto the cable at both ends via means of Stainless Steel cable ties or
Laser engraved 316 Stainless Steel Markers, of length 90mm, height 10mm and text height 6mm. Note that the marker should have slots cut at the ends for attaching cable ties. Tags shall be fastened onto the cable at both ends via means of Stainless Steel cable ties.

Note that selection as to which cable-tagging system to use shall be made on a site basis i.e. a mix of both systems on one site will not be accepted.

Cable Tags associated with instrument and electrical cabling entering or leaving termination/junction boxes in the field will be attached to the cable outside of the marshalling cabinet i.e. below the gland plate and within 150mm of the entry point to the cabinet.

**Cabling installed within buildings:**

1. Where Cable Tags are fixed to the cable within Electrical / PLC Panels:

   Grafoplast Trasp Series 130 Gull-wing transparent PVC sleeves (30mm in length), with printed text black on white background, fastened onto the cable via means of Stainless Steel cable ties. Text height to be 3mm minimum.

2. Where Cable Tags are fixed to the cable outside of Electrical / PLC Panels:

Grafoplast Targa Metal TGT System (Carrier Rail length: 58mm for 7 characters, 82mm for 11 characters, 106mm for 15 characters) 316 Stainless Steel Markers, with punched text 6 mm height minimum, fastened onto the cable via means of Stainless Steel cable ties or

Laser engraved 316 Stainless Steel Markers, of length 90mm, height 10mm and text height 6mm. Note that the marker should have slots cut at the ends for attaching cable


Copyright © Transnet Pipelines, All rights reserved, including rights to amendments

ties. Tags shall be fastened onto the cable at both ends via means of Stainless Steel cable ties.

Note that selection as to which cable-tagging system to use shall be made on a site basis i.e. a mix of both systems on one site will not be accepted.

For details on Cable Identification Standards, refer to Section 8.5 of this Specification.

8.1.3.4 Cable Core Identification

All individual instrument and control cable cores (including spares) will be marked with an identification number at both ends. Identification numbers will be approximately 10 characters in length and will comprise of the following specification:

- Instrumentation - Grafoplast Printed (Black lettering on white background)
- Electrical - Power - Crutchley
- Electrical - Control - Crutchley

Identification characters will be sized to correspond to the overall diameter of the individual cores, i.e. ID tag sheaths will be sized and provided with a good fit (not loose) over the core ends.

Identification tags will be so located as to leave cable core/pair lettering/numbering visible. Individual core labelling will, in this respect, be approximately 11 characters per label. Text on core idents shall be black on white or yellow background, except for Trip “T” idents which shall be black on red background.

For details on Cable Core Identification Standards, refer to Section 8.6 of this Specification.

8.1.3.5 Cable Core Lugging

All individual cable cores will be neatly terminated. Appropriately sized lugs will be attached to all core ends, using the appropriate crimping tool (not side cutters or ordinary pliers). The colouring of crimps will match the size of the associated cable core. All cable lugs utilised shall comply with the following specification, unless otherwise specified in the Scope of Work attached to an Order:

- Instrument Cables - bootlace ferrules
- Electrical Power Cables - spade lugs for compression terminals, ring lugs for screw terminals (pin lugs are not acceptable)
- Electrical Control Cables - spade lugs for compression terminals, ring lugs for screw terminals (pin lugs are not acceptable)

8.1.3.6 Cable Screening – Instrument Cabling

**Individual Screens**

All Individual Instrument Cable Pair Screens shall be terminated into terminals provided within the Instrument Termination Boxes as well as the Field Junction Boxes, and shall be grounded to a common insulated earth rail to be provided in each of the Control System Marshalling Cabinets, alongside the Termination Rails provided. Individual Screens shall be terminated in such a manner so as to be continuous from the Instrument/Instrument Termination Box to the Control System Marshalling Cabinets i.e. individual instrument cables as well as multi-pair cables.


Copyright © Transnet Pipelines, All rights reserved, including rights to amendments

Individual screen terminals shall be insulated in the Termination Boxes and Field Junction Boxes provided, thus ensuring that the individual cable pair screens are not grounded at instrument/equipment ends, i.e. to prevent common mode noise. Where Instrument Cables terminate directly into Instrument housings, individual screens shall be cut back and insulated within the Instrument housing using heat shrink sleeving, to prevent inadvertent contact with any conducting surfaces.

All individual screen earth rails in the Control System Marshalling Cabinets will be connected to the existing panel Instrument Earth bar via means of a 25mm insulated earth cable, which shall in turn be connected at two points via means of PVC Cu 70mm2 insulated earth cables (Yellow/Green in colour), to the Instrument Earth bar located within the control room.

**Overall Screens**

All Instrument Cable Overall Screens/Drain wires shall be terminated to insulated earth bars provided within the Field Junction Boxes, and shall be earthed to a common electrical earth bar to be provided in each of the Control System Marshalling Cabinets. Overall Screens /Drain Wires shall be cut back and insulated within the Instrument Termination Boxes and Instrument housings (where applicable) to prevent inadvertent contact with the Termination Box housing, utilising heat shrink sleeving. Overall Screens shall be terminated in such a manner so as to be continuous from the Instrument Junction Box to the Control System Marshalling Cabinets.

The electrical earth bar shall be earthed to the Cabinet Frame, and connected at two points via means of PVC Cu 70mm2 insulated earth cables (Yellow/Green in colour), to the Electrical Earth bar located within the control room.

8.1.3.7 Cable Screening – Electrical Cabling (Power & Control)

All electrical cable screens/drain wires (where applicable) will be grounded to a common electrical earth bar to be provided in each of the Control System Marshalling Cabinets/Switchgear Cubicles. The electrical earth bar shall be earthed to the Cabinet Frame, and connected at two points via means of PVC Cu 70mm2 insulated earth cables (Yellow/Green in colour), to the Electrical Earth bar located within the control and switchgear rooms.

8.1.3.8 Cable Testing – Low Voltage Cables (< 1 kV)

Each individual core of all cables (including spares) will be checked for continuity and insulation breakdown, in accordance with SANS 1507:2007 (PVC):

- Insulation Resistance shall be measured with a 1000V Megger and the readings tabulated and certified.
- Similarly, earth continuity resistance shall be measured and recorded.
- All cables will be checked for correct termination.

8.1.3.9 Cable Testing – Medium Voltage Cables (< 22 kV)

Each section of laid and jointed cable shall be tested, in accordance with SANS 97:2001 (PILC/SWA):

- Insulation Resistance shall be measured with a 1000V Megger, followed by the relevant pressure test. Readings shall be tabulated and certified.


Copyright © Transnet Pipelines, All rights reserved, including rights to amendments

- AC test voltage must be applied to each phase in turn for one minute, or alternatively the DC test voltage for fifteen minutes. Leakage current shall be measured and recorded for each test.
- All cables will be checked for correct termination.

## 8.2 Instrumentation Cabling

Instrument Cabling as defined within this and other Transnet Pipelines Specifications includes the following types of cabling:

1. PVC SWA Multicore instrument cables running between Instrument Junction Boxes in the field and PLC Cabinets (IS and non-IS rated)
2. PVC SWA Multicore instrument cables running between instruments in the field and PLC Cabinets (IS and non-IS rated)
3. Dekabon armoured instrument cables running between Junction Boxes in the field and the instruments themselves (IS and non-IS rated)

8.2.1 All Instrumentation Cabling will comply in all respects to the specifications as contained in the Scope of Work attached to an Order. In the absence of cable specifications being detailed in the Scope of Work attached to an Order, the following cable specifications will apply.

8.2.2 Instrument cabling will be marshalled on Instrument racking and trenching as defined elsewhere within this specification.

8.2.3 Instrument multi-core cabling running between the Field Junction Boxes and the Control System Marshalling Cabinets will comprise of steel wire armoured, PVC Insulated, individual and overall screened multi-core cable. Note that Transnet Pipelines has standardised on 1 pair, 2 pair, 8 pair and 16 pair cable – prior approval from Transnet Pipelines will be required to deviate from these specifications.

Conductors:

Core Size : 1.0 mm2
Stranded untinned copper, 7 strands minimum
PVC Insulated, Insulation Breakdown Voltage between conductor-earth, conductor-screen and screen-earth to withstand 500V 50Hz RMS for a 1 min
Insulation Colours : Black and White
Multipair cores to be numbered (numeric on both conductors of the pairs)
Lay Twist to be 40 – 60 mm (i.e. 16-25 twist per metre)

Shield/Screen

Individual & overall screened – plasticised aluminium foil (100%) coverage
Stranded tinned copper drain wire 0.5 mm2

Inner Jacket

Extruded fire retardant black PVC with rip cord for jacket removal.
Minimum thickness 1.2mm up to 8 pair, 1.5 mm for 16 to 36 pair

Outer Jacket

Overall weatherproof thermoplastic PVC jacket – UV resistant (Carbon Black added)


Copyright © Transnet Pipelines, All rights reserved, including rights to amendments

Jacket thickness 1.5mm up to 8 pair, 2.0 mm for 16 to 36 pair.
Jacket to be totally bonded to a steel wire armoured sleeve.

IS Circuits: Jacket color light blue Non IS Circuits: Jacket color black.

8.2.4 Individual Instrument cabling running between the Field Junction Boxes and the individual field mounted Instruments will comprise of Dekabon armoured, PVC Insulated, individual and overall screened multi-core cable. Note that Transnet Pipelines has standardised on 1, 2, 4 and Triad cable – prior approval from Transnet Pipelines will be required to deviate from these specifications.
(Note that this specification only applies to cabling running on racks above the ground, all Instrument cables running in trenches will need to comply with the Instrument Multi-core Cable Specifications detailed above).

Conductors.

Core Size : 1.5 mm2
Stranded untinned copper, 7 strands minimum
PVC Insulated, Insulation Breakdown Voltage between conductor-earth, conductor-screen and screen-earth to withstand 500V 50Hz RMS for a 1 min
Insulation Colours : Black and White
Multipair cores to be numbered (alphanumeric on both conductors of the pairs)
Lay Twist to be 40 – 60 mm (i.e. 16-25 twist per metre)

Shield/Screen

Individual & overall screened – plasticised aluminium foil (100%) coverage
Stranded tinned copper drain wire 0.5 mm2

Inner Jacket

Extruded fire retardant black PVC with ripcord for jacket removal.
Minimum thickness 1.2mm

Outer Jacket

Overall weatherproof thermoplastic PVC jacket – UV resistant (Carbon Black added)
Jacket thickness 1.5mm.
Jacket to be totally bonded to an inner waterproof aluminium sleeve.

IS Circuits: Jacket color light blue Non IS Circuits: Jacket color black.

## 8.3 Electrical Cabling

Electrical Cabling as defined within this and other Transnet Pipelines Specifications includes the following types of cabling:

1. HV Power Cabling (88 kV to 11 kV) running between points of supply, MV Substations and associated transformers.
2. MV Power Cabling (6.6 kV to 3.3 kV) running between points of supply, MV Substations and associated transformers.
3. LV Power cabling (230/400 VAC) running between electrical equipment in the field and LV Panels, Valve Panels and Distribution Boards


Copyright © Transnet Pipelines, All rights reserved, including rights to amendments

4. LV Control Cabling running between field equipment, and between field equipment and LV Panels, Valve Panels and Distribution Boards. This will include valve actuator control signals, motor start/stop panels, supply breaker inter-tripping signals etc.

8.3.1 All HV & MV Power cabling shall be in compliance with the specifications as stated in the Scope of Work attached to an Order.

8.3.2 Unless otherwise specified, MV Power Cabling (6.6/3.3 kV) shall conform to the following specifications:

- PVC Insulated, PVC Bedded, SWA PVC Sheathed, 6.6/3.3 kV, 3 core cable manufactured to SANS 1507:2007. Fire retardant, UV resistant, low-toxic fume emitting plastics to be used for outer jacket.

8.3.3 All LV Power & Control cabling will be marshalled on LV Electrical racking and trenching as defined elsewhere within this specification.

8.3.4 All LV Power Cabling (230/400 VAC) will comply in all respects to the specifications as contained in the Scope of Work attached to an Order. In this regard, Contractors are to note that the responsibility for correct cable core sizing shall remain at all times with the contractor.

In the absence of cable specifications being detailed in the Scope of Work attached to an Order, the following cable specifications will apply to all cabling of voltage 600 V/1000 V or less: (In full compliance with SABS 1507).

8.3.4.1 Electrical LV Power cabling running between Equipment located in the field, LV Panels or Motor Control Centre Panels, Valve Panels and Distribution Boards will comprise of steel wire armoured, PVC Insulated, four core cable, as follows:

Conductors.

Core Size : 4 core - Rated as per application (SABS 10142-1)
Stranded untinned copper, 7 strands minimum
PVC Insulated, Insulation Breakdown Voltage to withstand 2 kV 50Hz RMS for a 1 min period
Insulation Colours : Colored RD-BL-YE/WT-BK (not numbered)
Lay Twist to be 40 – 60 mm (i.e. 16-25 twist per metre)

Inner Jacket

Extruded fire retardant black PVC with rip cord for jacket removal.
Minimum thickness 1.2mm

Outer Jacket

Overall weatherproof thermoplastic PVC jacket – fire retardant and UV resistant.
Jacket thickness 1.5mm.
Jacket to be totally bonded to a steel wire armoured sleeve.

Fire retardant, low halogen (20% Halogen, Blue Stripe) plastics to be used in non-ventilated areas. Fire retardant, high halogen (100% Halogen, Red Stripe) plastics may be used in ventilated areas. Fire retardant, no halogen (0% Halogen, White Stripe) plastics not required to be used.


Copyright © Transnet Pipelines, All rights reserved, including rights to amendments

8.3.4.2 Electrical Control cabling running between the Equipment located in the field, Control System Marshalling Cabinets, LV Panels and Incomer Breaker panels will comprise of steel wire armoured, PVC Insulated, multi-core cable, as follows :

Conductors.

Core Size : 7 core – 1.5 mm2 (Valve Actuators)
12 core – 1.5 mm2, 19 core – 1.5 mm2 (Switchgear)
Stranded untinned copper, 7 strands minimum
PVC Insulated, Insulation Breakdown Voltage to withstand 2 kV 50Hz RMS for a 1 min
Insulation Colours : 7 core and less – colored BL-YE/WT-RD-GR-BK-BR-PR/OR (Not numbered)
12 core and more – black, conductors to be numbered
Lay Twist to be 40 – 60 mm (i.e. 16-25 twist per metre)

Inner Jacket

Extruded fire retardant black PVC with ripcord for jacket removal.
Minimum thickness 1.2mm up to 7 core, 1.5mm for 12 and 19 core

Outer Jacket

Overall weatherproof thermoplastic PVC jacket – fire retardant and UV resistant.
Jacket thickness 1.5mm up to 7 core, 2.0mm for 12 and 19 core
Jacket to be totally bonded to a steel wire armoured sleeve.

Fire retardant, low halogen (20% Halogen, Blue Stripe) plastics to be used in non-ventilated areas. Fire retardant, high halogen (100% Halogen, Red Stripe) plastics may be used in ventilated areas. Fire retardant, no halogen (0% Halogen, White Stripe) plastics are not required to be used.

## 8.4 Additional Requirements for Ex ia/ib Installations

8.4.1 All I.S. (Ex ia/ib Intrinsically Safe) Installations shall be in strict compliance with IEC 79-14 Electrical Installations in Hazardous Areas, and in particular Chp 12 "Additional Requirements for type protection Instrinsic Safety", inclusive of the under mentioned items.

8.4.2 **Clause 12.2.**
In installations with Zone 1 and 2 classifications, IS apparatus and the intrinsically safe parts of associated apparatus shall comply to at least category "ib". Note that Transnet Pipelines has standardised on category "ia" protection, and permission will need to be sought in writing for relaxation to "ib".

8.4.3 **Cables - General**
Where multi stranded cables are used in a hazardous area, the ends of the conductor shall be protected against separation of individual strands, by means of cable lugs.

Where cable screens are required, these shall be connected to earth at one point only, normally in the non-hazardous area. (Refer to Transnet Pipelines Specification PL727 Section 8.1.3.6 and 8.1.3.7).

Cable armouring shall normally be bonded to the equi-potential bonding system via the cable entry devices (glands), at the end of each cable run. Where interposing Junction Boxes exist or other apparatus, the armouring shall be similarly bonded to the equi-potential bonding system at these points. In this regard and where earthing rings are


Copyright © Transnet Pipelines, All rights reserved, including rights to amendments

provided as an integral part of the gland, use of these is recommended in serving this function. Contact between the gland and the gland plate shall not be considered as sufficient for bonding purposes.

Conductors of intrinsically safe circuits and non-intrinsically safe circuits shall not be carried in the same cable.

Conductors of intrinsically safe circuits and non-intrinsically safe circuits in the same bundle or duct shall be separated by an intermediate layer of insulated material or by an earthed metal partition. No segregation is required if metal sheaths or screens are used for intrinsically safe or non-intrinsically safe circuits. Note that Transnet Pipelines has standardised on physical separation regardless of whether the cabling is screened or not, and permission will need to be sought in writing for relaxation.

8.4.4 **Cables - Marking**

Un-armoured Cables containing intrinsically safe circuits shall be marked. If outer sheaths are marked by color, the color used shall be light blue. Note that whilst armoured cabling is not required to be marked in terms of IEC79-14, Transnet Pipelines has standardised on the principle of marking all cable outer sheaths carrying intrinsically safe circuits by color (light blue), whether armoured or not, and that this will need to be complied with in all instances.

8.4.5 **Cable Insulation Tests**

All cables carrying intrinsically safe circuits shall be proven to be capable of withstanding an RMS AC test voltage of twice the normal voltage of the intrinsically safe circuit with a minimum of 500 V between the armouring and screens joined together and the individual conductors. Tests shall be conducted in accordance with manufacturers specifications. Where no such method is available, tests shall be carried out as follows:

- Voltage shall be an ac voltage of sinusoidal waveform at a frequency of between 48 and 62 Hertz
- Voltage shall be derived from a transformer of at least 500 VA output
- Voltage shall be increased steadily to the specified value in a period of not less than 10 seconds and maintained for a period of not less than 60 seconds.

8.4.6 **Cable Termination**

All terminals shall be reliably separated from non-intrinsically safe circuits (for example by a separating panel or gap of at least 50mm). Terminals of intrinsically safe circuits shall be marked as such. Transnet Pipelines has standardised on marking by color - the specified color being light blue. All terminals, plugs and sockets shall satisfy the requirements of IEC79-11 Sections 6.3.1 and 6.3.2 respectively (6mm creepage and clearance rules 4mm to earth).

8.4.7 **Zone 1 Installations - Surge Protection**

All equipment installed in Zone 0 areas and exposed to hazardous potential differences (e.g. lightning surges), shall have a surge protection device installed between each non-earth bonded conductor/core and the local earthed structure as near as is practically possible. The surge protection device shall be capable of diverting a minimum peak discharge current of 10kA (8/20 microsecond impulse according to IEC60-1, 10 operations). The bonding connection between the protection device and the structure shall have a minimum cross sectional area equivalent to 4 mm2 copper.

Note that Transnet Pipelines has extended these requirements to include all analogue transmitters installed in the field, whether in hazardous areas or not, and will need to be complied with in all instances.


Copyright © Transnet Pipelines, All rights reserved, including rights to amendments

## 8.5 Electrical & Instrument Cable Identification Standards

These standards have been based on the Transnet Pipelines Identification Standard as defined in the Document G52001 – L4017-U101 Sheets 1-4, which is largely based on the DIN 40 719 Standard. Refer to Transnet Pipelines Specification PL 101 Plant & Equipment Tag Numbering Standards.

### 8.5.1 DEFINITION.

All Cabling (inclusive of Instrument, Electrical Power and Control Cables) are to be tagged as follows:

**A – NN XXXX YYY – nn**

Where: **A** represents Cable Usage as follows: P = Power C = Control, Instrument

**NN XXXX YYY** represents the Functional Descriptor of the equipment to which the cable is terminated – either source or destination. (As defined in Transnet Pipelines Standard Dwg G52001-L4017-U101)

**nn** may be optionally used to provide additional information regarding Cable Function. (e.g. A = Analogue, D = Digital, H = Heater, ES = Emergency Stop). Where two cables of the same functionality are terminated to the same device/equipment, then this identifier may be used in the form of a unique cable number in order to uniquely identify the cables.

### 8.5.2 RULES OF ASSIGNMENT

8.5.2.1 Cable Usage will be indicated on all cables by utilising the Cable Usage Identifier (P for power and C for Control and Instrument cabling).

8.5.2.2 Cables will be identified using the Functional Descriptor of the device/equipment to which the cable has been terminated. Either source or destination device Functional Descriptors may be used; selection shall be based on the Descriptor that will convey the most information about the cable.

Examples:
In the case of a power cable feeding an auxiliary pump from a LV Panel, the Functional Descriptor of the auxiliary pump shall be used
In the case of a power cable feeding lights and plugs from a DB Board, the Functional Descriptor of the DB Board Feeder shall be used

8.5.2.3 An additional Identifier may be allocated to the Cable Tag to indicate additional information regarding Cable Function. **Note that use of this Identifier is optional and is normally used in the following circumstances:**

Instrument Multi-cores to indicate Signal Type : A = Analogue, D = Digital
Electrical cables to indicate Function : ES = Emerg Stop, H = Heater Supply

### 8.5.3 EXAMPLES / INTERPRETATION

#### 8.5.3.1 INSTRUMENT CABLES


Copyright © Transnet Pipelines, All rights reserved, including rights to amendments

Instrument cables may be divided into two types, namely individual Instrument cabling running from the instrument itself to a Junction Box, and Instrument Multi-core cabling running from the Junction Box to the Marshalling Cabinet located in the Control Room.

In the case of individual Instrument cables, the Functional Identifier used in the Cable Tag always relates to the Instrument to which the cable has been terminated. In the case of Instrument Multi-core Cables, the Functional Identifier used in the Cable Tag always relates to the Junction Box to which the cable has been terminated.

(Examples listed below describe cables located at the Coalbrook Pump Station - hence use of the Pump Station Identifier No. 17).

| | |
|---|---|
| C – 17JB01 – A | Instrument Multi-core Cable carrying analog signals and running from the Field Junction Box 17JB01 to the PLC Panel 17PLCnn |
| C – 17JB01 – A/D | Instrument Multi-core Cable carrying both digital and analog signals and running from the Field Junction Box 17JB01 to the PLC Panel 17PLCnn |
| C – 17TT011 | Instrument Cable running from the Instrument TT011 to Junction Box 17JBnn in the field |
| C – 17VE011 | Instrument Cable running from the Vibration Sensor VE011 to Junction Box 17JBnn in the field |

### 8.5.3.2 VALVE ACTUATOR CABLES

Valve Actuator cables may be divided into two types, namely actuator power cabling running from the actuator to the Valve Distribution Panel, and actuator control cabling running from the Junction Box to the PLC Marshalling Cabinet located in the Control Room.

In the case of both actuator power and control cabling, the Functional Identifier used in the Cable Tag always relates to the actuator to which the cable has been terminated.

(Examples listed below describe cables located at the Coalbrook Pump Station - hence use of the Pump Station Identifier No. 17).

| | |
|---|---|
| P - 17XVR1A | Supply to Valve Actuator R1A, fed from Valve Distribution Panel 17LVnn. |
| C – 17XVR1A – D | Cable running from Valve Actuator R1A to PLC Panel 17PLCnn in Control Room, carrying digital signals. |
| C – 17CVP0J – A | Cable running from Valve Actuator P0J to PLC Panel 17PLCnn in Control Room, carrying analogue signals |

### 8.5.3.3 INCOMER BREAKER/ TRANSFORMER / MOTOR STARTER CABLES

Incomer Breaker/ Transformer/ Motor Starter cables may be divided into two types; namely power cabling (e.g. running from the motor to the Starter Panel) and control cabling (e.g. running from E/Stops located in the field to the Starter Panel or running from the Starter Panel to the PLC Marshalling Cabinet located in the Control Room).


Copyright © Transnet Pipelines, All rights reserved, including rights to amendments

In cases where the cable runs directly to the device (or field mounted local operator panels mounted alongside the device e.g. E/Stop pushbutton station), the Functional Identifier used in the Cable Tag always relates to the device to which the cable is terminated. In cases where the cable runs between two Starter/Incomer Panels, the Functional Identifier used in the Cable Tag usually relates to the destination Starter Panel.

(Examples listed below describe cables located at the Coalbrook Pump Station - hence use of the Pump Station Identifier No. 17).

| | |
|---|---|
| C – 17MVF11 | Control cable carrying electrical signals and running to the rear of the Incomer Panel 17MVF11 (associated with Incomer OCB F11) |
| C – 17MVF11-1 | One of two control cables carrying electrical signals and running to the rear of the Incomer Panel 17MVF11 (associated with Incomer OCB F11) |
| C – 17A1 | Control cable running from Aux Transformer A1 to Incomer Panel 17MV nn.<br>**Note:** The cable carries both PLC feedback signals and electrical tripping signals – if the cable carried only digital PLC Feedback signals, the cable would be tagged C-17A1-D. |
| C – 17MVF11 - ES1 | Control Cable running to Incomer Panel 17MVF11 (associated with OCB F11) from Station E/Stop Breakglass No. 1. located in the field. |
| C – 17MVF11 - ES2 | Control Cable running to Incomer Panel 17MVF11 (associated with OCB F11) from Station E/Stop Breakglass No. 2. located in the field. |
| P – 17LV21-1<br>P – 17LV21-2 | Supply to Constant Voltage Transformer from LV Panel 17LV21<br>Supply from Constant Voltage Transformer to LV Panel 17LV21 |
| P - 17X01 | Supply to Auxiliary Pump X01, sourced from LV Panel 17LV nn. |
| C - 17X01 - ES | E/Stop associated with Aux Pump X01 and wired to the Starter LVX01 located in LV Panel 17LVnn. |
| P - 17P01 - H | Heater Supply for Motor P01, sourced from LV Panel 17LV nn. |
| P – 17MV01 - H | Heater Supply for Incomer Panel 17 MV01 sourced from LV Panel 17LVnn. |
| C – 17MVP01 - H | Control Cable running between Motor Starter Panel 17MVP01 and LV Panel 17LVnn – used to control the switching of the Heater Supply based on P01 Starter status. |
| P – 17 E06 | Supply cable running from Standby Generator E06 to LV Panel 17LVnn. |
| C – 17GEN01 – D | Cable running from the Standby Generator Control Panel 17GEN01 to the LV Panel – ET200 PLC, carrying PLC digital feedback signals associated with the Standby Generator. |

### 8.5.3.4 POWER DISTRIBUTION CABLES


Copyright © Transnet Pipelines, All rights reserved, including rights to amendments

**Power Distribution Rail identification.**
Where multiple Power Distribution Rails are located within panels (e.g. MV, LV, PLC Panels), these are uniquely identified by use of a Distribution Rail Identifier appended to the Panel Identifier, as follows:

NN XXXXYYY B nnn

Where NN XXXXYYY represents the Panel Identifier (As defined in Transnet Pipelines Standard Dwg G52001-L4017-U101)

| | | |
|---|---|---|
| G nn: | 24 VDC | |
| J nnn: | 220 VAC | where nnn is a unique number used to identify |
| E nnn: | 380 VAC | the different power rails within the same panel |

Primary Distribution Rail Identification numbers are numbered consecutively from 1 – 99, with sub distribution feeders related to the primary feeder by the addition of a suffix (comprising of a unique consecutive number), in this way identifying the primary feed.

For example, a 24 VDC Distribution Rail located in LV Panel 17ETL01 will have a Distribution Rail ID of 17ETL01.G50. The Distribution Rail in 17ETM01 will have an ID of 17ETM01.G501, thus identifying it as a sub feed of rail G50.

**Power Distribution Circuit Breaker identification.**
Power Distribution Circuit Breakers are uniquely identified by use of a Distribution Circuit Breaker Identifier appended to the Panel Identifier, as follows:

NN XXXXYYY Q nnn

Where NN XXXXYYY represents the Panel Identifier (As defined in Transnet Pipelines Standard Dwg G52001-L4017-U101)

Q nnn: where nnn is a unique number used to identify the different circuit breakers within the same panel

Primary Circuit Breaker Identification numbers are numbered consecutively from 1 – 99, with sub distribution feeders related to the primary feeder by the addition of a suffix (comprising of a unique consecutive number), in this way identifying the primary feed. For example, if the incomer MCB for a DB Board is labelled Q01, then all MCB's fed from Q01 will be labelled Q10, Q11, Q12 etc. If a MCB is labelled Q21, then all MCB's fed from Q21 will be labelled Q210, Q211, Q212 etc.

Note that MCB's fed from normal supply will be labelled consecutively from Q01 onwards, whereas MCB's fed from Emergency Supply will be labelled consecutively from Q60 onwards.

Where multiple distribution rails exist within a panel, the Distribution Circuit Breaker Identifier will include the Distribution Rail Identifier as a prefix i.e. B nnn.Q nnn.

For example, MCB Q20 fed from DB Board 17DB10, will have an Identifier of 17DB10 .Q20; MCB Q55 fed from LV Panel 17ETL01 Distribution Rail G50, will have an Identifier of 17ETL01.G50-Q55.

**Power Distribution Cable identification.**


Copyright © Transnet Pipelines, All rights reserved, including rights to amendments

Distribution Feeder Cable Identifiers comprise of two components; namely, the Panel Identifier from which they are fed, and the unique Circuit Breaker ID number allocated to each Feeder.

NN XXXXYYY Qnnn

Where NN XXXXYYY represents the Panel Identifier (As defined in Transnet Pipelines Standard Dwg G52001-L4017-U101)

Qnnn represents the Protection/Circuit Breaker Identifier, numbered from 1 – 999.

(Examples listed below describe cables located at the Coalbrook Pump Station - hence use of the Pump Station Identifier No. 17).

| | |
|---|---|
| P–17DB01 | Cable Tag for a power cable fed from LV Panel 17LVnn and used to feed 380/400 V AC mains to 17DB01. **(Feeder Cable)** |
| P–17DB01.Q10 | Cable Tag for a power distribution cable fed from DB Board 17DB01 MCB Q10. **(Distribution Cable)** |
| P–17LV31.Q60 | Cable Tag for a power distribution cable fed from DB Board 17LV31 (UPS Distribution) MCB Q60 feeding for example PLC Panel 17PLC01. **(Distribution Cable)** |
| P–17PLC01.J20-Q20 | Cable Tag for a power cable fed from PLC Panel 17PLC01, 220 VAC Distribution Rail J20, MCB Q20 |
| P–17PLC01.G55-Q50 | Cable Tag for a power cable fed from PLC Panel 17PLC01, 24 VDC Distribution Rail G55, MCB Q50 |
| P–17ETL01.G55-Q50 | Cable Tag for a power cable fed from ET Panel 17ETL01, 24 VDC Distribution Rail G55, MCB Q50 |
| P – 17BATT01.Q80 | Battery Supply Distribution to field, fed from Battery Charger Panel 17BATT01 MCB Q80 (eg. 110V DC Supply to 3.3 kV Starter Panel). |

## 8.6 Cable Core Identification Standards (Core Identing)

### 8.6.1 ELECTRICAL CONTROL CIRCUIT WIRING

8.6.1.1 Core Ident Standards as detailed below are required to be adhered to with regards to identification of **control wiring** used in electrical circuits in HV, MV and LV Electrical Panels.

8.6.1.2 All conductors shall be identified by means of a core identification number, in conformity with the approved circuit and connection diagrams. All core ident numbers shall be unique and shall be placed on either end of the conductor. Core Ident numbers shall comprise of solid heavy-duty interlocking ferrules bearing clear permanent engraved black characters on white background. Crutchley core ident markers shall be utilized.


Copyright © Transnet Pipelines, All rights reserved, including rights to amendments

8.6.1.3 All circuit diagrams shall clearly identify all termination/connection points with the appropriate terminal identification numbers.

8.6.1.4 Core Ident numbers shall comply with the following specification:

**Y XXX (T)**

where

**Y--- (T)** represents an alphanumeric character to indicate signal type

- "M" denotes AC feed to primary of Voltage Transformer (Primary Supply)
- "H" denotes AC feed (un-rectified) from secondary of Voltage Transformer
- "J" denotes DC feed (rectified) from secondary of Voltage Transformer
- "C" denotes phase wiring from Current Transformers
- "E" denotes phase wiring to panel mounted voltmeters
- "D" denotes phase wiring to panel mounted ammeters
- "S" denotes wiring from Current Transducers ( 4-20 mA)
- "K" denotes control wiring fed from a DC Control Voltage Supply (e.g 50 VDC, 110 VDC)
- "Kxxx(T)" denotes control wiring with trip functionality. Note that the "T" marker shall comply with white on red background coloring.
- " " denotes control wiring fed from an AC Control Voltage Supply (e.g. 220 VAC)
- "X" denotes status feedback wiring to Control Systems (usually voltage free contacts)
- "U" denotes unused/spare auxiliary contact wiring (usually voltage free contacts)

**XXX** represents a unique numeric identifier, up to a maximum of three digits

**Examples:**

| | |
|---|---|
| K1(T) | Tripping circuit fed from DC Control Voltage Supply (50 VDC/110 VDC) |
| K10 | Control Circuit fed from DC Control Voltage Supply (50 VDC/110 VDC) |
| 501 | Control Circuit fed from AC Control Voltage Supply (220 VAC) |
| U101 | Auxillary Switch circuit |
| X101 | Status Feedback to Control System (e.g PLC) |
| E10, E20, E30 | Three phase wiring fed to panel mounted Voltmeter |

## 8.6.2 POWER DISTRIBUTION WIRING

8.6.2.1 Core Ident Standards as detailed below are required to be adhered to with regards to identification of power distribution wiring as follows:

- Power Distribution in PLC and Equipment Panels (24 VDC, 220 VAC)
- Power Distribution in ET200 Panels (24 VDC, 220 VAC). Note this includes ET200 PLC Interface Cubicles located in HV, MV and LV Panels.

8.6.2.2 All Distribution Feeder Wiring shall be core idented using the Functional Descriptor of the feeder/circuit breaker to which the cable has been terminated, as well as the terminal into which the core has been terminated.

AAA . Bnnn - Qnnn - xx


Copyright © Transnet Pipelines, All rights reserved, including rights to amendments

Where - AAA represents Power Type and Distribution Feeder (where applicable) as follows:

| | |
|---|---|
| 0V | : 0V |
| 24V | : 24V positive |
| 110V | : 110V positive |
| 220V | : 220V live |
| N | : 220V neutral |

- Bnnn represents the Distribution Rail ID where assigned (only assigned in panels with multiple power distribution rails)

- Qnnn represents the Protection/Circuit Breaker Identifier

- xx represents the terminal into which the core is terminated

(Refer to PL 727 Section 8.5.3.4 for details on the derivation of Distribution Feeder Functional Identifiers).

Examples:

| | |
|---|---|
| 24V.G55 - Q20 – 10 | Core Ident for wiring feeding 24 VDC from Distribution Rail G55 MCB Q20 and terminated into terminal 10. |
| 0V.G55 - 30 – 2-A1 | Core Ident for wiring feeding 0 VDC from Distr Rail G55 (associated with MCB Q30) and terminated into terminal 2-A1 (Relay A1) |
| 220V.J20 - Q15 – 5 | Core Ident for wiring feeding 220 VAC Live from Distribution Rail J20 MCB Q15 and terminated into equipment terminal 5 |
| N.J20 - 30 – 6 | Core Ident for wiring feeding 220 VAC Neutral from Neutral Rail J20 (associated with MCB Q30) and terminated into equipment terminal 6 |
| 220V.Q15 – 5 | Core Ident for wiring feeding 220 VAC Live from MCB Q15 and terminated into equipment terminal 5 (Distribution Rail Identifier is not required where multiple distribution rails are not in existence) |
| N. 30 – 6 | Core Ident for wiring feeding 220 VAC Neutral from Neutral Rail (associated with MCB Q30) and terminated into equipment terminal 6 (Distribution Rail Identifier is not required where multiple distribution rails are not in existence) |

8.6.2.3 Core Ident numbers will be approximately 10 characters in length and will comprise of Grafoplast printed (black lettering on white background) core ident markers. Identification characters will be sized to correspond to the overall diameter of the individual cores, i.e. ID tag sheaths will be sized and provided with a good fit (not loose) over the core ends. Identification tags will be so located as to leave cable core/pair lettering/numbering visible and shall be placed on both ends of the conductor. A sheath length of 30mm has been standardised upon by Transnet Pipelines.

## 8.6.3 INSTRUMENTATION AND EQUIPMENT PLC INTERFACE WIRING.

8.6.3.1 Core Ident Standards as detailed below are required to be adhered to with regards to identification of all Instrumentation and Equipment PLC Interface wiring (derived from electrical circuits in HV, MV and LV Electrical Panels).


Copyright © Transnet Pipelines, All rights reserved, including rights to amendments

8.6.3.2 Core Ident Standards have been detailed in the following Typical Loop Diagrams attached to this Specification:

- Typical Loop Diagram – Instrumentation 727-005/InstrLoop Rev 0.1
- Typical Loop Diagram – Actuated Valves 727-006/VlvLoop Rev 0.1

8.6.3.3 All individual instrument and control cable cores (including spares) will be marked with an identification number at both ends. Identification numbers will be approximately 10 characters in length and will comprise of printed (black lettering on white background) Grafoplast Ident Markers. A sheath length of 30mm has been standardised upon by Transnet Pipelines.

8.6.3.4 Identification characters will be sized to correspond to the overall diameter of the individual cores, i.e. ID tag sheaths will be sized and provided with a good fit (not loose) over the core ends.

8.6.3.5 Identification tags will be so located as to leave cable core/pair lettering/numbering visible.

# 9. COMMUNICATION INFRASTRUCTURE IDENTIFICATION STANDARDS

This specification details standards and codes of practice to be adhered to in the identification of Communication Equipment and associated communication cabling Infrastructure. These standards should be adhered to on all Transnet Pipelines Sites.

Diagrammatic Examples of the under mentioned detail may be found in Appendix B of this document.

## 9.1 Communication Equipment Identification Standards

All Communications Equipment will be identified using the following Functional Descriptors:

=XX YYY nn

Where - XX represents the Station Identifier
- YYY represents the Equipment Type (refer below for details)
- nn is a unique consecutive number

For example: A Comms Panel located at PS1, will have an identifier of =51 COM 01

**EQUIPMENT TYPE: (YYY)**

Communications Panel = COM

| | |
|---|---|
| Terminal Bus Scalance Units = | SJT |
| System Bus A Scalance Units = | SJA |
| System Bus B Scalance Units = | SJB |
| CAS Network Scalance Units = | SJC |
| ST7 Network Scalance Units = | SJS |
| Electrical Network Scalance Units = | SJE |


Copyright © Transnet Pipelines, All rights reserved, including rights to amendments

Cisco Network Routers = SJR
OTN Network Routers = SJO

Patch Panels = X
HUB / Switch = HB

Sever Panel = SVR

PCS7 Server A = SVRA
PCS7 Server B = SVRB
PCS7 Client (Operational) = OSC
Replay Server = RPY
Engineering Server = ENG
KVM Switch = KVM

OLM FO Convertors: - A xyz e.g. -A 21A

Where A = component designation
x = PLC No
y = OLM Set No
z = channel (A or B)

## 9.2 Communication Cable Identification

### 9.2.1 PLC Network Cabling

Cable Ident to be placed on either side of the cable as follows:

Equip A - In/Out e.g. PLC01A-IN, ET21A-OUT

Where Equip = Equipment designation PLCnr, ETnr, Hxy
A = channel (A or B)
In/Out = function (IN or OUT).

### 9.2.2 Comms Network Cabling

Cable Ident to be placed on either side of the cable as follows:

EquipSource - EquipDest - Channel e.g. OMS-HB1-10

Where EquipSource = Source equipment (eg. SUN, OMS, MUX, PTR)
EquipDest = Destination Equip (eg. HB1)
Channel = Channel No.

# 10. FIBRE OPTIC INFRASTRUCTURE IDENTIFICATION STANDARDS

This specification details standards and codes of practice to be adhered to in the identification of Fibre Optic Cabling Infrastructure, including cable, manhole and splice identifications. These standards should be adhered to on all Transnet Pipelines Sites.


Copyright © Transnet Pipelines, All rights reserved, including rights to amendments

Diagrammatic Examples of the under mentioned detail may be found in Appendix B of this document.

## 10.1 Splicing Manhole Identification

### 10.1.1 Label Text

Format = NL-SSS-DDD-XXY

Where:

N = Network (i.e. E for the enterprise network – 48 fibre 655.D or P for the process control network – 24 fibre 652.D)
L = Network link number (i.e. 1=Primary link, 2=Secondary link, etc)
SSS = Source end of network link per Transnet Pipelines standard abbreviations (see below)
DDD = Destination end of network link per Transnet Pipelines standard abbreviations (see below)
XX = Sequential number starting from 01 at source end
Y = Suffix to permit additional unplanned splices if required - Sequential letter starting from A

The source and destination are aligned with the dominant direction of product flow in the pipeline.

Examples of the above are:

P1-KDL-WAO-01 = 1st Process Control Network Primary Link splicing manhole along the Kendal-Waltloo route
P1-KDL-WAO-03 = 3rd Process Control Network Primary Link splicing manhole along the Kendal-Waltloo route
P1-KDL-WAO-24A = 1st unplanned splice between splice 23 and splice 24

### 10.1.2 Splicing Manhole Label Text

50mm high text etched in black stenciled on the manhole cover

## 10.2 Cable Ident Identification

Grafoplast Targa Metal TGT System (Carrier Rail length: 106mm for 15 characters) 316 Stainless Steel Markers, with punched text 6 mm height minimum, fastened onto the cable at both ends via means of Stainless Steel cable ties or
Laser engraved 316 Stainless Steel Markers, of length 90mm, height 10mm and text height 6mm. Note that the marker should have slots cut at the ends for attaching cable ties.

Tags shall be fastened onto the cable at both ends via means of Stainless Steel cable ties. Cable Tags are attached to the cable outside of the express joint or ODF cabinet and within 150mm of the entry point to the cabinet or express joint housing.

### 10.2.1 Cable Ident Text

Format = NL-SSS-DDD-XXYZ

Where:

N = Network (i.e. E for the enterprise network – 48 fibre 655.D or P for the process control network – 24 fibre 652.D)


Copyright © Transnet Pipelines, All rights reserved, including rights to amendments

L = Network link number (i.e. 1=Primary link, 2=Secondary link, etc)
SSS = Source end of network link per Transnet Pipelines standard abbreviations (see below)
DDD = Destination end of network link per Transnet Pipelines standard abbreviations (see below)
XX = Sequential cable number starting from 01 at source end
Y = Suffix to permit additional unplanned splices if required - Sequential letter starting from A (i.e. 24A for a unplanned splice between splice 23 and splice 24)
Z = Suffix X is added for numbering express joint cables (i.e. cable leaving/returning to the main cable)

The express joint cable to the MOBV ODF carries the number of the cable it is spliced to but with an X suffix (e.g. P1-KDL-WAO-03X)

The express joint cable from the MOBV ODF carries the number of the cable it is spliced to but with an X suffix (e.g. P1-KDL-WAO-04X)

A cable runs from a termination or splice point to the next splice or termination point, i.e. if a 4km cable is spliced at any point along its length, the cable sections either side of the splice are numbered as separate cables.

Examples of the above are:
P1-KDL-WAO-01 = 1st Process Control Network Primary Link cable along the Kendal-Waltloo route (i.e. running between the ODF at Kendal and the first splice point outside Kendal)
P1-KDL-WAO-03 = 3rd Process Control Network Primary Link cable along the Kendal-Waltloo route (i.e. running between the 2nd and 3rd splice point manholes)
P1-KDL-WAO-34X = Process Control Network Primary Link express joint cable running from express joint P1-KDL-WAO-34 (spliced to cable P1-KDL-WAO-34) to a motorised block valve along the Kendal-Waltloo route
P1-KDL-WAO-35X = Process Control Network Primary Link express joint cable running to express joint P1-KDL-WAO-34 (spliced to cable P1-KDL-WAO-35) from a motorised block valve along the Kendal-Waltloo route

## 10.3 Express / Splice Joint Identification

Grafoplast Targa Metal TGT System (Carrier Rail length: 106mm for 15 characters) 316 Stainless Steel Markers, with punched text 6 mm height minimum or
Laser engraved 316 Stainless Steel Markers, of length 90mm, height 10mm and text height 6mm. Note that the marker should have slots cut at the ends for attaching cable ties.

Cable Tags are fastened onto the express joint housing via means of Stainless Steel cable ties.

### 10.3.1 Express / Splice Joint Text

Format = NL-SSS-DDD-XXY

Where:
N = Network (i.e. E for the enterprise network – 48 fibre 655.D or P for the process control network – 24 fibre 652.D)
L = Network link number (i.e. 1=Primary link, 2=Secondary link, etc)
SSS = Source end of network link per Transnet Pipelines standard abbreviations (see below)


Copyright © Transnet Pipelines, All rights reserved, including rights to amendments

DDD = Destination end of network link per Transnet Pipelines standard abbreviations (see below)
XX = Cable number feeding the express joint
Y = Suffix X is added for numbering express joint cables (i.e. cable leaving/returning to the main cable)

# 11. EARTHING CODES OF PRACTICE

This specification details standards and codes of practice to be adhered to in the supply, installation and termination of earthing systems on all Transnet Pipelines Sites.

## 11.1 National Standards

11.1.1 The requirements of the materials, design, layout, fabrication, assembly, erection, examination, inspection and testing of an earthing system on site shall be in accordance with the relevant sections of codes: -

- SABS 089 Part 2 — 1965 — Electrical Code for Petroleum Industry
- SABS 0121 — 1977 — Cathodic Protection of Buried and Submerged Structures
- SABS 0123 — 1976 — The Control of Undesirable Static Electricity
- SABS 0198 Part 12 — 1988 — Installation of Earthing System
- SABS 0199 — 1985 — The Design and Installation of and Earth Electrode
- SABS 0200 — 1985 — Neutral Earthing in Medium Voltage Industrial Power Systems
- SABS 0292 — 1999 — Earthing of Low Voltage (LV) distribution systems
- SABS 0313 — 1999 — Protection of Structures against Lightning
- SABS 1063 — 1998 — Earth Rods and Couplers
- SABS IEC 61000-5-2 — 1997 — Electromagnetic Compatibility (EMC) Part 5: Installation and mitigation guidelines Section 2: Earthing and Cabling
- SABS IEC TS 61312-2 — 1999 — Protection against Lightning Electromagnetic Impulse (LEMP) Part 2: Shielding of structures, bonding inside structures and earthing
- SABS IEC 61024-1 — 1990 — Protection of Structures against Lightning Part 1: General principles
- SABS IEC 61024-1-1 — 1993 — Protection of Structures against Lightning Part 1: General principles


Copyright © Transnet Pipelines, All rights reserved, including rights to amendments

| | | |
|---|---|---|
| | | Section 1: Guide A – Selection of protection levels for lightning protection systems |
| • SABS IEC 61024-1-2 | 1998 | Protection of Structures against Lightning Part 1-2: General Principles Guide B – Design, Installation, maintenance and inspection of lightning protection systems |
| • SABS IEC 61312-1 | 1995 | Protection against Lightning Electromagnetic Impulse Part 1: General principles |
| • SABS IEC 61312-4 | 1998 | Protection against Lightning Electromagnetic Impulse Part 4: Protection of Equipment in existing structures |
| • SABS IEC 61643-1 | 1998 | Surge Protective Devices Connected to Low Voltage Power Distribution Systems Part 1: Performance requirements and testing methods |
| • SABS IEC TS 61312-2 | 1999 | Protection against Lightning Electromagnetic Impulse (LEMP) Part 2: Shielding of structures, bonding inside structures and earthing |

11.1.2 Statutory Requirements

a) The Contractor shall ensure that the installation satisfies the requirements of all relevant South African Statutory Regulations

b) Where applicable, equipment items shall carry the SABS mark to demonstrate compliance with the regulations.

11.1.3 The requirements of the materials, design, layout, fabrication, assembly and erection shall, where relevant, be in accordance with the following approved Installation Typicals forming part of this Specification: -

| | |
|---|---|
| Instrument Earthing Schematic | 727/004/Instr_Earth |
| Earthing Concept Drawing | 727/008/Earth_Concept |

## 11.2 Technical Requirements

### 11.2.1 General

a) A common integrated station earthing system shall be provided for electronic and electrical systems equipment, static and lightning protection in accordance with the requirements of this document.

b) A soil resistively survey shall be carried out by a specialist earthing consultant/contractor. The consultant/contractor shall prepare a detailed report on the conditions identified and provide the survey data recordings together with proposals, for a basis of the earthing system design.

c) Major electrical equipment such as switchgear, transformers, lighting boards, floodlight towers on poles, control panels etc. and associated metallic support


Copyright © Transnet Pipelines, All rights reserved, including rights to amendments

frameworks, shall be connected to the station safety earth via Electrical Earth bars located nearby.

Use of embedded conductors within a power cable (spare core earth) may be utilised as the primary equipotential bonding system provided the following conditions are met: (SABS 086-1:2001)

- The embedded conductor has a cross-sectional area equal to those of the live and neutral conductors or equal to the values in Table 1 of SABS 0142)

In addition, a second visual earth connection shall be provided to each item of electrical equipment, to prevent the potential to earth of such equipment rising above spark potential. (SABS 089-2:2000)

d) The neutrals of generators and transformers shall be connected to the main earth grid either directly or via an earthing resistor, as required. Where neutrals of transformers are connected directly to earth, this shall be done via means of connections to both an individual earth rod located nearby as well as to the station earth mat by means of Electrical Earth bar located within the Switchgear Room.

e) Frames of motors shall be connected to the earthing system in accordance with the following table:

| Motors kW Rating | Minimum Earth Conductor Size |
|---|---|
| Up to 30 | 16 $mm^2$ |
| 37 – 132 | 50 $mm^2$ |
| 150 – 175 | 70$mm^2$ |

**Note:**
In order to minimize the number of different sizes of earth conductor, the above three sizes only shall be used throughout, unless specifically stated otherwise.

f) Cables supplying lighting fixtures shall be 3 core for single-phase supplies and 5 core for 3 phase supplies, of which one core shall be used as the earth conductor.

g) Plant Infrastructure such as manifold piping, tanks and metallic support frameworks, shall be connected to the station safety earth, either directly or by means of Electrical earth bars located nearby.

h) Flanged joints in metallic pipelines shall be considered inherently continuous provided the surfaces of one of the bolts are cleaned and identified for earthing. Flanges of metallic pipelines that have insulated linings for purposes other than cathodic protection shall be bonded to ensure electrical continuity.

Pipelines shall only be connected to the earthing system where they enter and leave the battery limits.

i) Storage tanks that are not cathodically protected shall be earthed through at least two separate connections to the tank. Tanks shall be earthed in accordance with the relevant SABS code.

Electrically continuous structural steel columns may be used as down conductors by means of which elevated tanks, vessels, etc. shall be deemed to be connected to the earthing system.


Copyright © Transnet Pipelines, All rights reserved, including rights to amendments

All tank covers, gauge floats and stirrers etc. as well as all pipes entering the tanks shall be earthed.

The steel roof shall be in a direct electrical contact with, or bonded to the tank shell.

Earthed grids, gauges, gratings and the like placed in or across the inlets of tanks are not to be used as a means of static discharge. Individual bonding shall be made to the earthing system.

j) Cable trays and cable racks (including angle iron where used for this purpose) shall have continuous earth continuity. This shall be ensured by installing 10mm$^2$ earth straps across the racking fishplates (joints). Cable Trays shall be connected to the earthing system in two places - where they enter and leave the battery limits.

k) Earthing connections to all equipment and process plant shall comprise of welded earth bosses in compliance with SABS 089 Part II:1965 regulation 5.1.4K with properly provided terminations i.e. 10mm diameter earth studs. Anchor bolts shall not be used.

Earth connections to all equipment shall be effectively bolted, using crimped lugs. All cable connections shall be fitted with a “star” or serrated washer in addition to the backnut, to ensure good earth contact.

l) All earthing connections between the station earth system and respective earth bars/lightning protection systems shall where possible be made above ground, by means of bolts, crimped lugs and PVC taped.

All cable connections shall be fitted with a “star” or serrated washer in addition to the backnut, to ensure good earth contact.

Earth connection points shall be clearly labelled.

In cases where earth connection points are required to be made underground (e.g. to earth rods), inspection wells shall be provided comprising of pre-cast concrete/PVC surrounds complete with covers, to facilitate periodic inspection.

m) Earthing conductors rising through paving or other concrete work shall be run in suitable protective sleeves which shall project above finished level.

n) Earthing and bonding conductors shall be sized and installed in compliance with regulations detailed in the current SAIEE Standard Regulations for the Wiring of Premises and in SABS 03 as applicable.

o) Extendable earthing rods shall be manufactured from stainless / copper clad / galvanized steel (dependant on soil acidity and chlorides and existence of cathodic protection systems) 16mm diameter, 1200 mm long sections, and shall have molecular bond between the two metals to prevent moisture ingress. Where it is necessary to join earth rods together, a non-ferrous corrosion resistant coupling device shall be used which shall prevent the ingress of moisture into the joint.

p) Lightning and static earthing protection shall be provided for all tall steel, masonry and concrete structures, towers, vessels, tanks etc, as well as all buildings used to house sensitive electrical/electronic equipment. Lightning protection systems shall be connected both to individual earth rods as well as bonded to the station earth mat. Where possible, the mesh method (as defined in SABS 0313: 1999 Section


Copyright © Transnet Pipelines, All rights reserved, including rights to amendments

5.2.4) should be utilised in the protection of buildings against lightning strikes i.e. the use of masts and catenary conductors are to be avoided.

Tall steel structures such as towers or structure columns, provided they are electrical continuous, shall be considered inherently protected against lightning by their connection to the earth.

q) **The resistance of the common earthing system to the general mass of earth shall not exceed 1 Ohm.**

r) Where a separate system is installed for other than electrical equipment in remote locations, e.g. storage tanks; its resistance to the general mass of earth shall not exceed 7 Ohms. (Note: This applies only for Lightning Protection and remote valve chambers that are not connected to the Station Earth).

### 11.2.2 Station Safety Earth

In cases where a new Station Safety Earth Mat is required to be provided, the following specifications shall apply:

The **Earth Mat** shall consist of a completely buried, lattice network of 40x3mm, bare copper tape. All the crossover points of the lattice shall be braised or cadwelded and protected with PVC insulation tape. Buried joints or splices shall not be clamped or bolted. The earth mat shall be buried, 1000mm minimum, below finished grade.

The interconnecting conductors shall be radially interconnected to form a common earthing system, for all electrical equipment, lightning protection and static earthing in accordance with relevant SABS requirements.

If required, additional earth electrodes may be installed to achieve the specified resistance, of the common earthing system to the general mass of earth. Where earth rods are paralleled in a group to reduce the earth resistance to the permissible value, they shall be spaced apart for a distance at least equal to their buried depth length.

## 11.3 Switchgear Room Building and Equipment

11.3.1 A Main Safety/Electrical Earth Bar comprising of a copper bar, 50mm x 5mm min shall be installed in the basement/false floor of the Switchgear Room. Where possible, this Earth Bar shall be designated as the Primary Test Point for the station earthing system with the following equipment directly connected:

- **Station Earth Mat**. Where possible, a minimum of four separate connections shall be taken into the Switchgear Room via separate routes from the Earth Mat, by means of 40mm x 3mm Cu Earth tape. Connection to the Main Safety Earth bar shall be made in two places by means of 70mm$^2$, 600-volt class, green colored, PVC insulated, stranded copper conductor, to facilitate testing of the Earth System.
- **Transformers**. By means of 70mm$^2$, 600-volt class, green colored, PVC insulated, stranded copper conductor
- **MV/LV Panels**. By means of dual 70mm$^2$, 600-volt class, green colored, PVC insulated, stranded copper conductors
- **Generator**. By means of 70mm$^2$, 600-volt class, green colored, PVC insulated, stranded copper conductor


Copyright © Transnet Pipelines, All rights reserved, including rights to amendments

- **Instrument Earth**. By means of dual 70mm$^2$, 600-volt class, green colored, PVC insulated, stranded copper conductors
- **Manifold Earth**. By means of dual 70mm$^2$, 600-volt class, green colored, PVC insulated, stranded copper conductors

Note that on existing sites, the earth mat has been connected to the station earthing system in multiple places (namely; the Switchgear Room, Control Room and Manifold), and thus designation of a single Primary Test point is not possible. Multiple test points have thus been defined as follows: Switchgear Room, Control Room and Manifold Mainline Pumps 1 & 4 (where possible).

11.3.2 All secondary earthing within the substation shall be attached to this station earth bar at appropriate demarcated points.

## 11.4 Control Room Building and Equipment

11.4.1 A secondary Safety/Electrical Earth Bar comprising of a copper bar, 50mm x 5mm min shall be installed in the basement/false floor of the Equipment/Control Room in an easily accessible position. Where possible, this Earth Bar shall be directly connected to the Main Safety/Electrical Earth bar located in the Switchgear Room, by means of dual 70mm$^2$, 600-volt class, green colored, PVC insulated, stranded copper conductors.

Note that all marshalling and equipment panels shall have an electrical earth bar, separate from an insulated instrument earth bar, installed and to which all electrical equipment earths shall be connected.

11.4.2 An Instrument Earth Bar comprising of a copper bar, 50mm x 5mm min shall be installed in the basement/false floor of the Equipment/Control Room in an easily accessible position. Where possible, this Earth Bar shall be directly connected to the Main Safety Earth bar located in the Switchgear Room, by means of dual 70mm$^2$, 600-volt class, green colored, PVC insulated, stranded copper conductors.

Note that all marshalling and equipment panels shall have an insulated instrument earth bar, separate from the electrical earth bar, installed and to which all clean/instrument earths shall be connected.

11.4.3 Instrument and Electrical Earth systems shall be clearly labelled.

## 11.5 Manifold Area and Equipment

11.5.1 All manifolds shall have an insulated manifold earthing system installed, comprising of the following specifications:

- 40mm x 3mm min flat copper tape, to run the entire length of the main electrical racking reticulation and supported off of insulators at distances of no more than 2m apart. Use of existing electrical racking reticulation supports shall be permitted. All joints will require to be braised. Earthing reticulation shall be installed in such a manner so as to be unobtrusive and yet accessible and shall be positioned so as to avoid obstruction to walkways and access routes.
- The Manifold Earth bar shall be connected to the main safety/electrical earth located in the Switchgear Room, by means of dual 70mm$^2$, 600-volt class, green colored, PVC insulated, stranded copper conductors.


Copyright © Transnet Pipelines, All rights reserved, including rights to amendments

Note that on existing sites, the earth mat has been connected to the earthing system in multiple places (namely; the Switchgear Room, Control Room and Manifold), and thus designation of a single Primary Test point is not possible. Secondary test points have thus been defined where possible as follows: Switchgear Room, Control Room and Manifold Mainline Pumps 1 & 4.

11.5.2 All process plant and equipment located within the manifold area shall be attached to this manifold earth bar at appropriate demarcated points, via appropriately sized insulated PVC copper cable (green/yellow colored insulation), as follows:

- All electrical equipment shall be earthed via two separate earths, namely via the power cable earth core back to the respective Starter Panel electrical earth bar, and secondly via a separate visual earth from the motor frame to the manifold earth bar. Use of cable armouring as an earth conductor is not acceptable.

- All instrument stands and field junction boxes shall be separately earthed via means of an insulated 16mm2 min PVC copper cabling.

- All process vessels (tanks, vessels and piping) and racking reticulation shall be earthed via insulated 70mm2 min PVC copper cabling in two separate places.

All earth conductors utilized shall comprise of stranded, PVC insulated copper conductors with crimped cable lugs. All connections shall be fitted with a “star” or serrated washer in addition to the backnut, to ensure good earth contact.

## 11.6 Earth System Identification Standards

### 11.6.1 Earth Bar Labels

Earth bars shall be clearly labelled according to their functionality (e.g. “EB xx” to denote an electrical earth bar, “IB xx” to denote an instrument earth bar, where xx denotes a unique consecutive number). The Functional Identifier “EB 00” shall always denote the Station Earth Mat.

In addition, earth bars designated as Test Points shall be labelled accordingly.

Labels shall comprise of the Traffolyte engraved type, and fixed by means of stainless steel screws. Finish shall comprise of black letters against a white background, with text 40mm height.

Labels shall be readable/visible after the wiring has been done.

### 11.6.2 Earth cable Identification

Earth cables may be divided into two types, namely primary earth cabling running from subsystem earth bars directly or indirectly to the main station earth (and used for testing purposes), and secondary earth cabling running between the subsystem earth bars and equipment or infrastructure.

Only Primary earth cabling (i.e. those used for testing purposes) is required to be identified, by means of a Functional Identifier denoting both source and destination earth bars.

Identification numbers will comprise of the following specification:


Copyright © Transnet Pipelines, All rights reserved, including rights to amendments

- Grafoplast Targa Metal TGT System (Carrier Rail 58mm in length) 316 Stainless Steel Markers, with punched text 6 mm height minimum, fastened onto the cable at both ends via means of Stainless Steel cable ties

Examples:

| | |
|---|---|
| EB01 – EB00 | Cable Identifier for Earth cable running between Electrical Earth bar EB01 and the Station Earth Mat |
| IB01 – EB00 | Cable Identifier for Earth cable running between Instrument Earth bar IB01 and the Station Earth Mat |

## 11.7 Testing

11.7.1 Earth Resistivity and Electrode Testing

It will be the Contractors responsibility to carry out all necessary earth resistivity tests on site, where applicable. Tests will be in accordance with the requirements of BS 1013 as amended.

After all earth electrodes/trench earth's have been installed, an earth megger shall be used to test the earth resistance at the earth bar or connection point to the main station earth and the results recorded. Note that all ECC connections, and any other bonding material shall be disconnected from the earth connection point whilst the earth is being tested.

Earth Continuity Testing.

Earth continuity readings shall be measured and recorded from the earth bar to each item of equipment and process plant, and shall include all piping, vessels, transformers, motors, actuators, switchgear cabinets, marshalling enclosures and instrumentation.

11.7.2 The following are the maximum acceptable earth electrode resistances:

Electrical Earth
a) Main substation - 1 ohm
b) Miniature substations and kiosks - 2 ohms
c) Highmasts - 5 ohms.

Instrument Earth
a) Instrument Earth - < 1 ohm

---------- End of Document ----------


Copyright © Transnet Pipelines, All rights reserved, including rights to amendments

# APPENDICES

## A1. Drawings.

| | |
|---|---|
| Cable Marker Specification | 727/001/cblmrk |
| Typical for Instrument Stands - double | 727/002/Instand |
| Typical for Instrument Stands - single | 727/003/Instand |
| Instrument Earthing Schematic | 727/004/Earth_Instr |
| Typical Instrument Loop Drawing | 727/005/InstrLoop |
| Typical Valve Loop Drawing | 727/006/VlvLoop |
| Typical for Angle Iron Droppers | 727/007/Rack_Droppers |
| Earthing Concept Drawing | 727/008/Earth_Concept |
| Typical for Racking Layouts incl. over Bund Walls | 727/009/Rack_Typical |
| Typical for Junction Box stands | 727/010/Junction Box Stand |


Copyright © Transnet Pipelines, All rights reserved, including rights to amendments

# A2. FIBRE OPTIC INFRASTRUCTURE IDENTIFICATION STANDARDS – TYPICAL DRAWINGS

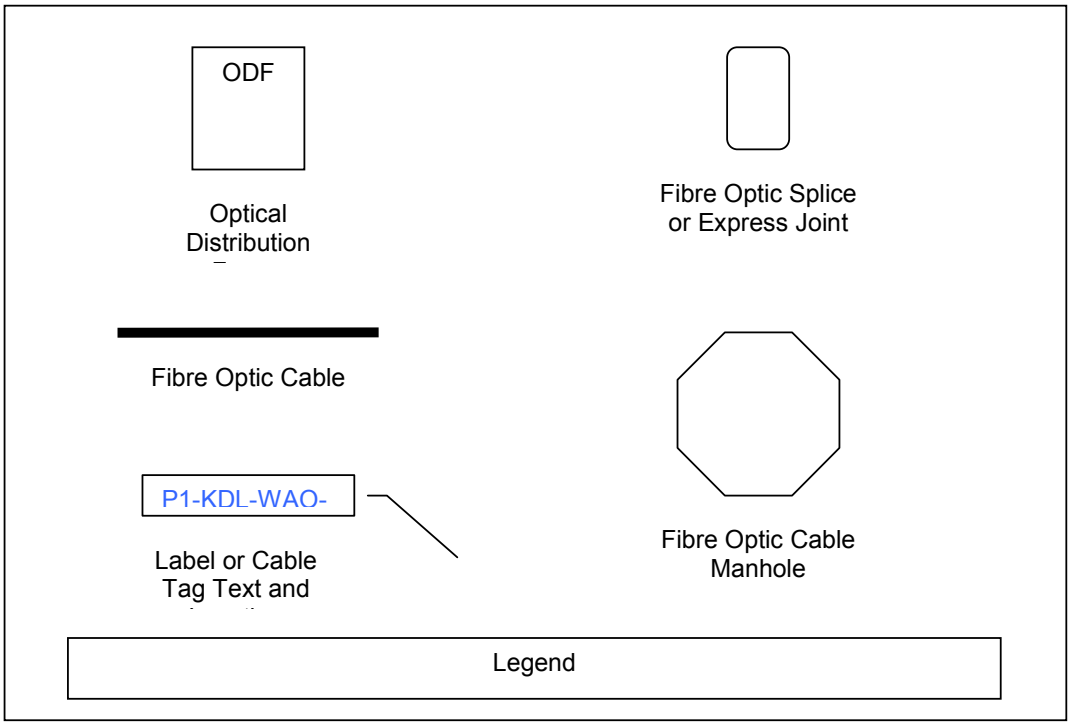



Copyright © Transnet Pipelines, All rights reserved, including rights to amendments

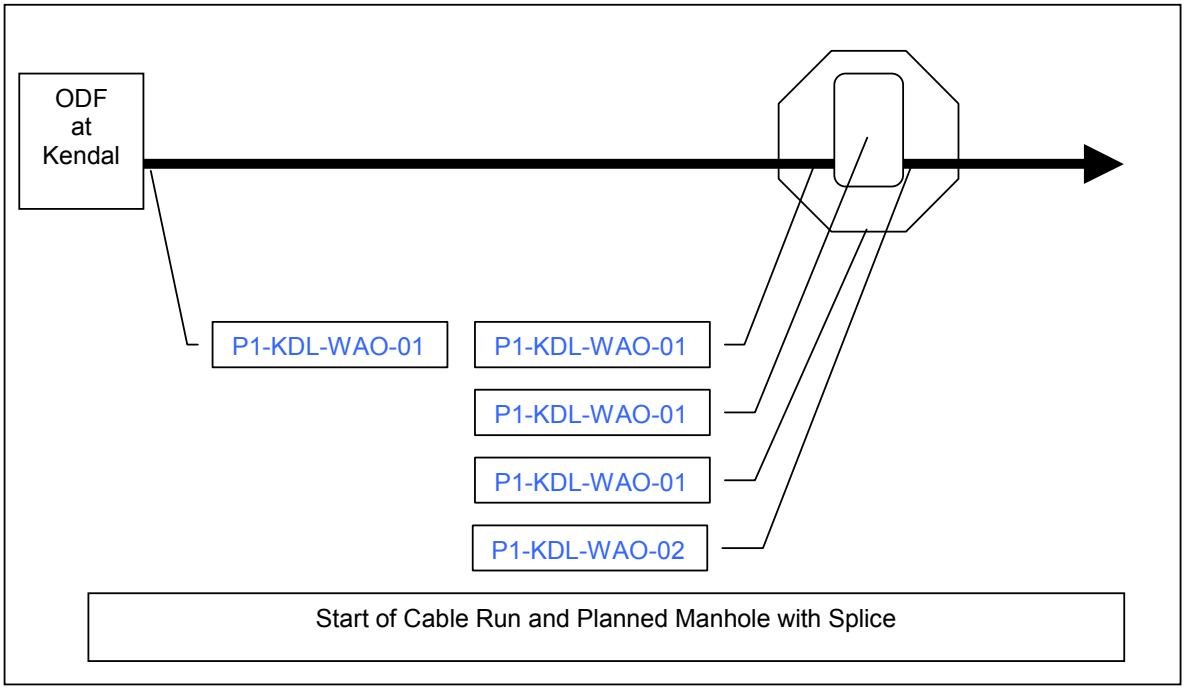


Start of Cable Run and Planned Manhole with Splice

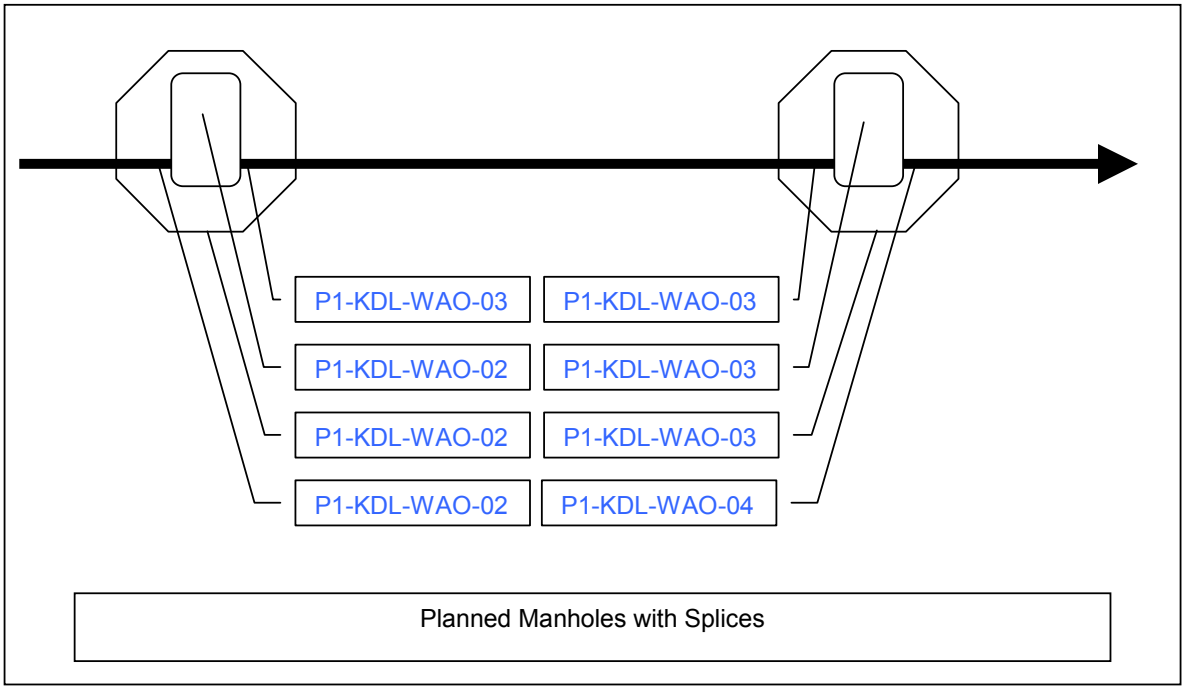


Planned Manholes with Splices


Copyright © Transnet Pipelines, All rights reserved, including rights to amendments

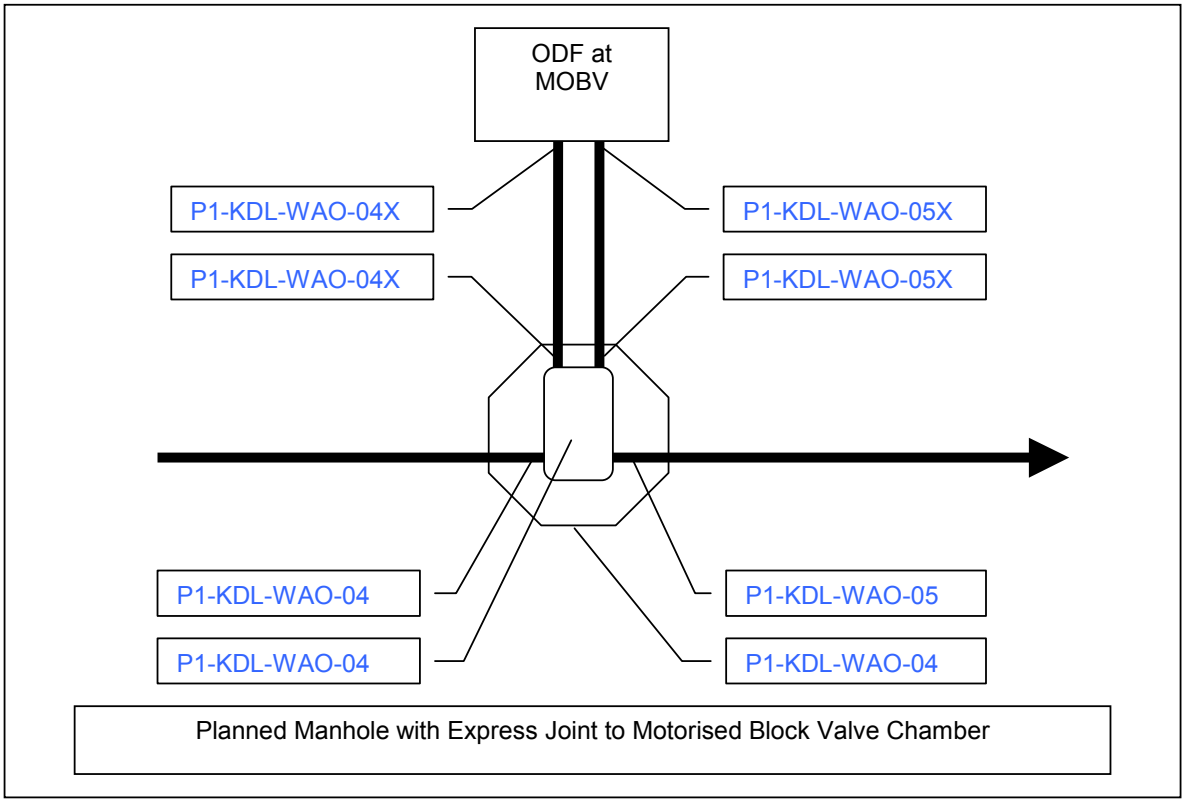



Copyright © Transnet Pipelines, All rights reserved, including rights to amendments

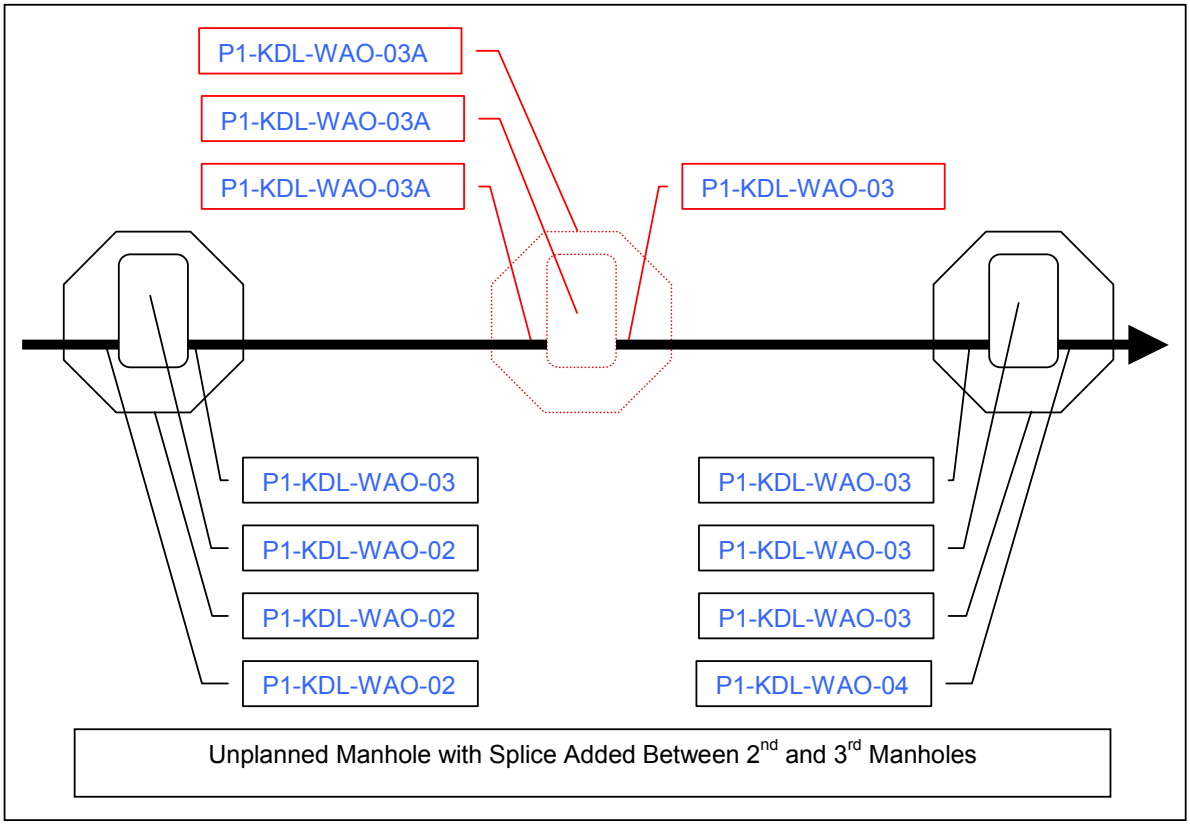


Unplanned Manhole with Splice Added Between 2nd and 3rd Manholes


Copyright © Transnet Pipelines, All rights reserved, including rights to amendments

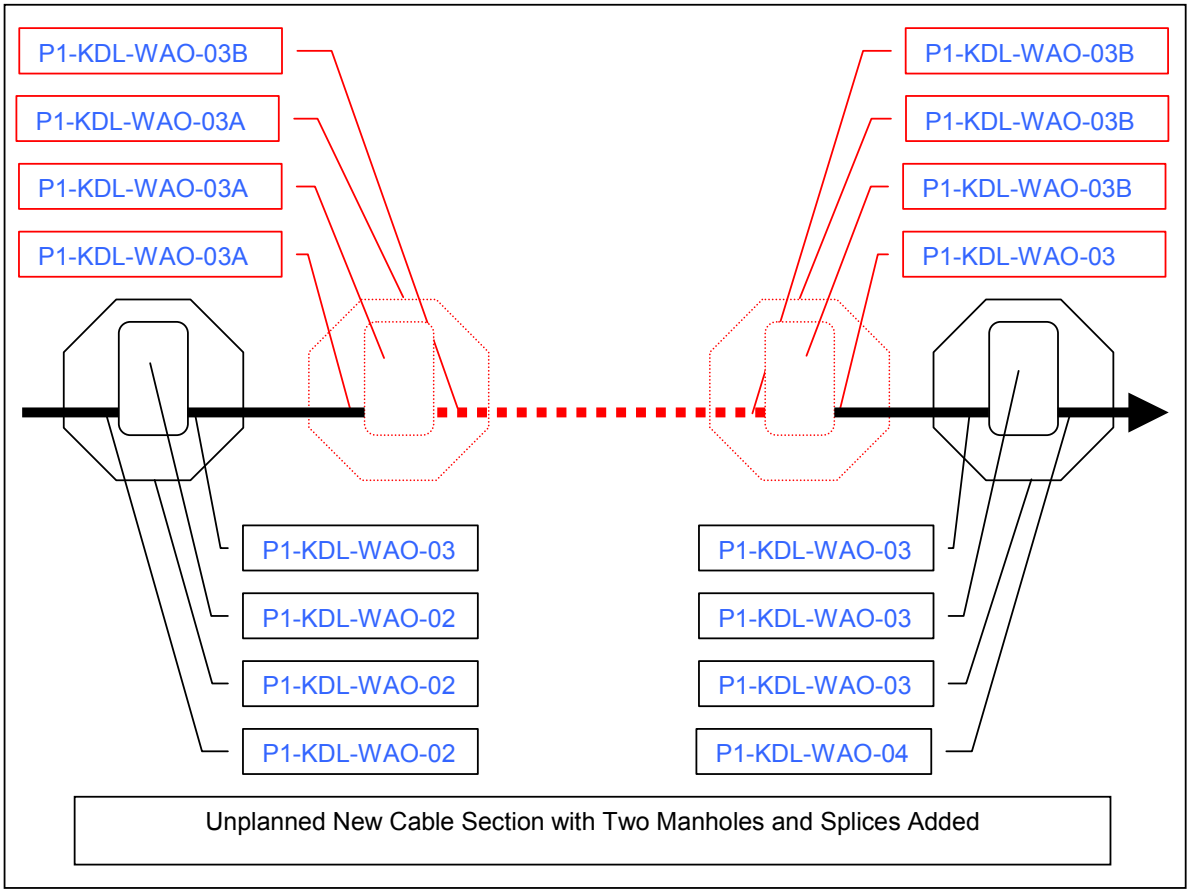


Unplanned New Cable Section with Two Manholes and Splices Added


Copyright © Transnet Pipelines, All rights reserved, including rights to amendments

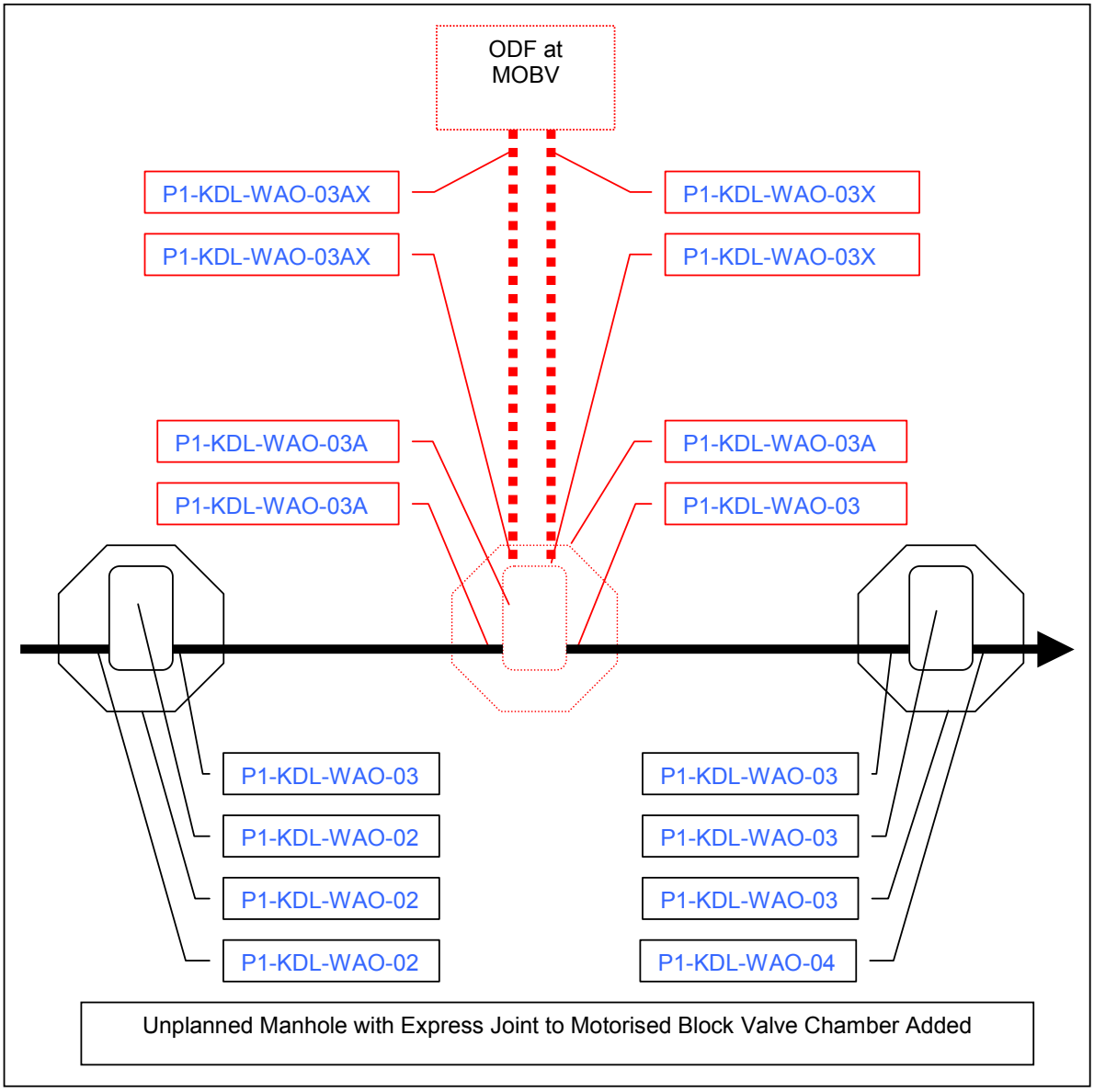



Copyright © Transnet Pipelines, All rights reserved, including rights to amendments

# SPECIFICATION FOR SUBSTATION BATTER CHARGER – 110VDC

This specification has been revised as indicated below and described in the revision record on the following page. Please destroy all previous revisions.

| Revision No. | Date | Originator's Name & Initials | Reviewed/Checked By Name & Initials | Pages |
|---|---|---|---|---|
| 1A | 05/05/2006 | T. Sparkes | D. Taylor | Various |
| 1B | 02/08/2006 | D. Taylor | T. Sparkes | Various |
| 2 | 18/09/2006 | D. Nel | D. Taylor | All |
| | | | | |
| | | | | |
| | | | | |

| APPROVALS | | SIGNATURES | DATE |
|---|---|---|---|
| Lead Engineer: | D Taylor | | 07/12/06 |
| Project Engineer: | M. Nurse | | 18.12.06 |
| Client Representative: | B Burnean | | 12/12/06 |

**ISSUED FOR :** [X] Design [ ] Construction [ ] Other _____

**SPECIFICATION FOR SUBSTATION BATTER CHARGER – 110VDC**

# Record of Revisions

| Rev. No. | Date | Description |
|---|---|---|
| 1A | 05/05/2006 | Petronet specification reviewed and updated during NMPP Project – Early Feasibility Phase. |
| 1B | 02/08/2006 | Petronet specification updated during NMPP Project – Preliminary Design Phase and re-issued for approvals. |
| 2 | 18/09/2006 | Issued for design – NMPP Project |
| | | |
| | | |
| | | |

# SPECIFICATION PL 647

## BATTERY CHARGER SPECIFICATION

# THIS SPECIFICATION COVERS PETRONET'S REQUIREMENTS FOR THE SUPPLY OF 110V DC BATTERY CHARGERS

## REVISION: 2


Copyright © Petronet, All rights reserved, including rights to amendments

# TABLE OF CONTENTS


**1. GENERAL ..... 3**

1.1. SCOPE ..... 3
1.2. REFERENCES ..... 3
1.3. SOUTH AFRICAN BUREAU OF STANDARDS ..... 3
1.4. SUBMITTALS ..... 4
1.5. QUALITY ASSURANCE ..... 4
1.6. PRODUCT DELIVERY AND HANDLING ..... 4
1.7. SERVICE CONDITIONS ..... 4

**2. TECHNICAL REQUIREMENTS ..... 4**

2.1. GENERAL ..... 4

**3. BATTERIES ..... 5**

3.1. OPERATING DUTY AND RATING ..... 5
3.2. GENERAL CONSTRUCTION ..... 5
3.3. SEALED ("MAINTENANCE FREE") LEAD-CALCIUM BATTERY ..... 5
3.4. BATTERY ACCESSORIES ..... 6
3.5. BATTERY RACK ..... 6

**4. BATTERY CHARGER ..... 6**

4.1. GENERAL CONSTRUCTION ..... 6
4.2. BATTERY CHARGER SIZING CRITERIA ..... 7
4.3. DESIGN ..... 7
4.4. BATTERY CHARGER ACCESSORIES ..... 7
4.5. BATTERY CHARGER PROTECTION AND ALARMS ..... 8
4.6. FINISH ..... 8
4.7. NAMEPLATES ..... 8

**5. ENGINEERING DELIVERABLES ..... 9**

5.1. DRAWING REQUIREMENTS ..... 9
5.2. SPARE PARTS LIST ..... 9
5.3. MATERIAL LIST ..... 9
5.4. INSTALLATION, OPERATING AND MAINTENANCE MANUALS ..... 9

**6. INSPECTIONS AND TESTS ..... 9**

6.1. FACTORY INSPECTION AND TESTS ..... 9
6.2. FIELD CHECKOUT AND TESTING ..... 10

**7. PREPARATION FOR SHIPMENT ..... 10**

**8. GUARANTEE ..... 10**

**9. GENERAL ..... 10**



Copyright © Petronet, All rights reserved, including rights to amendments

# 1. GENERAL

## 1.1. Scope

1.1.1. This specification prescribes the general requirements for batteries, battery supports, and battery chargers for the supply of dc power for the tripping of medium voltage switchgear.

1.1.2. The specific requirements of each battery charger and battery bank; i.e. ac input voltage, normal loads, emergency loads and circuit-breaker operating requirements; shall be as given on the detailed individual datasheets which shall form part of the contract documentation.

1.1.3. CONTRACTOR shall furnish any special tools for installation and maintenance.

1.1.4. The intent of this specification is to properly specify equipment that not only meets applicable safety standards, but shall also perform reliably in the specified environment with reasonable life expectancy, (defined as 10 years for the charger and 4 years for the batteries). Any accessory, fabrication method, and operational methods not specified herein, but recommended for safe and satisfactory performance of the equipment, shall be brought to the attention of the COMPANY.

1.1.5. This document will not completely specify the details of the equipment and services in the CONTRACTOR's scope of supply. CONTRACTORS are invited to make recommendations with justification, any options available that can be beneficial in considering cost performance, maintainability and quality. The COMPANY in the evaluation of suitability and benefits offered shall consider such options.

1.1.6. Petronet will prefer battery charger units as supplied by Blueginger, Static Power or similar.

## 1.2. References

1.2.1. The publications listed below form part of this specification. Each publication shall be the latest revision and addendum in effect on the date this specification is issued for construction, unless noted otherwise. Except as modified by the requirements specified herein, or the details of the drawings, work included in this specification shall conform to the applicable provisions of these publications.

- **SANS 1652** Battery charger – Industrial type, (2004).
- **SANS 1632** Batteries. Parts: 1 (2005), 2 (2005), 3 (2005).
- **SANS 1474** Uninterruptible power systems, (2004).
- **SANS 60529** Degrees of protection provided by enclosures (IP Code), (2001).
- **SANS 60896** **Stationary lead-acid batteries. Part 11 (2003), 21 (2004), 22 (2004).**

1.2.2. In addition to the requirements of this specification, battery chargers and batteries shall also comply with the mandatory requirements of The Occupational Health and Safety Act of the Republic of South Africa (Act No 85 of 1993).

1.2.3. The order of precedence of documents, standards and specifications is as follows:

- PO / Contract documents
- Individual datasheets
- This specification
- Specification and Standards listed in Section 1.2 – References

## 1.3. South African National Standards

1.3.1. CONTRACTOR shall ensure that the equipment satisfies the requirements of all relevant SANS specifications and codes of practice.


Copyright © Petronet, All rights reserved, including rights to amendments

1.3.2. Where applicable, equipment items shall carry the SANS mark to demonstrate compliance with the directives. Copies of the manufacturer's SANS 'Declaration of Conformity' certificates and test reports shall be provided with the bid.

1.3.3. CONTRACTOR may at his discretion, elect to provide SANS marking of the complete equipment assembly. In this case, the CONTRACTOR shall describe, in the bid, the procedure to be followed and / or details of the documentary evidence that will be provided for each component item of the complete assembly, which is necessary to demonstrate compliance with the relevant directives / regulations.

### 1.4. Submittals

1.4.1. CONTRACTOR shall submit documents for review and shall furnish final certified copies of all documents.

1.4.2. Manufacturers type test certificates shall be submitted with equipment test reports.

### 1.5. Quality Assurance

1.5.1. CONTRACTOR shall bring to the COMPANY's attention any discrepancy found in this specification. No deviations shall be made without prior written authorisation from the COMPANY.

1.5.2. Equipment shall be built under a strict quality assurance programme and shall have a guaranteed lifetime of at least 15 years.

### 1.6. Product Delivery and Handling

1.6.1. Packaging and delivery requirements shall be as specified in the attachments to the contract.

1.6.2. Equipment shall as a minimum be protected from mechanical damage, ingress of dust, dirt and water during transportation and storage on site.

1.6.3. The equipment shall be provided with lifting angles, plates or devices suitable for hooks and slings, as necessary.

1.6.4. Quantities of touch-up paint shall be provided to repair painted finishes at site.

1.6.5. CONTRACTOR shall prepare and deliver the required drawings and instruction manuals with the equipment. Items to be shipped loose shall be approved by the COMPANY. Loose items for field installation shall be tagged and shall include assembly instructions.

### 1.7. Service Conditions

1.7.1. Battery charger and batteries shall be suitable for mounting indoors. Ambient conditions are as follows:

- Temperature ranges between –10 $^{o}$C and 40 $^{o}$C.
- Relative Humidity of up to 98%.
- Altitude ranges up to 1800 meters above sea level.

## 2. TECHNICAL REQUIREMENTS

### 2.1. General

2.1.1. The system shall consist of a battery bank complete with inter-cell connectors and hardware, a battery rack, and a charger as described in the datasheets.


Copyright © Petronet, All rights reserved, including rights to amendments

## 3. BATTERIES

### 3.1. Operating Duty and Rating

3.1.1. During normal operation, the battery shall be "floating" on the line with the battery charger connected. The normal steady state loads shall be specified on the datasheets.

3.1.2. The battery shall have a minimum capacity of 120 Ah at 110 V DC.

### 3.2. General Construction

3.2.1. The battery bank shall be designed for floating service under normal operation with a periodic equalise / boost charge from a connected battery charger.

3.2.2. The battery bank shall consist of sealed "maintenance free" lead-calcium cells as specified on the datasheets.

3.2.3. The battery bank shall have a life expectancy and prorated warranty of the duration indicated on the datasheets.

3.2.4. The cell containers and covers shall be moulded of a material that is resistant to heat, shock, and chemical attack. The cell cover shall be permanently affixed to the container to form a permanent leak-proof seal. Covers shall be equipped with explosion resistant, flame arresting vent caps. Electrolyte level lines shall be marked on all four sides of the container.

3.2.5. Sediment space shall be provided in each cell so that it shall not require any cleaning during its life.

3.2.6. Terminal posts shall be sized to carry the related current, but sealed against creepage of electrolyte and equipped with bolts for inter-cell connection. Posts, bolts and associated hardware shall be manufactured of material resistant to the corrosive action of the electrolyte.

3.2.7. The cells shall be shipped filled with electrolyte and charged when manufactured in South Africa, but shall be shipped dry and sealed (in dry state charge) to be filled with acid on site, if manufactured outside of South Africa.

3.2.8. Inter-cell connectors and insulated inter-tier jumpers shall be supplied to provide a 15 mm spacing between cell or units for each battery bank. Inter-cell connectors shall be of a suitable material for the supplied batteries. Stainless steel bolts, washers, and nuts shall be provided for high torque low resistance terminations.

3.2.9. The battery shall be delivered, installed and commissioned on site and then subjected to a capacity test in accordance with Section 13 of SANS IEC 60896 as an acceptance test. The CONTRACTOR, with the assistance of the equipment Manufacturer shall carry out the site testing and commissioning.

### 3.3. Sealed (“Maintenance Free”) Lead-Calcium Battery

3.3.1. The battery cell shall be of either the Faure (pasted plate) or tubular plate design unless specifically indicated on the datasheets. Plate design shall employ lead-calcium grids.

3.3.2. The battery cell shall be recombinant sealed maintenance free type with positive limited plate groups operating in the oxygen cycle. Battery cells shall be non-gassing so that ventilation or special battery rooms are not required.

3.3.3. The electrolyte shall be either gelled type or liquid immobilised by absorbent plate separators.


Copyright © Petronet, All rights reserved, including rights to amendments

### 3.4. Battery Accessories

3.4.1. The CONTRACTOR shall recommend the make up of a “battery accessory set” containing the equipment required for the maintenance and testing of the batteries. One “battery accessory set” shall be supplied with each battery set.

3.4.2. The ‘battery accessory set” shall as a minimum include the following maintenance accessories:

- Cell numbers and warning labels
- 1 x cell lifting device
- 1 x container and no-oxide grease
- Load tester capable of drawing 50% of full load (variable).

### 3.5. Battery Rack

3.5.1. A battery rack shall be furnished for each battery set, and shall be as described below and indicated on the datasheets.

3.5.2. Battery racks shall be constructed from steel, and coated with a material that resists the corrosive effects of spilled electrolyte. Trays of corrosion resistant plastic shall be provided under each rack to contain electrolyte spillage or leakage.

3.5.3. Vented batteries shall not be stacked in tiers one above the other, but in stepped arrangements for ease of maintenance. The height of the rack plus the batteries shall not exceed 1200mm.

## 4. BATTERY CHARGER

### 4.1. General Construction

4.1.1. The charger shall be self cooled and completely assembled and wired in a free-standing enclosure. The enclosure shall be constructed such that it affords a degree of protection of at least IP 42 in accordance with the requirements of SANS 60529.

4.1.2. The cabinet shall be arranged for front operation and maintenance. Removable side panels may be provided, but rear access shall not be required. Provision shall be made for opening the enclosure to allow service access to all components, without having to dismantle any of the circuitry or de-energising the battery charger.

4.1.3. It shall not be possible to remove, open or withdraw any door, casing, lid, cover or similar components, (for purpose of adjustments, maintenance or repairs), without the use of keys or tool.

4.1.4. A fused isolator switch shall be provided on the input to the battery charger.

4.1.5. A MCB shall be provided in the connection from the battery charger output to the battery terminals to protect the battery against external short circuits; and shall be mounted within the charger enclosure.

4.1.6. Battery charger shall be equipped with auxiliary contacts for remote alarming of the following conditions:

- Battery Charger Fail

4.1.7. The metal used for the enclosure and its parts, (i.e. doors, casing, lid covers) shall be rigid and of such a thickness as to provide sufficient strength. Metal surfaces shall be protected against corrosion.

4.1.8. The cabinet shall be constructed so as to permit cable / conduit entrance from both the top and bottom of the cabinet


Copyright © Petronet, All rights reserved, including rights to amendments

4.1.9. All bolts, nuts, screws and washers used in the construction of the cabinet, shall be of an intrinsically corrosion resistant metal or shall have been so treated as to render them resistant to corrosion.

4.1.10. All doors carrying any live conductors shall be earthed.

4.1.11. Lifting means, such as removable lifting devices, facilities for forklift handling or other means, shall be provided for easy handling and transporting of the battery charger, unless the mass is smaller the 20 kg.

### 4.2. Battery Charger Sizing Criteria

4.2.1. The battery charger shall be sized to charge a totally discharged battery set to 80 % of full capacity within 10 hours.

4.2.2. If required, the charger shall be derated for ambient temperature and altitude.

### 4.3. Design

4.3.1. The battery chargers shall be of a simple, non-electronic design. A MCB shall protect the primary side of the step-down transformer. The secondary side of the transformer shall supply a simple diode rectifier. A choke shall be incorporated between the load and rectifier to limit the charging current. A volt sensing relay shall be installed on the output side of the choke.

4.3.2. Input and output power circuits shall have overcurrent protection, in the form of thermal-magnetic type circuit breakers. Breakers shall be capable of being manually operated with door closed.

4.3.3. The charger shall be capable of maintaining an output voltage within ± 1 % of the DC float voltage and ± 3 % the equalisation voltage under all load conditions, with an input variation of ± 10 % in voltage and ± 5 % in frequency.

4.3.4. Ripple in the battery charger output shall not exceed 1 % of nominal voltage for all values of load within the charger rating.

4.3.5. The battery charger shall have a minimum efficiency of 90 % at rated load.

4.3.6. The battery charger shall be equipped with a choke to limit load current under discharged battery conditions.

4.3.7. The rating of the battery charger shall be 10 Amps, (minimum).

### 4.4. Battery Charger Accessories

4.4.1. The battery charger shall be equipped with the following precision measuring and indicating instrumentation, preferably of the digital metering type:

- AC input voltmeter for the charger (accuracy of +/- 2 % of full scale)
- DC output voltmeter for the charger (accuracy of +/- 2 % of full scale)
- DC output ammeter for the charger (accuracy of +/- 2 % of full scale)
- Battery load current and direction of flow

4.4.2. The battery charger shall be equipped with the following accessories:

- Indicating lights: Power on, Float charging

4.4.3. The battery charger shall be equipped with 5 sets of positive load and negative load terminals, sized to accommodate 16mm$^2$ cable


Copyright © Petronet, All rights reserved, including rights to amendments

### 4.5. Battery Charger Protection and Alarms

4.5.1. The battery charger shall be equipped with the following alarm contacts for remote indication:

- Loss of input voltage to charger
- A charger failure alarm
- A DC under-voltage alarm (loss of voltage).

4.5.2. The ground fault alarm shall be initiated via two earth fault detection relays on negative-to-earth or positive-to-earth faults. The wiring of this device shall include permanently installed removable links to permit it to be disabled with ease should the charger be employed on an earthed dc distribution system.

4.5.3. All alarms shall be of a latching type with a manual reset and a common alarm output.

4.5.4. MCB trip indication and alarms shall be provided to monitor the status of diode protection and facilitate maintenance work.

4.5.5. Alarm conditions are to be identified individually on an LED type visual display located on the battery charger control panel.

4.5.6. All alarm relays shall be fitted with an additional normally closed (fail-safe) voltage-free contact for use with a remote monitoring facility. These contacts shall be wired to a terminal strip on the charger control panel for connection by cable to the remote monitor.

### 4.6. Finish

4.6.1. The cabinet shall be cleaned and primed as follows:

- Primer- Single pack high build vinyl matt primer red oxide colour. Dry film thickness shall be 65 μm per coat.
- Intermediate coat – Light admiralty grey, semi-gloss single pack high build vinyl. Dry film thickness shall be 50μm to 70μm per coat.
- Finish coat – Dark Blue / Grey or as otherwise specified, semi-gloss single pack vinyl enamel. Dry film thickness shall be 25 μm to 35 μm.

### 4.7. Nameplates

4.7.1. Each charger shall have its own identification nameplate indicating the equipment name and number; this nameplate shall be mounted at the top centre of the unit or in a prominent location.

4.7.2. Permanent nameplates shall be supplied to identify each voltmeter, ammeter, switch, timer, rheostat, relay, and other major components.

4.7.3. Nameplates shall be laminated plastic. Characters shall be black on a white background or as otherwise specified. All wording shall be in the English language.


Copyright © Petronet, All rights reserved, including rights to amendments

## 5. ENGINEERING DELIVERABLES

### 5.1. Drawing Requirements

5.1.1. Typical drawings are not acceptable unless they are revised to show only the equipment furnished.

5.1.2. Reproducible drawings for approval shall be supplied as follows:

- Plan and elevation drawings of the equipment indicating outline dimensions, mass, space for cable or conduit entrance, terminal locations and minimum recommended clearances.
- Elementary (schematic) diagrams indicating all control devices and device contacts, and all device and terminal block terminal numbers. (To component level for re-ordering of integrated circuits)
- Connection (wiring) diagrams indicating all interconnecting wiring and the approximate physical location of all devices in the assembly. All terminal blocks and wires shall be clearly labeled.
- Printed circuit board layout and schematic diagrams and manuals indicating test point voltages and / or signals.

### 5.2. Spare Parts List

5.2.1. Complete spare parts list, including parts location diagram or drawings, and prices that the Manufacturer recommends for the first two year's of operation shall be submitted on the SPIR (Spare Parts and Interchangeability Record) form attached with the contract documentation.

### 5.3. Material List

5.3.1. A material list giving the quantity, type, rating, and Manufacturers catalogue number of all items in each assembly.

### 5.4. Installation, Operating and Maintenance Manuals

5.4.1. Installation, operating and maintenance instructions, which cover all the equipment furnished, shall be provided.

## 6. INSPECTIONS AND TESTS

### 6.1. Factory Inspection and Tests

6.1.1. The COMPANY, prior to shipment, shall inspect the batteries and battery charger at the manufacturing plant.

6.1.2. The inspection shall consist of physical check for completeness and conformance to specifications, and operational tests as required.

6.1.3. Factory tests shall include all the Manufacture's routine tests and all additional tests specified in the datasheets. The Engineer shall witness all tests. Where the Manufacturer already has type test certificates, representative of the equipment he has offered he shall submit copies of these together with his tender documentation.


Copyright © Petronet, All rights reserved, including rights to amendments

### 6.2. Field Checkout and Testing

6.2.1. In addition to any factory inspection and witnessed tests which may have been carried out at the Manufacturer's plant on the equipment, all equipment and material shall be inspected immediately after receipt at the job-site.

6.2.2. On completion of the installation of all equipment and materials on site and prior to commissioning, all electrical equipment and systems shall be checked out and tested in strict accordance with the requirements for the project.

6.2.3. The CONTRACTOR shall include the price extra in his/her bid for commissioning of the battery charger and assembly and commissioning of the battery on site. This shall include the carrying out of the initial charging of the battery and a battery capacity test witnessed by the Engineer.

## 7. PREPARATION FOR SHIPMENT

7.1.1. Preparation for shipment shall be as noted in the contract documentation. The Manufacturer shall be solely responsible for the adequacy of the preparation for shipment. The COMPANY reserves the right to inspect and approve the equipment packaging before shipment.

## 8. GUARANTEE

8.1.1. A written guarantee of 12 months is required on all workmanship and equipment supplied by the contractor.

## 9. GENERAL

9.1.1. During the tendering stage the tenderer shall indicate that his/her tender complies in every respect with this Specification, if not, precisely how it differs from this Specification.

## 10. AS WITNESSES

1. _____ _____
CONTRACTOR

2. _____ DATE: _____

## 11. AS WITNESSES

1. _____ _____
CHIEF EXECUTIVE (PETRONET)

2. _____ DATE: _____


Copyright © Petronet, All rights reserved, including rights to amendments

# SPECIFICATION FOR SUBSTATION BATTERY CHARGER 110VDC

DATE: REV:

| SUBSTATION: BUILDING: EQUIPMENT TAG NO.: | Initial / Date |
|---|---|
| **Note!!!** When batteries are placed in service while work is still being performed around them, protection should be provided. Metal objects laid or dropped on them could cause a short or an explosion. Tarpaulin, plastic or similar material, should not be used because batteries in service require ventilation. | |
| 6 | |
| 1. Receiving Operations / Inspection complete. | |
| 2. Equipment Protection Program instituted and documented. | |
| 3. Batteries and racks installed and checked for proper mechanical installation, including connections and number of cells. | |
| 4. Batteries filled with electrolyte to proper level and charged in accordance with manufacturer's recommendations. | |
| 5. Lead acid batteries checked with hydrometer for correct specific gravity, in accordance with manufacturer's specifications. | |
| 6. Grounding / earthing connection checked. Record readings on Test Record Form: 000.265.F1109: Ground Continuity Test Record (Electrical Equipment and Ground Test Bars). | |
| 7. Battery charger checked for proper installation, wiring complete and properly connected. | |
| 8. Charger operates in accordance with manufacturer's recommendations. Current output, voltage, and operation of control components checked. | |
| 9. Check charger nameplate against approved supplier drawings. | |
| 10. Accessory equipment such as: hydrometer, thermometer, special wrenches, and spare electrolyte accounted for. | |
| 11. Batteries, battery racks, and charger cleaned. Terminals and interconnectors covered with protective base. | |
| 12. Test charger for maximum rated output and correct operation, as required by Project specifications. | |
| 13. Booster charge in accordance with manufacturer's instructions. | |
| 14. Set charger for float operation with adjustment of proper float voltage. | |
| 15. Charger marked with float and boost charge voltage limits. | |
| 16. Verify proper operation of low DC voltage relay and alarm contacts. Indicate limits. | |
| 17. Verify proper operation of AC failure relay and alarm contacts. | |
| 18. Verify ground detection relay or lights operate properly. Verify alarm output relays operate. | |
| 19. Voltmeters checked, zeroed. | |
| 20. Ammeters checked, zeroed. | |
| 21. Fuses and circuit breakers in accordance with supplier drawings. | |
| 22. Verify operation of charger output failure relay and alarm contacts. | |
| 23. Supplier Representative provided service / supervision for this equipment. Supplier test reports attached to this inspection record. | |
| 24. Equipment Protection Program completed and documented. | |
| 25. Final inspection complete. Punch items on Form: 000.265.F1300: Electrical Punch List Record. | |

**Distribution:**

**Contractor / Date:**

# SPECIFICATION FOR SUBSTATION BATTERY CHARGER

| | | | |
|---|---|---|---|
| DATE: | | | REV.: |
| CONTRACT NO.: | PO NO.: | BY: | REVIEWED: |
| SPECIFICATION NO.: | | DATASHEET NO.: | DATE OF INSPECTION: |
| SUPPLIER: | | SHOP ORDER: | |
| VOLTAGE: | | INSPECTOR: | |

**Note!!!** Record all defects, missing parts, and action taken to correct.

| Item No. | A. Visual Inspection | Serial / Tag No. | | | |
|---|---|---|---|---|---|
| | | | | | |
| 1 | **Cabinet**<br>Type of Cabinet - Indoor and Outdoor<br>Mounting - Wall, Floor, and Rack<br>Mounting Hardware or Provisions<br>Cabinet Dimensions<br>Conduit Openings<br>Ground Lugs<br>Paint Finish | | | | |
| 2 | **Nameplate Ratings**<br>AC Input Volts, Phases, and Hertz<br>AC Input Amps<br>DC Output Volts<br>DC Output Amps<br>Application (Type and Number of Battery Cells) | | | | |
| 3 | **Instruments and Controls**<br>DC Voltmeter (Charger)<br>DC Ammeter (Charger)<br>Float Adjustment Rheostat<br>Equalizing Adjustment Rheostat<br>Float - Equalize Selector Switch | | | | |
| 4 | **Optional Accessories**<br>Battery Ammeter (On Shunt Box)<br>Load Ammeter (On Shunt Box)<br>Battery Voltmeter<br>Ground Voltmeter<br>AC Pilot Light<br>Equalizing Charge Timer<br>Equalizing Pilot Light<br>AC Failure Alarm Contacts<br>Low DC Alarm Contacts<br>High DC Alarm Contacts<br>Time Delay Relays on Alarms<br>Circuit Breaker Protection for Input and Output (Instead of Fuses)<br>Customer Terminals | | | | |

# SPECIFICATION FOR SUBSTATION BATTERY CHARGER

| Item No. | B.. Tests | Serial / Tag No. | | | |
|---|---|---|---|---|---|
| | | | | | |
| 1 | **Use Manufacturer's Standard Test Procedures to Test at Least the Following:**<br>Maximum Equalizing Voltage at Full Load Current<br>Maximum Float Voltage at Full Load Current<br>Float Voltage at 50% Load Current<br>Equalizing Voltage at 50% Load Current<br>DC Output Voltage Regulation for 90 - 100% AC Input Voltage Variation (Should be Less than 1%)<br>Current Limit Adjustment<br>Short Circuit Test<br>Ground Detection System<br>Alarms<br>Meters<br>Pilot Lights<br>Equalizing Charge Timer | | | | |

The following standards refer to the testing of this equipment:

- UL 1236-86
- UL 1564-83

## SPECIFICATION FOR SUBSTATION BATTERY CHARGER – 50VDC

This specification has been revised as indicated below and described in the revision record on the following page. Please destroy all previous revisions.

| Revision No. | Date | Originator's Name & Initials | Reviewed/Checked By Name & Initials | Pages |
|---|---|---|---|---|
| 1A | 05/05/2006 | T. Sparkes | D. Taylor | Various |
| 1B | 10/08/2006 | D. Taylor | T. Sparkes | Various |
| 2 | 14/09/2006 | D. Nel | D. Taylor | Various |
| | | | | |
| | | | | |
| | | | | |

| **APPROVALS** | | **SIGNATURES** | **DATE** |
|---|---|---|---|
| Lead Engineer: | D. Taylor | | 07/12/06 |
| Project Engineer: | M. Nurse | | 18.12.06 |
| Client Representative: | B Bunum | | 12/12/06 |

**ISSUED FOR :** [X] Design [ ] Construction [ ] Other _____

**SPECIFICATION FOR SUBSTATION BATTERY CHARGER – 50VDC**

# Record of Revisions

| Rev. No. | Date | Description |
|---|---|---|
| 1A | 05/05/2006 | Petronet specification reviewed and updated during NMPP Project – Early Feasibility Phase. |
| 1B | 10/08/2006 | Petronet specification updated with client comments during NMPP Project – Preliminary Design Phase and re-issued for approvals. |
| 2 | 14/09/2006 | Issued for Design – NMPP Project |
| | | |
| | | |
| | | |

# PETRONET

## SPECIFICATION PL 648

### BATTERY CHARGER SPECIFICATION

## THIS SPECIFICATION COVERS PETRONET'S REQUIREMENTS FOR THE SUPPLY OF 50V DC BATTERY CHARGER

### REVISION: 2


Copyright © Petronet, All rights reserved, including rights to amendments

# TABLE OF CONTENTS


**1. GENERAL ..... 3**

1.1. SCOPE ..... 3
1.2. REFERENCES ..... 3
1.3. SOUTH AFRICAN BUREAU OF STANDARDS ..... 3
1.4. SUBMITTALS ..... 4
1.5. QUALITY ASSURANCE ..... 4
1.6. PRODUCT DELIVERY AND HANDLING ..... 4
1.7. SERVICE CONDITIONS ..... 4

**2. TECHNICAL REQUIREMENTS ..... 4**

2.1. GENERAL ..... 4

**3. BATTERIES ..... 4**

3.1. OPERATING DUTY AND RATING ..... 5
3.2. GENERAL CONSTRUCTION ..... 5
3.3. SEALED ("MAINTENANCE FREE") LEAD-CALCIUM BATTERY ..... 5
3.4. BATTERY ACCESSORIES ..... 6
3.5. BATTERY RACK ..... 6

**4. BATTERY CHARGER ..... 6**

4.1. GENERAL CONSTRUCTION ..... 6
4.2. BATTERY CHARGER SIZING CRITERIA ..... 7
4.3. DESIGN ..... 7
4.4. BATTERY CHARGER ACCESSORIES ..... 7
4.5. BATTERY CHARGER PROTECTION AND ALARMS ..... 9
4.6. FINISH ..... 9
4.7. NAMEPLATES ..... 9

**5. ENGINEERING DELIVERABLES ..... 9**

5.1. DRAWING REQUIREMENTS ..... 9
5.2. SPARE PARTS LIST ..... 10
5.3. MATERIAL LIST ..... 10
5.4. INSTALLATION, OPERATING AND MAINTENANCE MANUALS ..... 10

**6. INSPECTIONS AND TESTS ..... 10**

6.1. FACTORY INSPECTION AND TESTS ..... 10
6.2. FIELD CHECKOUT AND TESTING ..... 10

**7. PREPARATION FOR SHIPMENT ..... 11**

**8. GUARANTEE ..... 10**

**9. GENERAL ..... 10**



Copyright © Petronet, All rights reserved, including rights to amendments

# 1. GENERAL

## 1.1. Scope

1.1.1. This specification prescribes the general requirements for batteries, battery supports, and battery chargers for the supply of dc power for the tripping of medium voltage switchgear.

1.1.2. The specific requirements of each battery charger and battery bank; i.e. ac input voltage, normal loads, emergency loads and circuit-breaker operating requirements; shall be as given on the detailed individual datasheets which shall form part of the contract documentation.

1.1.3. CONTRACTOR shall furnish any special tools for installation and maintenance.

1.1.4. The intent of this specification is to properly specify equipment that not only meets applicable safety standards, but shall also perform reliably in the specified environment with reasonable life expectancy, (defined as 10 years for the charger and 4 years for the batteries). Any accessory, fabrication method, and operational methods not specified herein, but recommended for safe and satisfactory performance of the equipment, shall be brought to the attention of the COMPANY.

1.1.5. This document will not completely specify the details of the equipment and services in the CONTRACTOR's scope of supply. CONTRACTORS are invited to make recommendations with justification, any options available that can be beneficial in considering cost performance, maintainability and quality. Such options shall be considered by the COMPANY in the evaluation of suitability and benefits offered.

1.1.6. Petronet will prefer battery charger units as supplied by Blueginger, Static Power or similar.

## 1.2. References

1.2.1. The publications listed below form part of this specification. Each publication shall be the latest revision and addendum in effect on the date this specification is issued for construction, unless noted otherwise. Except as modified by the requirements specified herein, or the details of the drawings, work included in this specification shall conform to the applicable provisions of these publications.

- **SANS 1652** Battery charger – Industrial type, (2004).
- **SANBS 1632** Batteries. Parts: 1 (2005), 2 (2005), 3 (2005).
- **SANS 1474** Uninterruptable power systems, (2004).
- **SANS 60529** Degrees of protection provided by enclosures (IP Code), (2001).
- **SANS 60896** **Stationary lead-acid batteries. Part 11 (2003), 21 (2004), 22 (2004).**

1.2.2. In addition to the requirements of this specification, battery chargers and batteries shall also comply with the mandatory requirements of The Occupational Health and Safety Act of the Republic of South Africa (Act No 85 of 1993).

1.2.3. The order of precedence of documents, standards and specifications is as follows:

- PO / Contract documents
- Individual datasheets
- This specification
- Specification and Standards listed in Section 1.2 – References

## 1.3. South African Bureau of Standards

1.3.1. CONTRACTOR shall ensure that the equipment satisfies the requirements of all relevant SABS specifications and codes of practice.


Copyright © Petronet, All rights reserved, including rights to amendments

1.3.2. Where applicable, equipment items shall carry the SABS mark to demonstrate compliance with the directives. Copies of the manufacturer's SABS 'Declaration of Conformity' certificates and test reports shall be provided with the bid.

1.3.3. CONTRACTOR may at his discretion, elect to provide SABS marking of the complete equipment assembly. In this case, the CONTRACTOR shall describe, in the bid, the procedure to be followed and / or details of the documentary evidence that will be provided for each component item of the complete assembly, which is necessary to demonstrate compliance with the relevant directives / regulations.

### 1.4. Submittals

1.4.1. CONTRACTOR shall submit documents for review and shall furnish final certified copies of all documents.

1.4.2. Manufacturers type test certificates shall be submitted with equipment test reports.

### 1.5. Quality Assurance

1.5.1. CONTRACTOR shall bring to the COMPANY's attention any discrepancy found in this specification. No deviations shall be made without prior written authorisation from the COMPANY.

1.5.2. Equipment shall be built under a strict quality assurance programme and shall have a guaranteed lifetime of at least 15 years.

### 1.6. Product Delivery and Handling

1.6.1. Packaging and delivery requirements shall be as specified in the attachments to the contract.

1.6.2. Equipment shall as a minimum be protected from mechanical damage, ingress of dust, dirt and water during transportation and storage on site.

1.6.3. The equipment shall be provided with lifting angles, plates or devices suitable for hooks and slings, as necessary.

1.6.4. Quantities of touch-up paint shall be provided to repair painted finishes at site.

1.6.5. CONTRACTOR shall prepare and deliver the required drawings and instruction manuals with the equipment. Items to be shipped loose shall be approved by the COMPANY. Loose items for field installation shall be tagged and shall include assembly instructions.

### 1.7. Service Conditions

1.7.1. Battery charger and batteries shall be suitable for mounting indoors. Ambient conditions are as follows:

- Temperature ranges between –10 $^{o}$C and 40 $^{o}$C.
- Relative Humidity of up to 98%.
- Altitude ranges up to 1800 meters above sea level.

## 2. TECHNICAL REQUIREMENTS

### 2.1. General

2.1.1. The system shall consist of a battery bank complete with inter-cell connectors and hardware, a battery rack, and a charger as described in the datasheets.

## 3. BATTERIES


Copyright © Petronet, All rights reserved, including rights to amendments

### 3.1. Operating Duty and Rating

3.1.1. During normal operation, the battery shall be "floating" on the line with the battery charger connected. The normal steady state loads shall be specified on the datasheets.

3.1.2. The battery shall have a minimum capacity of 65 Ah at 50 V DC.

### 3.2. General Construction

3.2.1. The battery bank shall be designed for floating service under normal operation with a periodic equalise / boost charge from a connected battery charger.

3.2.2. The battery bank shall consist of sealed "maintenance free" lead-calcium cells as specified on the datasheets.

3.2.3. The battery bank shall have a life expectancy and prorated warranty of the duration indicated on the datasheets.

3.2.4. The cell containers and covers shall be moulded of a material that is resistant to heat, shock, and chemical attack. The cell cover shall be permanently affixed to the container to form a permanent leak-proof seal. Covers shall be equipped with explosion resistant, flame arresting vent caps. Electrolyte level lines shall be marked on all four sides of the container.

3.2.5. Sediment space shall be provided in each cell so that it shall not require any cleaning during its life.

3.2.6. Terminal posts shall be sized to carry the related current, but sealed against creepage of electrolyte and equipped with bolts for inter-cell connection. Posts, bolts and associated hardware shall be manufactured of material resistant to the corrosive action of the electrolyte.

3.2.7. The cells shall be shipped filled with electrolyte and charged when manufactured in South Africa, but shall be shipped dry and sealed (in dry state charge) to be filled with acid on site, if manufactured outside of South Africa.

3.2.8. Inter-cell connectors and insulated inter-tier jumpers shall be supplied to provide a 15 mm spacing between cell or units for each battery bank. Inter-cell connectors shall be of a suitable material for the supplied batteries. Stainless steel bolts, washers, and nuts shall be provided for high torque low resistance terminations.

3.2.9. The battery shall be delivered, installed and commissioned on site and then subjected to a capacity test in accordance with Section 13 of SANS IEC 60896 as an acceptance test. The CONTRACTOR, with the assistance of the equipment Manufacturer shall carry out the site testing and commissioning.

### 3.3. Sealed (“Maintenance Free”) Lead-Calcium Battery

3.3.1. The battery cell shall be of either the Faure (pasted plate) or tubular plate design unless specifically indicated on the datasheets. Plate design shall employ lead-calcium grids.

3.3.2. The battery cell shall be recombinant sealed maintenance free type with positive limited plate groups operating in the oxygen cycle. Battery cells shall be non-gassing so that ventilation or special battery rooms are not required.

3.3.3. The electrolyte shall be either gelled type or liquid immobilised by absorbent plate separators.


Copyright © Petronet, All rights reserved, including rights to amendments

### 3.4. Battery Accessories

3.4.1. The CONTRACTOR shall recommend the make up of a “battery accessory set” containing the equipment required for the maintenance and testing of the batteries. One “battery accessory set” shall be supplied with each battery set.

3.4.2. The ‘battery accessory set” shall as a minimum include the following maintenance accessories:

- Cell numbers and warning labels
- 1 x cell lifting device
- 1 x container and no-oxide grease
- Load tester capable of drawing 50% of full load (variable).

### 3.5. Battery Rack

3.5.1. A battery rack shall be furnished for each battery set, and shall be as described below and indicated on the datasheets.

3.5.2. Battery racks shall be constructed from steel, and coated with a material that resists the corrosive effects of spilled electrolyte. Trays of corrosion resistant plastic shall be provided under each rack to contain electrolyte spillage or leakage.

3.5.3. Vented batteries shall not be stacked in tiers one above the other, but in stepped arrangements for ease of maintenance. The height of the rack plus the batteries shall not exceed 1200mm.

## 4. BATTERY CHARGER

### 4.1. General Construction

4.1.1. The charger shall be self cooled and completely assembled and wired in a free-standing enclosure. The enclosure shall be constructed such that it affords a degree of protection of at least IP 42 in accordance with the requirements of SANS IEC 60529.

4.1.2. The cabinet shall be arranged for front operation and maintenance. Removable side panels may be provided, but rear access shall not be required. Provision shall be made for opening the enclosure to allow service access to all components, without having to dismantle any of the circuitry or de-energising the battery charger.

4.1.3. It shall not be possible to remove, open or withdraw any door, casing, lid, cover or similar components, (for purpose of adjustments, maintenance or repairs), without the use of keys or tool.

4.1.4. A fused isolator switch shall be provided on the input to the battery charger.

4.1.5. A MCB shall be provided in the connection from the battery charger output to the battery terminals to protect the battery against external short circuits; and shall be mounted within the charger enclosure.

4.1.6. Battery charger shall be equipped with auxiliary contacts for remote alarming of the following conditions:

- Battery Charger Fail

4.1.7. The metal used for the enclosure and its parts, (i.e. doors, casing, lid covers) shall be rigid and of such a thickness as to provide sufficient strength. Metal surfaces shall be protected against corrosion.


Copyright © Petronet, All rights reserved, including rights to amendments

4.1.8. The cabinet shall be constructed so as to permit cable / conduit entrance from both the top and bottom of the cabinet

4.1.9. All bolts, nuts, screws and washers used in the construction of the cabinet, shall be of an intrinsically corrosion resistant metal or shall have been so treated as to render them resistant to corrosion.

4.1.10. All doors carrying any live conductors shall be earthed.

4.1.11. Lifting means, such as removable lifting devices, facilities for forklift handling or other means, shall be provided for easy handling and transporting of the battery charger, unless the mass is smaller the 20 kg.

### 4.2. Battery Charger Sizing Criteria

4.2.1. The battery charger shall be sized to charge a totally discharged battery set to 80 % of full capacity within 10 hours.

4.2.2. If required, the charger shall be derated for ambient temperature and altitude.

### 4.3. Design

4.3.1. The battery chargers shall be of a simple, non-electronic design. A MCB shall protect the primary side of the step-down transformer. The secondary side of the transformer shall supply a simple diode rectifier. A choke shall be incorporated between the load and rectifier to limit the charging current. A volt sensing relay shall be installed on the output side of the choke.

4.3.2. Input and output power circuits shall have overcurrent protection, in the form of thermal-magnetic type circuit breakers. Breakers shall be capable of being manually operated with door closed.

4.3.3. The charger shall be capable of maintaining an output voltage within ± 1 % of the DC float voltage and ± 3 % the equalisation voltage under all load conditions, with an input variation of ± 10 % in voltage and ± 5 % in frequency.

4.3.4. Ripple in the battery charger output shall not exceed 1 % of nominal voltage for all values of load within the charger rating.

4.3.5. The battery charger shall have a minimum efficiency of 90 % at rated load.

4.3.6. The battery charger shall be equipped with a choke to limit load current under discharged battery conditions.

4.3.7 The rating of the battery charger shall be 10 Amps, (minimum).

### 4.4. Battery Charger Accessories

4.4.1. The battery charger shall be equipped with the following precision measuring and indicating instrumentation, preferably of the digital metering type:

- AC input voltmeter for the charger (accuracy of +/- 2 % of full scale)
- DC output voltmeter for the charger (accuracy of +/- 2 % of full scale)
- DC output ammeter for the charger (accuracy of +/- 2 % of full scale)
- Battery load current and direction of flow

4.4.2. The battery charger shall be equipped with the following accessories:

- Indicating lights: Power on, Float charging

4.4.3. The battery charger shall be equipped with 5 sets of positive load and negative load terminals sized to accommodate 16mm$^2$ cable


Copyright © Petronet, All rights reserved, including rights to amendments

Copyright © Petronet, All rights reserved, including rights to amendments

### 4.5. Battery Charger Protection and Alarms

4.5.1. The battery charger shall be equipped with the following alarm contacts for remote indication:

- Loss of input voltage to charger
- A charger failure alarm
- A DC under-voltage alarm (loss of voltage).

4.5.2. The ground fault alarm shall be initiated via two earth fault detection relays on negative-to-earth or positive-to-earth faults. The wiring of this device shall include permanently installed removable links to permit it to be disabled with ease should the charger be employed on an earthed dc distribution system.

4.5.3. All alarms shall be of a latching type with a manual reset and a common alarm output.

4.5.4. MCB trip indication and alarms shall be provided to monitor the status of diode protection and facilitate maintenance work.

4.5.5. Alarm conditions are to be identified individually on an LED type visual display located on the battery charger control panel.

4.5.6. All alarm relays shall be fitted with an additional normally closed (fail-safe) voltage-free contact for use with a remote monitoring facility. These contacts shall be wired to a terminal strip on the charger control panel for connection by cable to the remote monitor.

### 4.6. Finish

4.6.1. The cabinet shall be cleaned and primed as follows:

- Primer- Single pack high build vinyl matt primer red oxide colour. Dry film thickness shall be 65 μm per coat.
- Intermediate coat – Light admiralty grey, semi-gloss single pack high build vinyl. Dry film thickness shall be 50μm to 70μm per coat.
- Finish coat – Dark Blue / Grey or as otherwise specified, semi-gloss single pack vinyl enamel. Dry film thickness shall be 25 μm to 35 μm.

### 4.7. Nameplates

4.7.1. Each charger shall have its own identification nameplate indicating the equipment name and number; this nameplate shall be mounted at the top centre of the unit or in a prominent location.

4.7.2. Permanent nameplates shall be supplied to identify each voltmeter, ammeter, switch, timer, rheostat, relay, and other major components.

4.7.3. Nameplates shall be laminated plastic. Characters shall be black on a white background or as otherwise specified. All wording shall be in the English language.

## 5. ENGINEERING DELIVERABLES

### 5.1. Drawing Requirements

5.1.1. Typical drawings are not acceptable unless they are revised to show only the equipment furnished.

5.1.2. Reproducible drawings for approval shall be supplied as follows:

- Plan and elevation drawings of the equipment indicating outline dimensions, mass, space for cable or conduit entrance, terminal locations and minimum recommended clearances.


Copyright © Petronet, All rights reserved, including rights to amendments

- Elementary (schematic) diagrams indicating all control devices and device contacts, and all device and terminal block terminal numbers. (To component level for re-ordering of integrated circuits)

- Connection (wiring) diagrams indicating all interconnecting wiring and the approximate physical location of all devices in the assembly. All terminal blocks and wires shall be clearly labeled.

- Printed circuit board layout and schematic diagrams and manuals indicating test point voltages and / or signals.

### 5.2. Spare Parts List

5.2.1. Complete spare parts list, including parts location diagram or drawings, and prices that the Manufacturer recommends for the first two year's of operation shall be submitted on the SPIR (Spare Parts and Interchangeability Record) form attached with the contract documentation.

### 5.3. Material List

5.3.1. A material list giving the quantity, type, rating, and Manufacturers catalogue number of all items in each assembly.

### 5.4. Installation, Operating and Maintenance Manuals

5.4.1. Installation, operating and maintenance instructions, which cover all the equipment furnished, shall be provided.

## 6. INSPECTIONS AND TESTS

### 6.1. Factory Inspection and Tests

6.1.1. The COMPANY, prior to shipment, shall inspect the batteries and battery charger at the manufacturing plant.

6.1.2. The inspection shall consist of physical check for completeness and conformance to specifications, and operational tests as required.

6.1.3. Factory tests shall include all the Manufacture's routine tests and all additional tests specified in the datasheets. The Engineer shall witness all tests. Where the Manufacturer already has type test certificates, representative of the equipment he has offered he shall submit copies of these together with his tender documentation.

### 6.2. Field Checkout and Testing

6.2.1. In addition to any factory inspection and witnessed tests which may have been carried out at the Manufacturer's plant on the equipment, all equipment and material shall be inspected immediately after receipt at the job-site.

6.2.2. On completion of the installation of all equipment and materials on site and prior to commissioning, all electrical equipment and systems shall be checked out and tested in strict accordance with the requirements for the project.

6.2.3. The CONTRACTOR shall include the price extra in his/her bid for commissioning of the battery charger and assembly and commissioning of the battery on site. This shall include the carrying out of the initial charging of the battery and a battery capacity test witnessed by the Engineer.


Copyright © Petronet, All rights reserved, including rights to amendments

## 7. PREPARATION FOR SHIPMENT

7.1.1. Preparation for shipment shall be as noted in the contract documentation. The Manufacturer shall be solely responsible for the adequacy of the preparation for shipment. The COMPANY reserves the right to inspect and approve the equipment packaging before shipment.

## 8. GUARANTEE

8.1.1. A written guarantee of 12 months is required on all workmanship and equipment supplied by the contractor.

## 9. GENERAL

9.1.1. During the tendering stage the tenderer shall indicate that his/her tender complies in every respect with this Specification, if not, precisely how it differs from this Specification.

## 10. AS WITNESSES

1. _____ _____
CONTRACTOR

2. _____ DATE: _____

## 11. AS WITNESSES

1. _____ _____
CHIEF EXECUTIVE (PETRONET)

2. _____ DATE: _____


Copyright © Petronet, All rights reserved, including rights to amendments

# SPECIFICATION FOR SUBSTATION BATTERY CHARGER 50VDC

DATE: REV:

| SUBSTATION: BUILDING: EQUIPMENT TAG NO.: | Initial / Date |
|---|---|
| **Note!!!** When batteries are placed in service while work is still being performed around them, protection should be provided. Metal objects laid or dropped on them could cause a short or an explosion. Tarpaulin, plastic or similar material, should not be used because batteries in service require ventilation. | |
| 1. Receiving Operations / Inspection complete. | |
| 2. Equipment Protection Program instituted and documented. | |
| 3. Batteries and racks installed and checked for proper mechanical installation, including connections and number of cells. | |
| 4. Batteries filled with electrolyte to proper level and charged in accordance with manufacturer's recommendations. | |
| 5. Lead acid batteries checked with hydrometer for correct specific gravity, in accordance with manufacturer's specifications. | |
| 6. Grounding / earthing connection checked. Record readings on Test Record Form: 000.265.F1109: Ground Continuity Test Record (Electrical Equipment and Ground Test Bars). | |
| 7. Battery charger checked for proper installation, wiring complete and properly connected. | |
| 8. Charger operates in accordance with manufacturer's recommendations. Current output, voltage, and operation of control components checked. | |
| 9. Check charger nameplate against approved supplier drawings. | |
| 10. Accessory equipment such as: hydrometer, thermometer, special wrenches, and spare electrolyte accounted for. | |
| 11. Batteries, battery racks, and charger cleaned. Terminals and interconnectors covered with protective base. | |
| 12. Test charger for maximum rated output and correct operation, as required by Project specifications. | |
| 13. Booster charge in accordance with manufacturer's instructions. | |
| 14. Set charger for float operation with adjustment of proper float voltage. | |
| 15. Charger marked with float and boost charge voltage limits. | |
| 16. Verify proper operation of low DC voltage relay and alarm contacts. Indicate limits. | |
| 17. Verify proper operation of AC failure relay and alarm contacts. | |
| 18. Verify ground detection relay or lights operate properly. Verify alarm output relays operate. | |
| 19. Voltmeters checked, zeroed. | |
| 20. Ammeters checked, zeroed. | |
| 21. Fuses and circuit breakers in accordance with supplier drawings. | |
| 22. Verify operation of charger output failure relay and alarm contacts. | |
| 23. Supplier Representative provided service / supervision for this equipment. Supplier test reports attached to this inspection record. | |
| 24. Equipment Protection Program completed and documented. | |
| 25. Final inspection complete. Punch items on Form: 000.265.F1300: Electrical Punch List Record. | |

**Distribution:**

**Contractor / Date:**

# SPECIFICATION FOR SUBSTATION BATTERY CHARGER 50VDC

| | | | |
|---|---|---|---|
| DATE: | | | REV.: |
| CONTRACT NO.: | PO NO.: | BY: | REVIEWED: |
| SPECIFICATION NO.: | | DATASHEET NO.: | DATE OF INSPECTION: |
| SUPPLIER: | | SHOP ORDER: | |
| VOLTAGE: | | INSPECTOR: | |

**Note!!!** Record all defects, missing parts, and action taken to correct.

| Item No. | A. Visual Inspection | Serial / Tag No. | | | |
|---|---|---|---|---|---|
| | | | | | |
| 1 | **Cabinet**<br>Type of Cabinet - Indoor and Outdoor<br>Mounting - Wall, Floor, and Rack<br>Mounting Hardware or Provisions<br>Cabinet Dimensions<br>Conduit Openings<br>Ground Lugs<br>Paint Finish | | | | |
| 2 | **Nameplate Ratings**<br>AC Input Volts, Phases, and Hertz<br>AC Input Amps<br>DC Output Volts<br>DC Output Amps<br>Application (Type and Number of Battery Cells) | | | | |
| 3 | **Instruments and Controls**<br>DC Voltmeter (Charger)<br>DC Ammeter (Charger)<br>Float Adjustment Rheostat<br>Equalizing Adjustment Rheostat<br>Float - Equalize Selector Switch | | | | |
| 4 | **Optional Accessories**<br>Battery Ammeter (On Shunt Box)<br>Load Ammeter (On Shunt Box)<br>Battery Voltmeter<br>Ground Voltmeter<br>AC Pilot Light<br>Equalizing Charge Timer<br>Equalizing Pilot Light<br>AC Failure Alarm Contacts<br>Low DC Alarm Contacts<br>High DC Alarm Contacts<br>Time Delay Relays on Alarms<br>Circuit Breaker Protection for Input and Output (Instead of Fuses)<br>Customer Terminals | | | | |

# SPECIFICATION FOR SUBSTATION BATTERY CHARGER 50VDC

| Item No. | B.. Tests | Serial / Tag No. | | | |
|---|---|---|---|---|---|
| | | | | | |
| 1 | **Use Manufacturer's Standard Test Procedures to Test at Least the Following:**<br>Maximum Equalizing Voltage at Full Load Current<br>Maximum Float Voltage at Full Load Current<br>Float Voltage at 50% Load Current<br>Equalizing Voltage at 50% Load Current<br>DC Output Voltage Regulation for 90 - 100% AC Input Voltage Variation (Should be Less than 1%)<br>Current Limit Adjustment<br>Short Circuit Test<br>Ground Detection System<br>Alarms<br>Meters<br>Pilot Lights<br>Equalizing Charge Timer | | | | |

The following standards refer to the testing of this equipment:

- UL 1236-86
- UL 1564-83