Tender Description: REPLACEMENT AND INSTALLATION OF FENCE AT THE PORT OF NGQURA AND COEGA KOP QUARRY FOR A PERIOD OF 10 MONTHS

Tender Number: TNPA/2025/04/0017/94422/RFP

All Questions and Answers from **29 May 2025 to 17 June 2025**

PRE-NON COMPULSORY CLARIFICATION MEETING		
#	**Question**	**Answer**
1	I have a question regarding the fencing works tender in Port Elizabeth. I see that the scope is going to be evaluated in three groups Group 1: Tendering for Both Concrete & Hot dip Galvanized Group 2: Tendering for Concrete fence Group 3: Tendering for Hot dip galvanized My question on the tenderer's experience requirements requires a minimum of 5 references, 2 being concrete and 3 being galvanized. Do I need to submit experience for both works even if I am tendering for one section of works? Please advise	Yes, that is correct. If you are tendering for Concrete fencing, you will only submit proof of concrete fencing. The same applies if you are tendering for hot dipped galvanized mesh fencing No, only for the type of fencing between the 2 that you will be tendering for

PRE-NON COMPULSORY CLARIFICATION MEETING		
#	**Question**	**Answer**
2	Kindly send me the Microsoft Teams link for the briefing session taking place on Wednesday, 11 June 2025 at 10:00 for the Transnet tender TNPA/2025/04/0017/94422/RFP	Apologies for the late response. We would not issue a meeting link on an email as we would not have email addresses of potential attendees. The link is on the tender document, Section 1 on page 8 of 254.
3	Kindly note that I will be attending the above clarification meeting and Mark will be attending the site visit. Please add us to any required access lists.	Thank you for your information. There are no specific access lists except the attendance information as stated on page 8 to 9 of 254.
4	Can I please have the link to the briefing of the abovementioned bid	The meeting link is stated on page 8 of 254 of Section 1 RFP
5	I am unable to access the online tender clarification please assist. I am shown the following message: 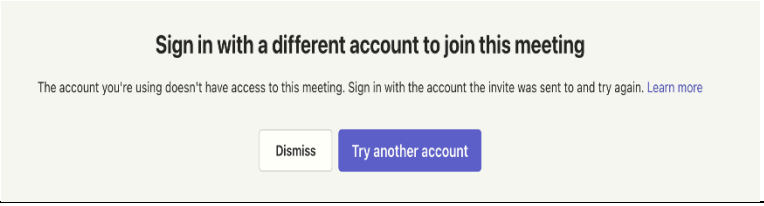 	Apologies that you could not access the link, but others could access it. The non-compulsory clarification meeting presentation, minutes, Questions & Answers even Questions and Answers for the compulsory site visit will be published on the 2 websites where the tender is currently advertised
6	I hope this finds you well, I have been trying to use the link to join the meeting on behalf of AP DEVELOPMENT, but it is not going through.	Apologies that you could not access the link but others could access it. The non-compulsory clarification meeting presentation, minutes, Questions & Answers even Questions and Answers for the compulsory site visit will be published on the 2 websites where the tender is currently advertised. You welcome to view the information there
7	Submission it will be by JV	The clarification meeting details are clearly stated on page 8 to 9 of 254 as follows:

<table>
<tr><th colspan="3">PRE-NON COMPULSORY CLARIFICATION MEETING</th></tr>
<tr><th>#</th><th>Question</th><th>Answer</th></tr>
<tr><td></td><td>We noticed the Briefing is today and is Compulsory. Can we attend Site VISIT tomorrow on the 12TH of June 2025.

Question 1 : By attending site VISIT only, we can't be Disqualified?</td><td>1. Non-compulsory clarification meeting on the 11th of June 2025 at 10am. Non-attendance will not disqualify you.
2. Compulsory site visit on the 12th of June 2025 at 8h30. Non-attendance WILL DISQUALIFY you as clearly stated on 8 of 254
<table><tr><td>NON-COMPULSORY TENDER CLARIFICATION MEETING AND COMPULSORY SITE VISIT</td><td>NON-COMPULSORY CLARIFICATION MEETING

A Non-Compulsory Tender Clarification Meeting will be conducted virtually on Microsoft Teams on the 11th of June 2025, from 10h00am for a period of ± 2 (two) hours.

To access and attend the meeting, click on the link: Replacement & Installation of Fence PoN & CKQ

Despite the clarification meeting being non-compulsory, Transnet nevertheless encourages all tenderers to attend. Transnet will not be held responsible if any tenderer who did not attend the non-compulsory clarification meeting subsequently feels disadvantaged as a result thereof.

COMPULSORY SITE VISIT (Non-attendance will disqualify tenderer)

Site walk/visit will take place on a different day than the non-compulsory clarification meeting in the following order:</td></tr></table></td></tr>
</table>

NON-COMPULSORY CLARIFICATION MEETING – 11 JUNE 2025		
#	**Question**	**Answer**
8	Is it a must for Joint Venture contractors to submit a consolidated B-BBEE certificate?	Yes, it is a must to have a consolidated B-BBEE certificate according to CIPC Regulations. If single B-BBEE certificates are submitted for a joint venture, there will be a score of zero (0) on the specific goal. On CIDB, the Joint Venture partners will be registered separately but a joint CIDB grading calculator will be used
9	Is the presence of a registered person at the site visit tomorrow compulsory?	The site visit tomorrow (12 June 2025) is compulsory. An attendance register will be completed, and the attendance certificates will be issued on completion of the last site to be viewed. If you do not attend the site visit you will not be eligible to tender and will be disqualified.
10	If the company does not have ISO 9001, is it going to be disqualified?	The company will not be disqualified because right now the intention is to see if the tenderers have a system in place. The Quality Officer resource that is required would have to have been trained on the ISO 9001:2015. It is not being said that the company should be ISO 9001 as there is awareness that SMMEs are still going through that verification process.
11	Are we going to be penalized since it's an electronic submission if we electronically fill in the document, electronically sign it and stamp it?	No, the tenderers will not be penalized. It is not a problem to complete and sign the tender document electronically as a pdf version is advertised. Importantly it is to ensure that all returnable documents on section 1 RFP of 254 pages are completed, signed and returned.
12	The standard that is being measured for quality is it 9001:2015 or 9001:2008 is still applicable?	ISO 9001:2008 has been superseded by ISO 9001:2015 in 2015 therefore 9001:2008 is no longer applicable. A person (Quality Officer) with ISO 9001:2008 certificate will be disregarded as that is not a regulation that is currently being implemented in terms of ISO 9001. As of current the ISO 9001:2015 is in a process of being superseded by ISO 9001:2025 by next year, so we do not accept ISO 9001:2008 but only ISO 9001:2015 certification will be accepted.

NON-COMPULSORY CLARIFICATION MEETING – 11 JUNE 2025		
		It is not a requirement of the tender for a tenderer (company) to have an ISO certificate. It is the resource (Quality Officer) that will be working on the project. It is being said that the resource should have undergone training (Quality Management System - QMS) for ISO 9001:2015. These training courses are mainly ISO 9001:2015 implementation and the auditing as there must be comfort that the Quality Officer that will be employed for this project is fully aware of how to implement the ISO 9001:2015 QMS requirements in the project and not ISO 9001:2008.
13	The question is on page 49 of 254, 2.1.6 for Bonds/Guarantees, Financials/Insurance: Must we submit all those documents T2.2-32 to T2.2-35 or we choose?	We have a list of returnable documents which starts from the RFP page 2 where you select the type of fence you are tendering for. Therefore, all these returnable documents are named T2.2-01 which is a site visit attendance certificate up until the last one T2.2-37 and up to 2.2 Pricing Data. You need to return all of them and not select which ones you wish to submit. The returnable documents for scoring stage 2 functionality/technical evaluation must be submitted to score points and meet the minimum threshold of 60 points, if there is no submission and the score is below 60 points you will be disqualified on stage 2. On stage 3 for the specific goals, if you do not submit the returnable documents, the score will be zero (0). No selection of documents to submit but all must be returned. It is important to go through Section 1 RFP to know all the tender returnable documents
14	I need further clarification regarding the ISO as it was mentioned that the small companies are still going through the ISO verification process. What ISO verification do we need to provide as I was confused there?	It is not a requirement of the tender for a tenderer (company) to have an ISO certificate. It is the resource (Quality Officer) that will be working on the project. It is being said that the resource should have undergone training (Quality Management System - QMS) for ISO 9001:2015. These training courses are mainly ISO 9001:2015 implementation and the

NON-COMPULSORY CLARIFICATION MEETING – 11 JUNE 2025		
		auditing as there must be comfort that the Quality Officer that will be employed for this project is fully aware of how to implement the ISO 9001:2015 QMS requirements in the project and not ISO 9001:2008. Please refer to the evaluation schedule for Quality Requirements which indicates what needs to be submitted for evaluation purposes for the Quality Officer
15	Regarding the organogram for JV, as each company have its own CEO. Would each company provide their own organogram, or would it be a JV organogram with the selected Lead Company's CEO signing the organogram?	The purpose of the Organogram is to show the key personnel proposed for the project and their reporting lines. For a JV, the organogram can either be a consolidated one that indicates the key personnel and indicate from which individual company the key personnel is from in line with the JV agreement OR it can be all JV partner's organograms with key personnel clearly indicated as per the tender requirements
16	I want to confirm the right document that one must have if it's the one with 254 pages. Where is the evaluation criteria that was shared? Please refer me to the specific page where you showed the evaluation criteria, ISO etc.	Section 1 Request for Proposal is 254 pages. Section 2 Scope of Work with Annexures is 480 pages Yes, the evaluation criteria is on Section 1 RFP. Section 2 Scope of work is not to be returned but for understanding of the type of fences being required and including the specifications of the type of fences. All requirements addressed on the scope of work will be returned on stage 2 functionality/technical returnable documents That is Section 1 RFP The advertised documents should be Section 1 RFP, Section 2 Scope of Work with Annexures, Addendum 1 for Tenderer's Previous Experience clarified scoring when tendering for separate type of fences and

NON-COMPULSORY CLARIFICATION MEETING – 11 JUNE 2025		
		Addendum 2 including the compulsory site visit on Stage 1 as it was omitted by mistake
17	Is there special onboarding for the different sites we need to adhere to, do we need to include this on the schedule, and what is the recommended duration if there is such a requirement? When we price Preliminaries and Generals (P&Gs), it will be a challenge if we do not have something to benchmark with because of the resources that will be allocated to the project for that particular time, is there a preferred duration to make allowance on the P&Gs?	Upon the award of the tender, there will be a kick-off meeting with the project team for the onboarding requirements by the Contractor/s for all the sites/type of fences. The entire project is for 10months, if tendering for both sites/type of fences, the programme must cover both sites/type of fences for a period of 10months. If tendering for 1 of the sites/type of fence, the programme should be for a period of 5months The timelines for the entire project is given to be 10months. The anticipated start date can be used as the base which is stated on the Contract Data.
18	Does the schedule have to be MS Project, or can we use other programmes such as Primavera etc.?	Microsoft Project and Primavera P6 are the only preferred software programmes to be utilized. Also, the type of software required is stated on the evaluation schedule for Programme

POST NON-CLARIFICATION MEETING 12 TO 17 JUNE 2025		
19	2025061113105069 9.pdf 2025061113110649 9.pdf Kindly find attached for your attention	Kindly note that the Addendums are submitted together with your tender response and not via email as stated on it as per below: "All Tenderers are hereby requested to sign this addendum as an acknowledgement and consent to this addendum and return it as a returnable together with their proposal documents"
20	Do you have the attendance register to share as well in addition to the clarification meeting documents? As a supplier of mesh security fencing, I would like to initiate a dialogue with potential bidders to present our offerings. I trust this request is reasonable. Thank you	We share the information that aims to assist you in responding accordingly. Is there a reason why an attendance register is required? For the purposes of the information according to the POPIA it is meant to be used for the tender process and not made publicly without the consent of the potential tenderers. The only time it can be made public is after closing date as we must publish a list of all tenderers that responded to the tender invitation. The list of tenderers that responded on the cancelled tender is publicly available on the National Treasury (etenders) website and it can be useful
21	Could you kindly assist in providing an Excel form for the BoQ related to the tender (TNPA/2025/04/0017/94422/RFP-FOR THE REPLACEMENT AND INSTALLATION OF FENCE AT THE PORT OF NGQURA AND COEGA KOP) in question? Your support would be greatly appreciated. Thank you, noted.	We deliberately did not advertise the soft copy of the excel as potential tenderers get creative and change things around which makes it a challenge on evaluation hence, we only advertise a pdf copy You are welcome to create an excel for your own workings from the structure of the pdf, but it should NOT be different even on 1 line item from the advertised copy
22	Could you kindly assist in providing Drawings (soft copies) for the BoQ related to the tender (TNPA/2025/04/0017/94422/RFP-FOR	The drawings available are in the format as advertised

POST NON-CLARIFICATION MEETING 12 TO 17 JUNE 2025		
	THE REPLACEMENT AND INSTALLATION OF FENCE AT THE PORT OF NGQURA AND COEGA KOP) in question? Your support would be greatly appreciated. The advertised will do.	Please advise what do you mean by soft copy? Thank you for the confirmation. The drawings are Annexure A of Section 2 Scope of Work

COMPULSORY SITE VISIT – 12 JUNE 2025		
1st Eastern Breakwater Site for Hot Dipped Galvanized Mesh Fencing		
23	Is the intruder detection on the fence in a working state?	The intruder detections are not operational and can be removed
24	What is the length of the fence?	The length for Eastern Breakwater fence is approximately 200m, reference to Section 2 Scope of Work must be made as it is details the information per site
25	Must all the gates be changed?	Yes, please refer to Section 2 Scope of Work for details and the Bill of Quantities
26	Where must the removed fence be placed?	The successful tenderer/s will be notified of the laydown area to place the removed fence
27	Is there concrete plinth? And what do we do in cases where there is none?	Yes, there is concrete is plinth, poles will have to be planted where there is no concrete plinth

COMPULSORY SITE VISIT – 12 JUNE 2025		
2nd Multi-purpose Terminal (including C100) Site for Hot Dipped Galvanized Mesh Fencing		
28	The available concrete is narrow; it seems the base plate might not fit	The tenderer will excavate, take out and plant new one
29	Will fence go straight towards sea?	The fence will turn right at the sea wall and the directions were shown in person. The fence coordinates/ pegs will be given post award to the successful tenderer/s
30	Where will site establishment be?	The site establishment is next to Multi-Purpose Terminal, attached as Annexure A1
31	Where will service detection be carried out?	Service detection will be conducted in areas where poles will be planted
3rd Sandby Pass Site for Hot Dipped Galvanized Mesh Fencing		
32	What is the condition of the concrete?	The concrete is still strong and there is nothing wrong with it. It can still be drilled and placed onto it.
33	Will the bolts be re-used?	No, they will not be re-used
34	Are there any environmental restrictions?	There are no specific restrictions for the site for construction, but the operational phase has environmental requirements as stated on Section 2 Scope of Work Annexure D1 to D4 on pages 244 to 354
35	Will the removed fence be re-used?	Yes, it will be re-used elsewhere hence it needs to be removed with care
36	Will the intruder detectors be kept?	Contractor to remove intruder detection with care as it will be reused
37	What is the process for permits which might be required?	NEC 3 supervisor will arrange for permits when and where required

COMPULSORY SITE VISIT – 12 JUNE 2025		
4th Coega Development Corporation Site Free Issue Material for Hot Dipped Galvanized Mesh Fencing		
38	Who is the manufacturer of the free issue material pole?	The manufacturer of the free issue material pole is Betafence
39	What is the depth of excavation?	The depth of excavation id about 600mm
40	How many poles will be required?	The quantity of the poles is stated on the RFP page 16 of 254
41	Must we get the base ourselves?	The successful tenderer/s will procure poles with base plates
42	Is it only the pole and cap that is free issue material?	Yes, only those 2 items as stated on Section 1 RFP page 16 of 254
43	Can you provide a drawing of the pole?	Yes, the drawing of the pole is attached as Annexure A2 to these Questions and Answers at the bottom
44	Is there a specific name for the pole?	The details of the pole are on the drawing attached as Annexure 1A
5th Coega Kop Quarry Site for Concrete Fencing		
45	Will all the sites be allocated to 1 Contractor?	There are 3 tendering options where the award will either be to 1 successful tenderer for all 2 sites[1] or to 2 successful tenderers for each site
46	Will the same building line be used?	Yes, the successful tenderer will remove all existing fences and place new fences on the same building lines
47	Must the removed fence be given back to TNPA?	Yes, the removed fence should be given to TNPA through the Project Manager
48	If only 1 site/type of fence such as mesh fence will be tenderer for, will the CIDB registration requirement still be 7SQ?	The CIDB registration requirement has been **revised** as below, and Addendum 3 will be also advertised on the National Treasury and

[1] Site also refers to the relevant type of fence

COMPULSORY SITE VISIT – 12 JUNE 2025		
		Transnet websites citing the same including an additional Compulsory Site Visit only for Section 2 Port of Ngqura and the extension of the closing date: Tendering for Both Sections (Both Type of Fences) – **CIDB Grading Level 7SQ remains unchanged** Tendering for Section 1 Coega Kop Quarry (Concrete Fence) only – **CIDB Grading Level 7SQ remains unchanged** Tendering for Section 2 Port of Ngqura (Hot Dipped Galvanized Mesh Fence) only – CIDB Grading Level has changed from **7SQ to 6SQ**
49	Will TNPA pay for materials on site?	Transnet does not pay for material on site. There is an advance payment clause in the NEC ECC contract that cab be utilized for the project. In addition, SMME can request to be paid in 14 days after receipt of invoice based on meeting the qualifying requirement
50	If both packages are awarded to the same contractor, can the project period be reduced and can the 2 projects be carried out simultaneously?	Project duration will not be reduced to below 10months. Both sites can be executed simultaneously and the programme to be submitted to provide details of the execution plan based on the feasible period by the tenderer

COMPULSORY SITE VISIT – 12 JUNE 2025		
51	Can work be done from the outside?	Yes, some areas will force the successful tenderer/s to create working space as some areas are steep and slippery. The access can be flattened for an access ramp
52	Is the project covering the whole site or part of the site?	The project covers the whole site of Coega Kop Quarry, work will be remeasured
53	Will the contractor be solely responsible for the site, given the animals and intruders on site?	Yes, the successful tenderer/s will be responsible for the site and must refer to Section 2 Scope of work for details
54	Do we have to clear all the rocks?	The successful tenderer/s will have to clear rocks where required to create working space
55	Are there survey drawings for the boundaries?	No, the successful tenderer/s will have to follow existing fences boundaries
56	Who will be responsible for ensuring excavation permits?	NEC 3 supervisor will arrange for permits when and where required
57	What must happen to the building rubble?	There is a line item on the Bill of Quantities, stockpile areas will be identified and communicated to the successful tenderer/s. Rubble does not belong to the successful tenderer/s

Annexure A1 for Site Establishment for Section 2 Port of Ngqura (Hot Dipped Galvanized Mesh Fence) and Annexure A2 for Free Issue Material attached below

The end

ANNEXURE A1 SECTION 2 PORT OF NGQURA - HOT DIPPED GALVANIZED MESH FENCE ONLY

SECTION 1 COEGA KOP QUARRY FOR CONCRETE FENCE SHOULD HAVE ITS OWN SITE ESTABLISHMENT

Site Establishment next to
Multi Purpose Terminal

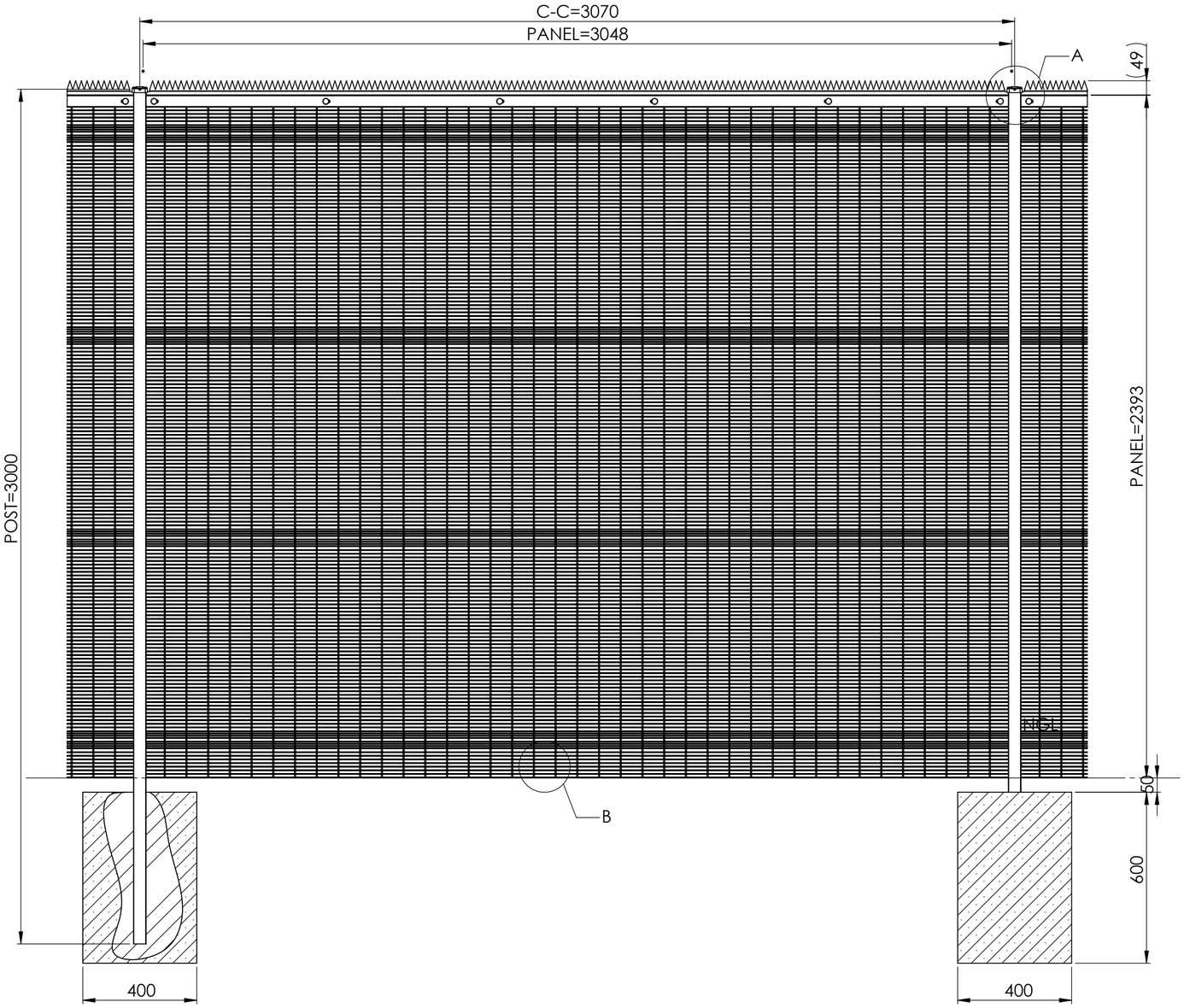

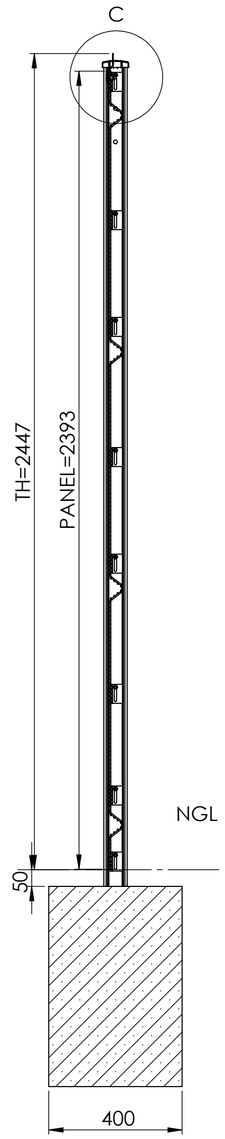

DETAIL C
SCALE 1 : 5

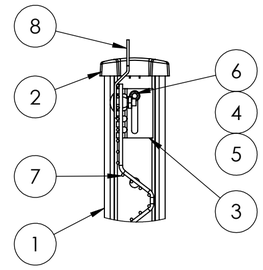

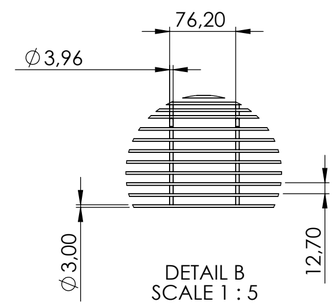

DETAIL B
SCALE 1 : 5

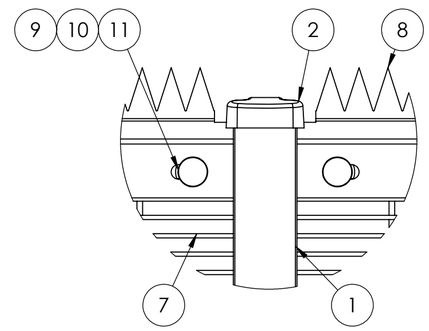

DETAIL A
SCALE 1 : 3

ANNEXURE A2 FREE ISSUE POLE DRAWING

ITEM NO.	QTY.	PART NUMBER	DESCRIPTION
			POST
1	1	SEC31P800003	POST BEKAFIX SECURE 44X70X1,5 3000MM
2	2	ACC32P800000	POST CAP BEKAFIX SECURE
3	16	SEC34P800000	FLAT MAX
4	8	M6	SELFBREAKING NUT A2
5	8	DIN 125-1 A M6	PLAIN WASHER WITHOUT CHAMFER A2
6	8	DIN 603 M6x35	Mushroom head square neck bolts
			PANEL
7	1		BETAVIEW 3/4 COMBO 3D 3048X2393 (3510-8)
8	1	SEC51P800000	ALL IN ONE RAIL L=3036
9	6	M8	SELFBREAKING NUT A2
10	6	M8	PLAIN WASHER WITHOUT CHAMFER A2

SPECIFICATIONS

Posts:
- Bekafix Secure 70 x 44 x 3000mm long.
- Set posts vertically into ground at 3070mm centres.
- Longer posts may be required where fence steps >200mm. Client to specify.

Foundations:
- Cast 400 x 400 x 600 deep 20MPa/19 stone at each post.
- Ground conditions may require additional concrete. Civil Engineer to confirm required alternate foundation size.

Lateral Support:
- Panels are laterally strengthened with V-shaped horizontal stiffener bends ref. mesh specification.

Anti Climb Over Protection:
- A serrated top edge spike rail (All-In-One Rail) fabricated from 100 mm wide x 2.5mm thk. sheet metal strip.

Mesh Panels
BETAVIEW 3/4 COMBO 3D 4V(3510-8):
- Mesh Panels shall be fabricated from high tensile steel with a weld strength of 60% and a tensile strength of 500N/mm2.
- Horizontal wires shall have a core diameter of 3.00mm
- Vertical wires shall have a core diameter of 3.96mm
- Diameter tolerance shall be +- 0,07mm.
- Apertures shall be 76.2mm W x 12.7mm H c/c of wires.
- Panels are laterally strengthened by incorporation of 4x 43mm deep, V-profiled horizontal stiffener bends.
- Panel finish size tolerances: width +- 2.0mm and height +-6mm
- Mesh panels are manufactured with Class A Zincalu wire (Galfan).

Corrosion Protection
Primary Base Coating:
- Mesh Panels: Zincalu.
- Posts: Stainless steel 3CR12
- Rails: Pre-galv.

Fixing:
- To Posts: Clamp fixed with Flat Max fixators using M6 anti-vandal cups-square bolts, shear-off nuts & flat washers.
- To Rails: Bolted using M8 anti-vandal cup-square bolts, shear-off nuts & large flat washers.
- All fasteners and fixing screws shall be:
  - For installation in General : Grade 304 Stainless steel

Optional Top Coating:
- Mesh Panels shall be uniformly RTC coated, which is free of lead, cadmium and DOP, to a minimum thickness of 200µm (microns) in accordance to EN 10245-2 Steel wire and wire products - Organic coatings on steel wire - Part 2: PVC finished wire.
- Posts & Rails: shall be polyester coated to match mesh panels to a minimum thickness of 100µm. shall be coated to match the mesh finish.
- Finish colour shall be RAL 7021.

Project/Client Title

Transnet

Rev	Date	Changed	By
01			
02			
03			
04			
05			
06			
07			

Material | **Spec** TDS-05-10
Mass Kg

BETAVIEW 3/4 COMBO 3D SYSTEM 2400MM
All In One Rail, 3000mm Post

BETAFENCE

Status APPROVED | **Designer** Kiyashan Moodley
Status by | **Date**

Free form- and placetolerances conform ISO 2768 m

Sheet 1 of 2 | **DIN** A2 | **Scale** 1:15

BTV00G800018

THIS DRAWING AND THE RELATED INFORMATION IS AND REMAINS THE EXCLUSIVE PROPERTY OF BETAFENCE WITHOUT THE PRIOR WRITTEN CONSENT OF BETAFENCE , THIS DRAWING AND THE RELATED INFORMATION MAY NEITHER BE COPIED OR REPRODUCED, NOR COMMUNICATED IN ANY WAY TO A THIRD PARTY, NOR USED FOR MANUFACTURING OUTSIDE BETAFENCE EACH INFRINGEMENT OF THESE INTELLECTUAL PROPERTY RIGHTS OF BETAFENCE SHALL GIVE RISE TO LEGAL PROCEEDINGS.