NOTES

1. 1.2m x 1.2m HUT WITH A 1.2m x 1.2m VERANDA EXTENSION (TOTAL SIZE 1.2m x 2.4m)
2. WALL HEIGHT 2m. ROOF HEIGHT 2.3m
3. 2 OPENING GLASS WINDOWS - 600mm x 900mm
4. 1 FIXED TOUGHENED WINDOW IN DOOR - 400mm x 600mm LOCKABLE DOOR
5. COLORPLUS STEEL FRAMED FLOOR WITH SHUTTER-BOARD
6. 6 ADJUSTABLE LEGS
7. CHALK COLOUR WALLS WITH A BLUE ROOF
8. SHED TO BE INSTALLED STRICTLY IN ACCORDANCE WITH INSTALLATION GUIDELINES BY THE INSTALLER
9. ALL SHEDS SHALL BE SUPPORTED ON PRECAST CONCRETE BLOCKS
10. THE REQUIREMENT FOR A FLOOR MAY BE WAIVED IF SHED IS IS TO BE BOLTED DIRECTLY ONTO A CONCRETE FLOOR SLAB
11. ENSURE THAT THE CORRECT TYPE OF CONCRETE BLOCK IS USED IN ACCORDANCE WITH RELEVANT DRAWING
12. ALL STEEL USED SHALL BE MILD TENSILE TO GRADE 350W
13. ALL BOLTS SHOULD BE HOT DIP GALVANISED TO SANS ISO 1461
14. ALL SHEDS TO BE FABRICATED, ERECTED & LEVELED TO THE MANUFACTURES DESIGN TOLERANCES
15. ZINCALUME PROFILE ROOF SHEETING
16. O/A LENGTH OF SHEET - 2770mm

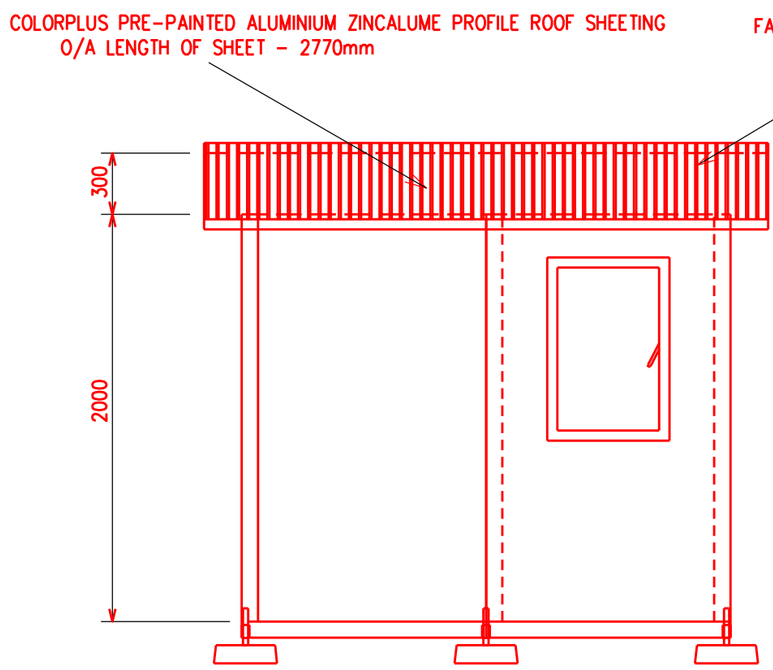

SIDE VIEW
SCALE 1:30

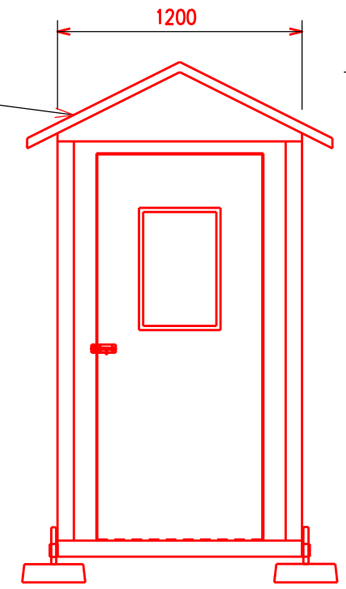

FRONT VIEW
SCALE 1:30

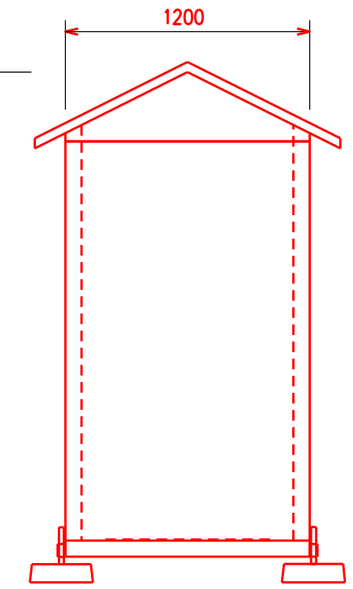

REAR VIEW
SCALE 1:30

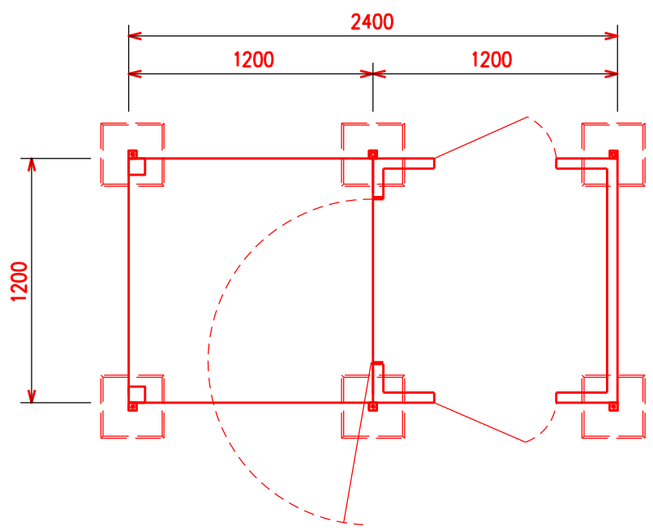

PLAN
SCALE 1:30

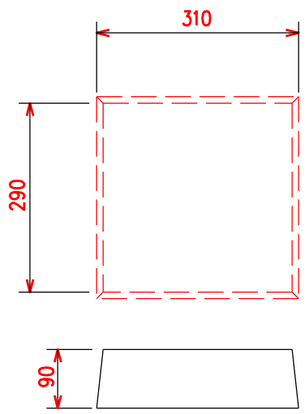

PRECAST CONCRETE BLOCK
NTS

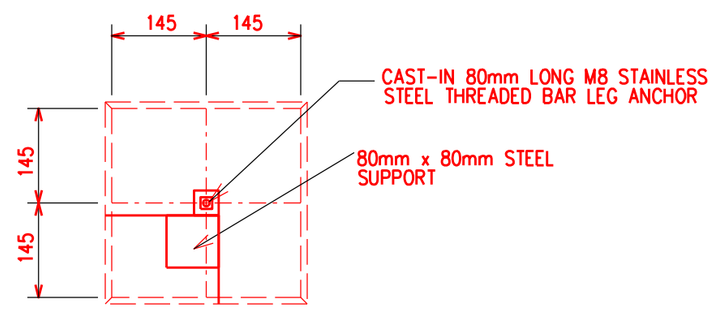

PRECAST CONCRETE BLOCK PLAN VIEW WITH SUPPORT LEG
NTS

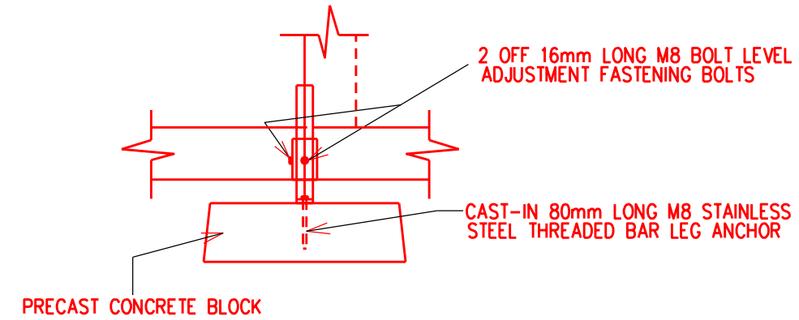

ADJUSTABLE LEG SECTION
NTS

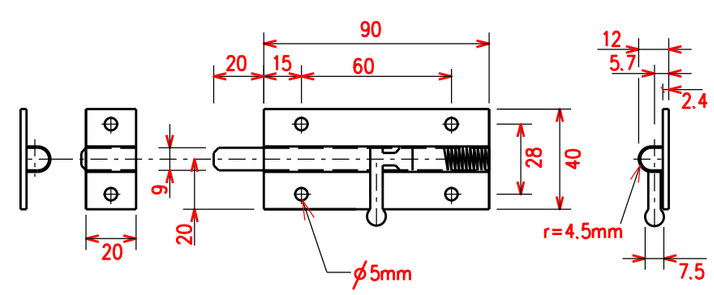

DOOR LOCK
NTS

REV	DRAWN	CHKD	APPROVED	DATE	REVISION DESCRIPTION
00	SN	--	--	--	FIRST ISSUE

CHECKED	AUTHORIZED
P MOABI --/11/2021	P Chetty --/11/2021
DRAWN	
S NSELE 17/11/2021	Eskom Distribution
SCALE 1:30	

TYPICAL GUARD HUT

WITH VERANDA
1.2m x 2.4m

SET	SHEET	REVISION
--	--	00

ER00000

A2