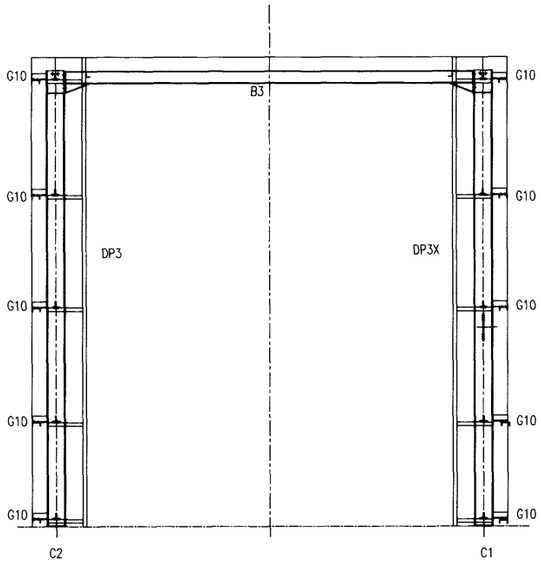

VIEW ON LINE 'A'

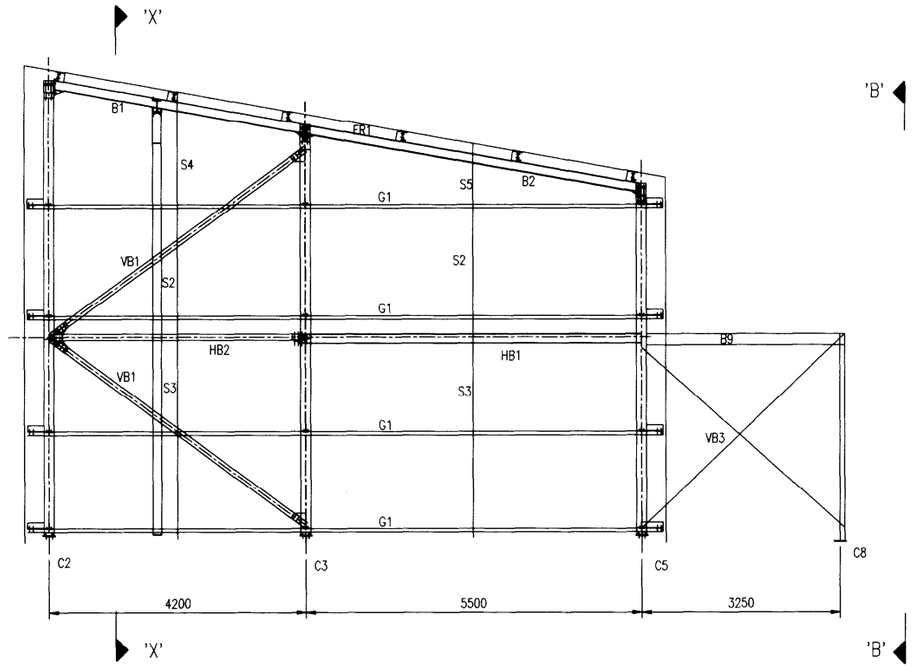

SIDE ELEVATION

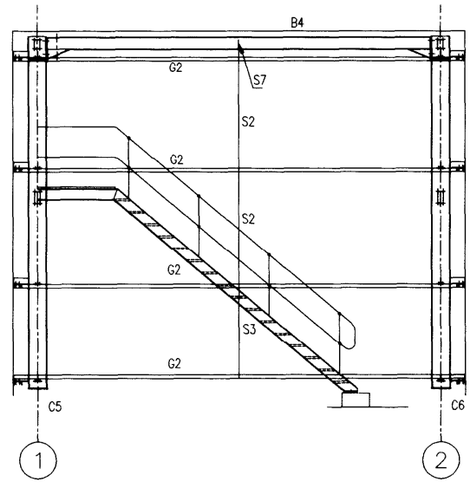

ELEVATION 'B-B'

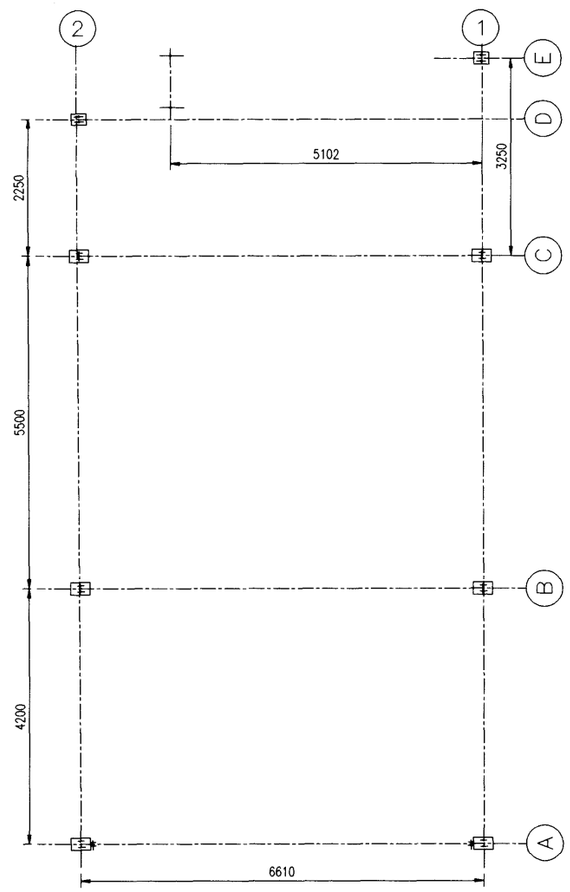

PLAN ON BASE PLATES & H.D. BOLTS

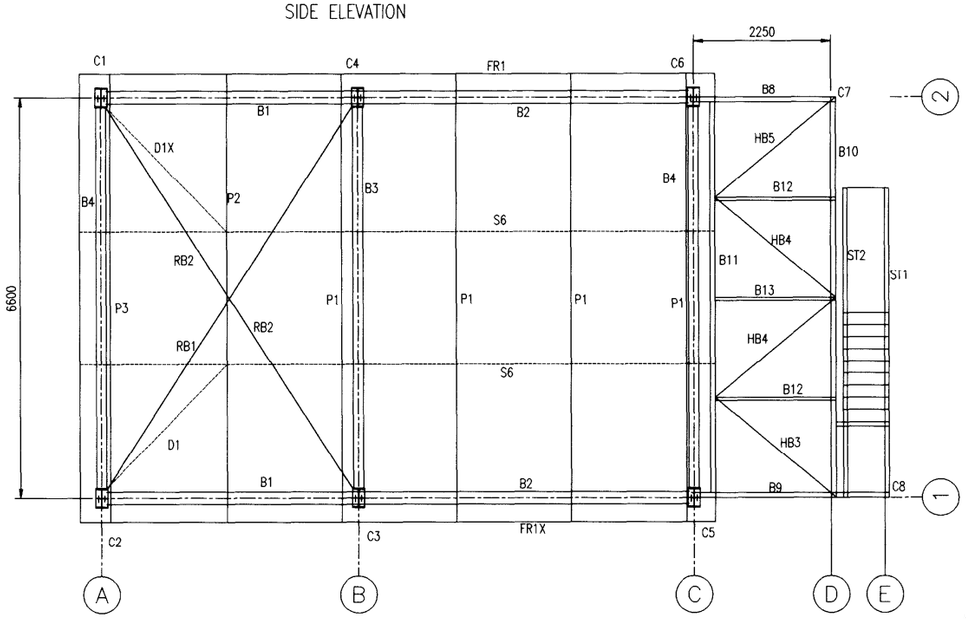

PLAN ELEVATION

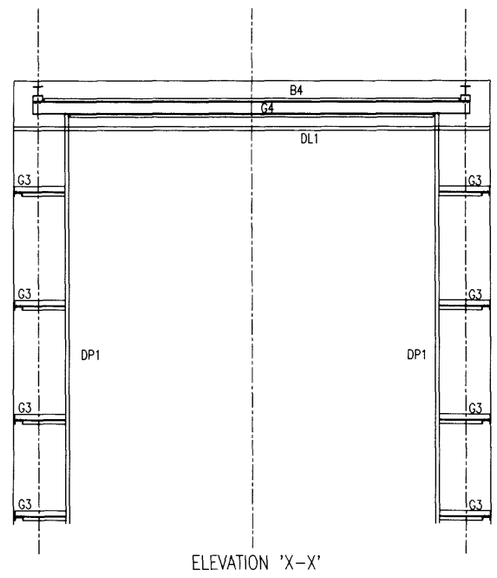

ELEVATION 'X-X'

DRG. No. A11578

NOTES

1. ALL WELDS 8mm FILLET CONTINUOS U.O.S.
2. DEBURR AND REMOVE ALL SHARP EDGES AND WELD SPLATTER.
3. ALL FASTENERS TO BE GRADE 8.8 & NUTS TO GRADE 8 HOT DIP GALVANISED.
4. ALL STEEL TO BE SABS 1431 Gr. 300WA SHOP WELDED AND SITE BOLTED.
5. PAINT SPEC. SEE SPEC.1 SUB CLAUSE 60.
6. ALL HOLES TO BE ø22 FOR M20 BOLTS U.O.S.
7. FIXINGS TO THE CONCRETE SHALL BE STAINLESS STEEL 'RAWLBOLTS' OR AN APPROVED EQUIVALENT.
8. ITEMS TO BE MEASURED ON SITE DUE TO POSSIBLE SITE DISCREPENCIES.
9. WELDING SHALL COMPLY WITH SABS 044 PART 1&2. ALL WELDS SHALL BE CONTINUOUS, FREE FROM PINHOLES & WELD SLAG.

REVISIONS

No	DATE	CHK	APPR	DESCRIPTION
1	15/11/97			AS BUILT MODS.

NUMBER	TITLE
	REFERENCE DRAWINGS

RAND WATER

BOX 1127
JOHANNESBURG
2000
TEL: 682-0911

C.M.F. HALL Pr. Eng
GENERAL MANAGER
ENGINEERING

JOB No		CHECKED	
CONTRACT No		SECTION HEAD	
SCHEME		APPROVED	Pr. Eng
DRAWN BY	AEG.	CAPACITY	CEI
DATE	3/98.	DATE	3 August 2000

DELTA-P
22/4
THIS DRAWING AND DESIGN IS THE PROPERTY OF GAUTENG UTILITY SERVICES AND MUST NOT BE COPIED OR PASSED ON TO ANY THIRD PARTY WITHOUT AUTHORITY IN WRITING.

Gauteng Utility Services
P.O. BOX 13528
Northmead
1511
Tel (011) 849-1909
Fax (011) 849-1909

APPROVED				DATE	NAME
DEPT.	DATE	SIGN	Drawn		
CLIENT			Chkd		
PROJ.MNG.			Apprvd		
PROJ.SECT.LDR					
PROJ.ENG.					
MECH.					
STRUCT.					
CIVIL					
PIPING					
PROCESS					
ELECT.					
INSTR.					

BATEMAN
MINERALS & INDUSTRIAL LIMITED
REG. No. 56/01084/06
acting for & on behalf of BATEMAN Project Holdings

ZUIKERBOSCH PUMPING STATION
1992 SCHEME LIME PLANT 1
ROAD LOADOUT HOUSING
GENERAL LAYOUT

SCALE 1:50
SHEET 1 OF 14
STATUS

M3527-B200-CAA-013

REV 0

H:\M3527\BZCAA013.DWG
0362-01

ZUIKERBOSCH PUMPING STATION
1992 SCHEME LIME PLANT 1
ROAD LOADOUT HOUSING
GENERAL LAYOUT

SCALE 1:50

STATION	WKS	DOC. TYPE	S
ZB	4004D	DMG	A

DRG. No. A11578

REVISION 0