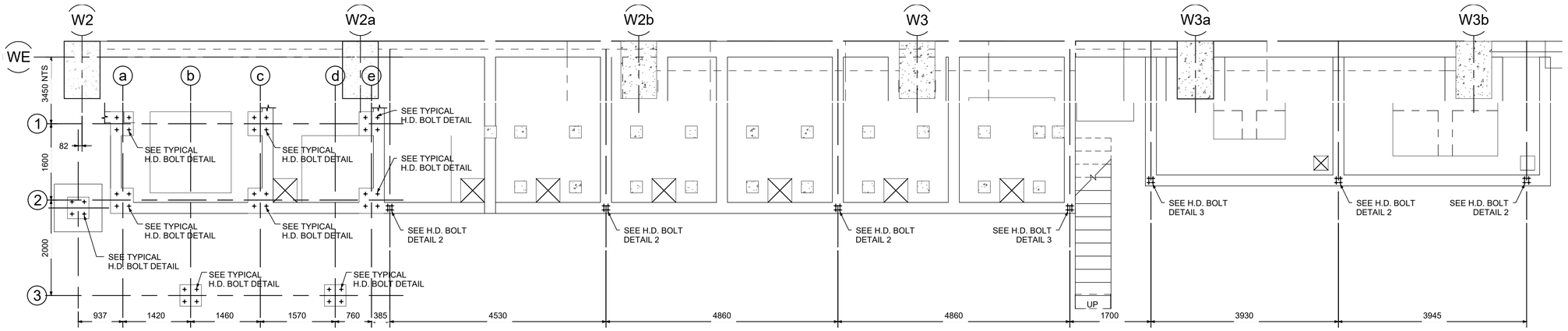

H.D. BOLTS LAYOUT

1 : 50

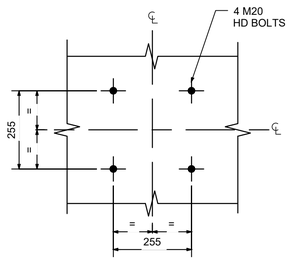

TYPICAL H.D. BOLT DETAIL

1 : 10

NOTE:
H.D. BOLTS ARE TO BE HOT DIP GALVANISED

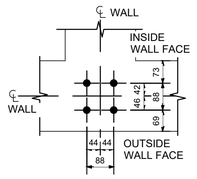

H.D. BOLTS DETAIL 2

1 : 10

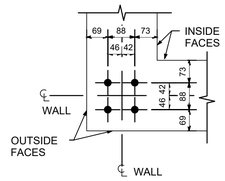

H.D. BOLTS DETAIL 3

1 : 10

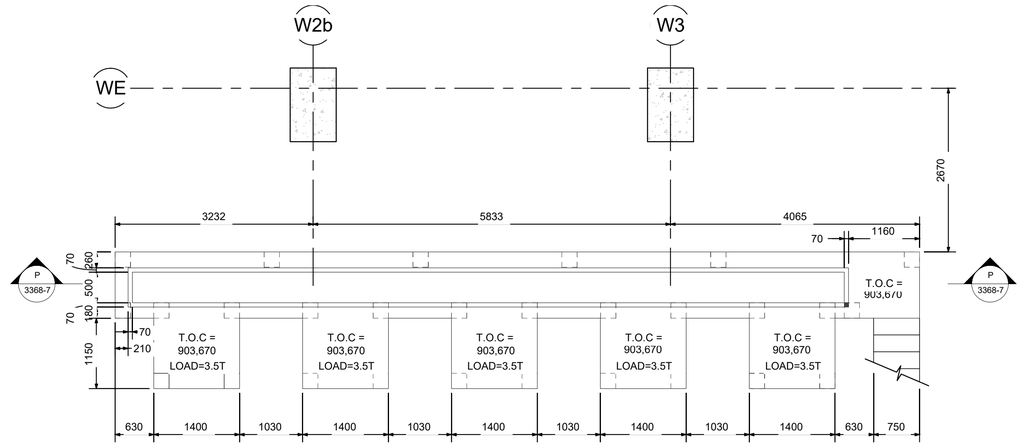

SUSPENDED FLOOR SLAB

1 : 50

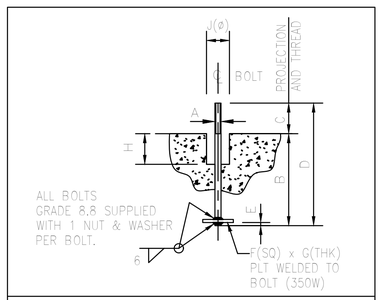

BOLT SCHEDULE FOR TYP. DETAIL

NO. REQD	A	B	C	D	E	F	G	H	J
36	M20	470	100	570	10	70	12	150	75

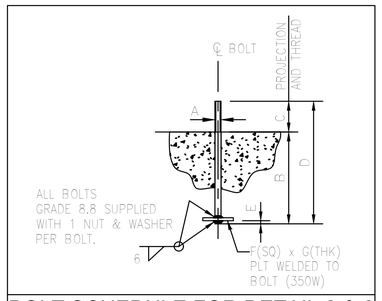

BOLT SCHEDULE FOR DETAIL 2 & 3

NO. REQD	A	B	C	D	E	F	G	H	J
28	M20	350	100	450	10	70	12		

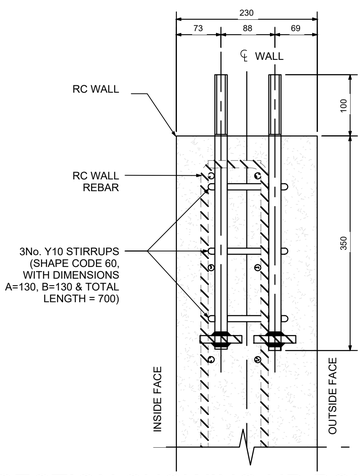

SECTION SHOWING HD BOLTS & RC WALL REBAR POSITIONS

1:10

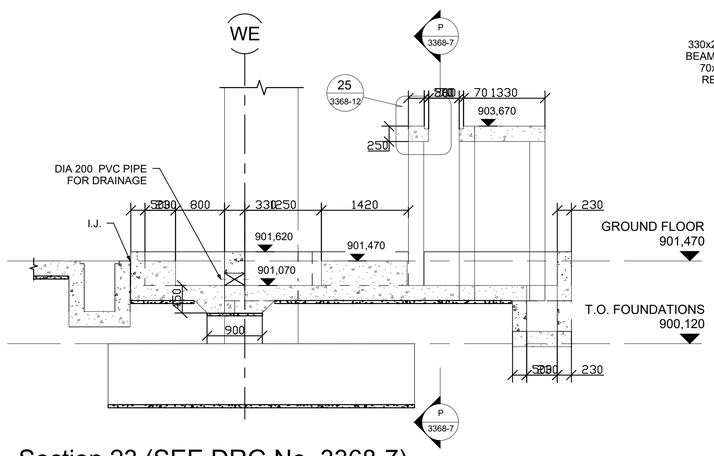

Section 23 (SEE DRG No. 3368-7)

1 : 50

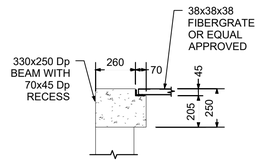

Detail 25

1 : 20

NOTES:

GENERAL NOTES:

1. THIS DRAWING SHALL BE READ IN CONJUNCTION WITH THE ARCHITECT'S DRAWINGS.
2. ALL CONCRETE MIXES TO BE APPROVED BY THE ENGINEER PRIOR TO COMMENCEMENT OF CONSTRUCTION.
3. FOUNDATION EXCAVATIONS TO BE APPROVED BY THE ENGINEER PRIOR TO CASTING OF THE BLINDING.
4. MINIMUM SAFE BEARING PRESSURE = 350kPa
5. BACKFILL TO BE CRUSHED -40mm MATERIAL COMPACTED IN LAYERS OF150mm TO 95% MOD AASHTO AT OMC TO +2%

CONCRETE NOTES:

1. CONCRETE CLASS:
   REINFORCED CONCRETE & SURFACE BEDS -CLASS 35/19
   BLINDING & SCREED -15MPa CONCRETE (28 DAYS)
   NO-FINES -NF 19
2. ALL VISIBLE CONCRETE FACE FINISHES SHOULD BE SMOOTH OFF-SHUTTER AND ALL IMPERFECTIONS SHALL BE REPAIRED.
   FOR CONCEALED MEMBERS, DEFECTS SHALL BE REPAIRED BUT NO SPECIAL TREATMENT IS REQUIRED.
3. ALL EXPOSED CONCRETE EDGES TO HAVE A 25x25mm CHAMFER.
4. ALL DIMENSIONS TO BE CONFIRMED ON SITE.
5. CONCRETE TO COMPLY WITH SANS 1200G AND ESKOM CONCRETE SPECIFICATION No. 84CIVL053.
6. CURING METHOD STATEMENT TO BE APPROVED BY THE ENGINEER.

DATA TABLE

COLUMN NUMBER	01	
COLUMN TYPE	C1	B1 — BASE SIZE
	0,000	BASE T.O.C

COLUMN SIZES

C1 = 1200 x 750 RECTANGULAR
C2 = 900 DIAMETER CIRCULAR
C3 = 533x210x101 I STEEL SECTION
C4 = 1200 x 1200 SQUARE

BASE SIZES

B1 = 4300 x 4300 x 1000 DEEP
B2 = 3300 x 3300 x 750 DEEP
B3 = 3000 x 5000 x 1000 DEEP
B4 = 9000 x 4000 x 1000 DEEP
B5 = 2000 x 2000 x 500 DEEP

STRIP FOOTING SIZES

900 x 250 DEEP FOR 330 WALLS

KKS CODE: 00UGD

AS BUILT

D.O.	REV	DATE	REVISION	REV BY	CHKD BY	AUTH BY	KKS APP	REFERENCE DRAWINGS
	6	04/04/23	AS BUILT per-P45- ECN-ASB-121	T.C.	M.M.			
	5	21/05/14	AS BUILT	B.M.				
	4	22/02/13	KKS CODE ADDED	M.M.	K.M.			
	3	25/09/12	SECTION C1 ADDED AS CLOUDED	M.M.	K.M.			3368-7 GR. FL DETAIL 3 & SECTIONS K,L,M,P

INDEX REFERENCE:

			AUTHORISED FOR ESKOM BY	DATE
DRG REGISTER				
DESIGN APPROVED	08/06/10	V.W-T	W. BEETGE	18/05/2010
KKS APP				
DO AUTH				
CHKD BY	08/06/10	K.M.		
DRAWN BY	14/05/10	M.M.		
SCALE	AS SHOWN			

Designer: V.W Taylor
Issued by Nyeleti Consulting
Marelize Mostert
PrEng no: 2001 0150

Nyeleti Engineering to Excel
UWP CONSULTING
Eskom Enterprises

MEDUPI POWER STATION
WATER TREATMENT PLANT
SUSPENDED FLOOR SLAB, SECTION 23 AND HD BOLT DETAILS

27146 - T - 019

0.84/3368

SHEET 12 REV 5

SIZE GROOTTE