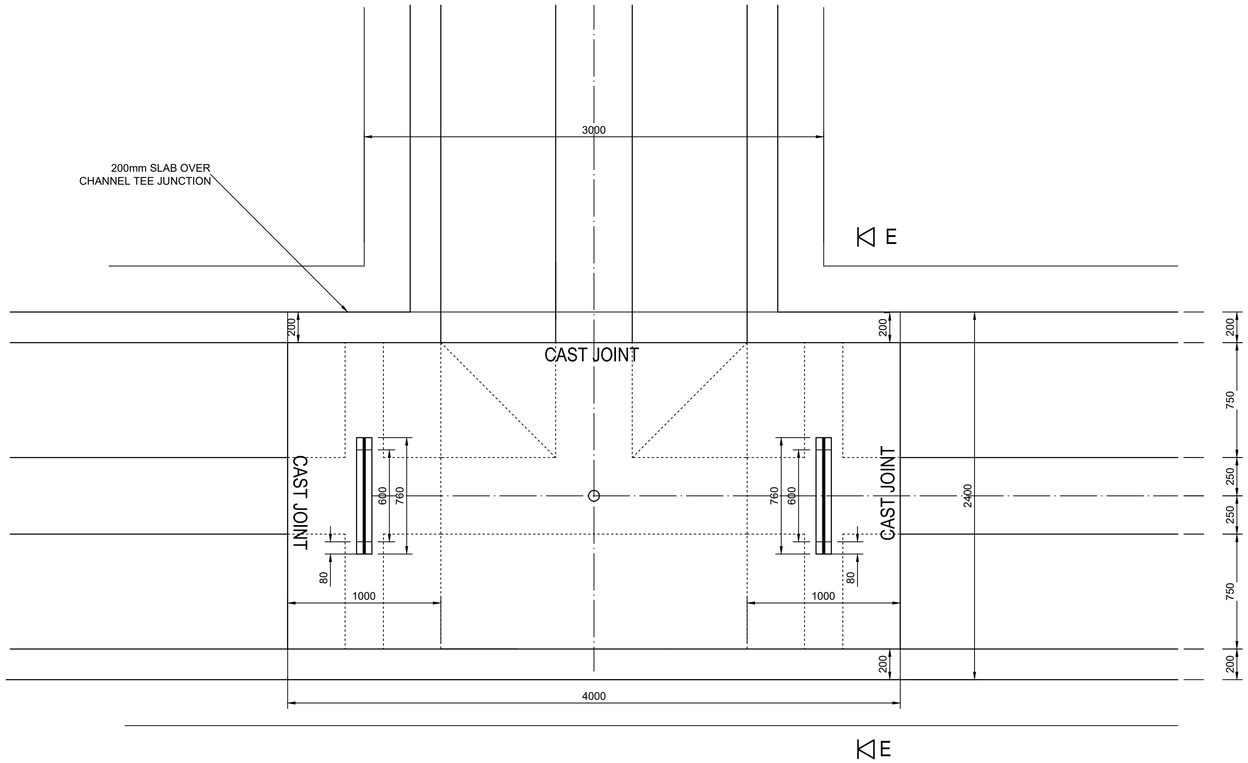

PLAN ON GATES AT MAIN CHANNEL (1:20)

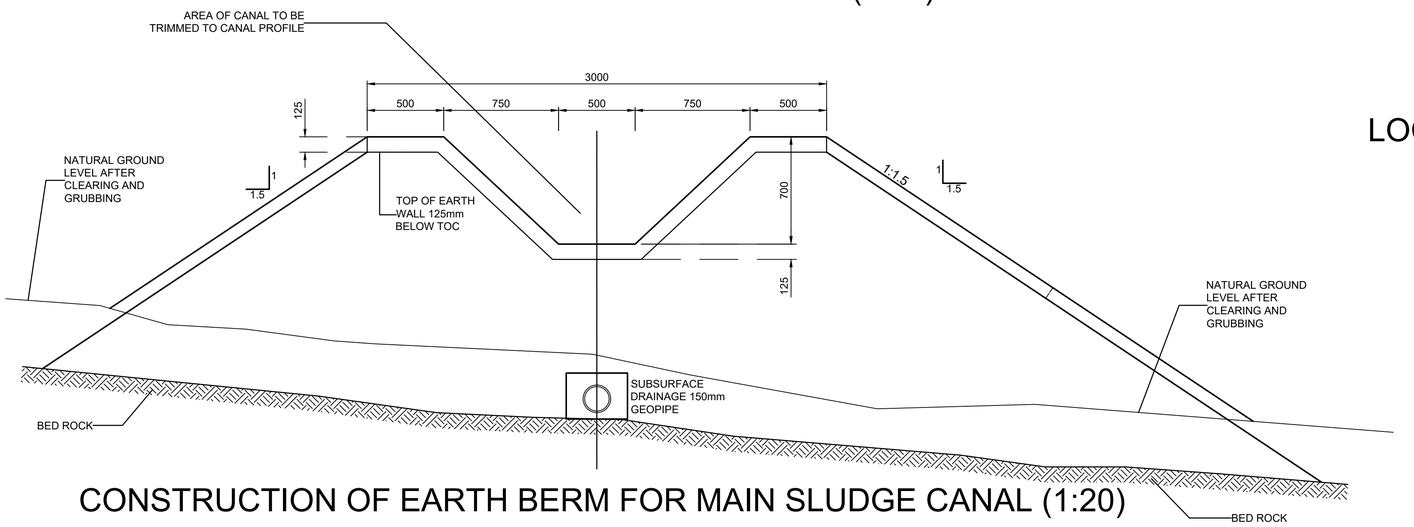

CONSTRUCTION OF EARTH BERM FOR MAIN SLUDGE CANAL (1:20)

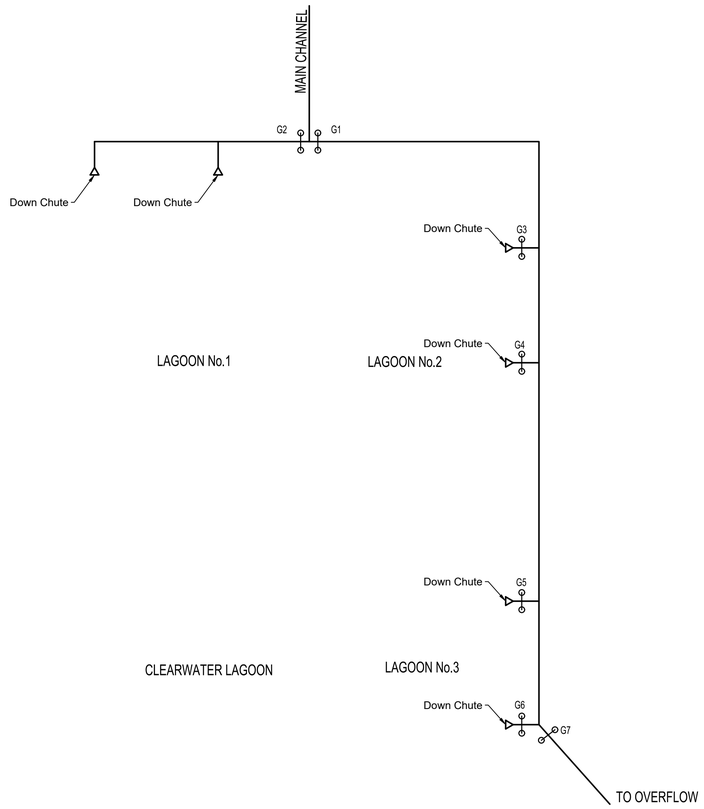

LOCALITY PLAN OF GATES (N.T.S.)

TABLE 1: MATERIAL REQUIREMENTS

No.	MATERIAL TYPE	COMPACTION	REQUIREMENTS
1	FILL	85 % OF PROCTOR DENSITY	SELECTED IN SITU SEMI PERVIUS MATERIAL AT 90% MOD AASHTO COMPACTION. AS DIRECTED ON SITE
2	GRAVEL CAPPING	95 % OF PROCTOR DENSITY	AS PER SABS. 1200 DE CLAUSE 3.2.4
3	TOPSOIL	N / A	AS PER SABS "1200 C" AND "D"

REV	DATE	CHK	APP	DESCRIPTION
1				

CLIENT: LEPELLE NORTHERN WATER — Water is our passion

MUTEO CONSULTING

39 GROBLER STREET
POLOKWANE 0699
P.O. BOX 6196
POLOKWANE NORTH
0750
TEL : (015) 291 4065
FAX : (015) 291 4043
website: www.muteo.co.za

PROJECT APPR	DATE	BY	SIGNATURE
DESIGNED		K. NKWADA Pr-Eng.	
CHECKED		H. MAKWARELA Pr-Eng.	
DRAWN		K. WOOLLEY	
PROJECT MNG.		N. CHUMA Pr-Tech.	
APPROVED		H. MAKWARELA Pr-Eng.	
CLIENT			

SCALE: DO NOT SCALE IF IN DOUBT ASK.

ALL DIMENSION IN mm UNLESS SPECIFIED OTHERWISE

TITLE: CONSTRUCTION OF SLUDGE LAGOON, PUMPSTATION AND PIPELINE
GATES ARRANGEMENTS & EARTHWALL DETAILS

PROJECT No. | DRG SIZE A0 | DRAWING No. MC/LNW-XX/12-12