GENERAL NOTES

This drawing is issued for Electrical purposes only, and should be read in conjunction with the Electrical Specification. Setting out of Electrical and Electronic accessories are to be as indicated on Architects details.

Refer to Architects and Structural Drawings for all building dimensions, latest building revisions and services.

Do not scale this drawing.

All work to comply with relevant Standards, Codes of Practice, Specification and Regulations.

Notwithstanding anything to the contrary, all rights reserved. No part of this drawing may be reproduced in any material form (incuding photo-copying or storage in any medium or by electronic means and whether or not transiently or incidently to some other use of this drawing). In addition, this drawing may not be used for any purpose or reason other than for which it was originally issued, without written permission of the author.

DRAWING NOTES

xxx

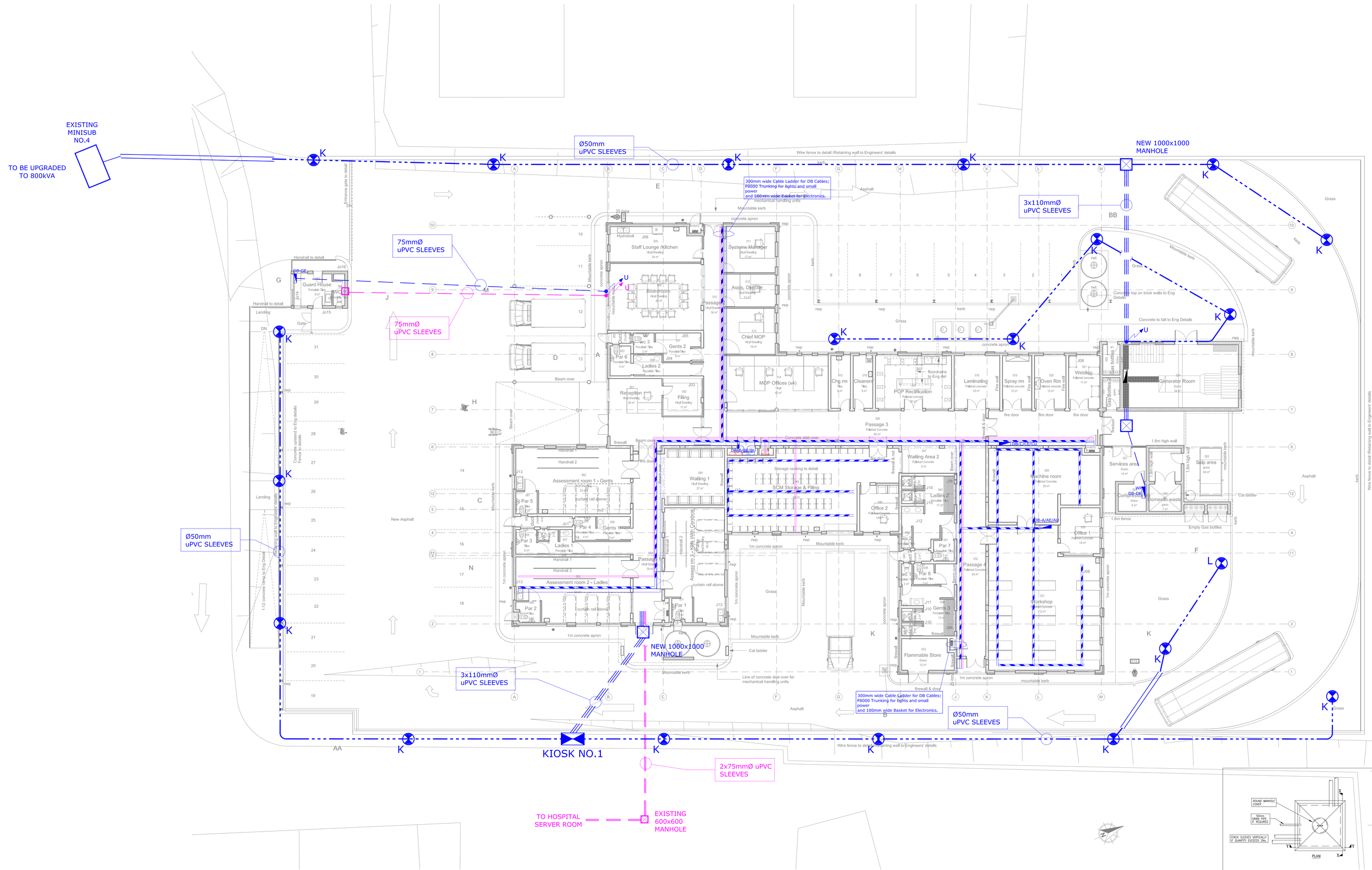

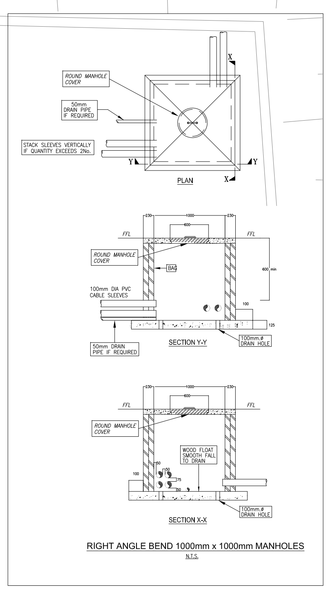

RIGHT ANGLE BEND 1000mm x 1000mm MANHOLES
N.T.S.

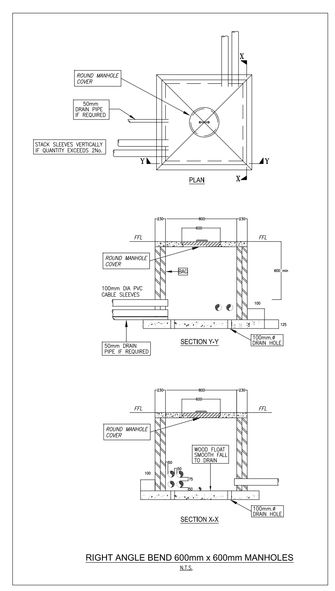

RIGHT ANGLE BEND 600mm x 600mm MANHOLES
N.T.S.

REV	DATE	BY	DESCRIPTION	CHK
H	09/05/22	RM	Revised Architect's Layout	SN
G	13/04/22	RM	Revised Architect's Layout	SN
F	29/03/22	RM	Added Cable Ladder	SN
E	28/09/21	RM	Added IT Sleeve to Guard House	SN
D	23/04/21	RM	Revised Architect's Layout	SN
C	15/03/21	RM	Revised Architect's Layout	SN
B	24/02/21	RM	Revised Architect's Layout	SN
A	23/10/20	RM	Revised Substation Position	SN
0	09/10/20	RM	Original Issue	SN

REVISIONS

IBUYA PROJECTS
"EMPOWERING DEVELOPMENT"
BLOCK D
ESSEX PARK
46 ESSEX TERRACE
WESTVILLE
P.O. BOX 1692
WANDSBECK 3631
TEL: +27 (031) 2667831
FAX: +27 (031) 2667831
E-mail: ibuya@ibuya.co.za

PROJECT/SERVICES
Ngwelezane Hospital

Electrical Services

TITLE
Site Plan showing Site Lighting, Sleeves and Manholes Layout and Details Option 4

ENGINEER:	DRAWN BY	DATE:	CHECKED	SCALE:
RSN	RM	Sept'20	RSN	1:200
				PAPER SIZE: A1

PROJECT No.	DRAWING No.	SHEET:	REV:
20013	001_4		H

FILE: LAYERS:

NOTES: (1) – Contractor to ensure max distance between draw boxes 20 metres notwithstanding anything to contrary. (2) – Draw boxes required after every second 90 deg. bend or 180 deg. total of slow bends. (3) – All unwired conduits to be provided with draw wires. These will be withdrawn and checked at random. (4) – Cast in conduits to be spaced 35mm. minimum.

- S 100x100 CONDUIT BOX.
- S 100x100 CONDUIT BOX AT 500AFFL.
- S 100x100 CONDUIT BOX AT 1400AFFL.
- L 100x50 CONDUIT BOX
- L 100x50 CONDUIT BOX AT 300AFFL.
- L 100x50 CONDUIT BOX AT 1400AFFL.
- ROUND CONDUIT BOX.
- C CLUSTER BOX (SIZE AS NOTED).

- ROUND DRAW BOX
- S 100x100 DRAW BOX
- P 100x50 BOX BEHIND POWER SKIRTING
- CONDUIT TURNED UP ("D" FOR DOWN)
- DOWN CONDUCTOR TO EARTH OR EARTH TIE.

- BM CAM etc. ROUND CONDUIT BOX FOR:
- DM – DOOR MONITOR
- CAM – CAMERA
- AA – ACCESS ALARM
- AC – ACCESS CONTROL
- CR – CARD READER
- COM – COMMUNICATION/INTERCOM
- BGM – BACK GROUND MUSIC
- EL – ELECTRIC LOCK/STRIKE

- 20mm. DIA. CONDUIT.
- 25mm. DIA. CONDUIT.
- 32mm. DIA. CONDUIT.
- 50mm. DIA. CONDUIT.
- SECTION OF CONDUIT OMMITED FOR CLARITY.
- S SURFIX
- U TWIN AND EARTH
- CABLE ROUTE

- OC OVERHEAD CAST–IN
- OS OVERHEAD ON SURFACE OR LAID ON CEILING.
- FC FLOOR SLAB CAST–IN.
- FS FLOOR SURFACE (IN FLOOR VOID).
- POWER SKIRTING
- TRUNKING
- CABLE SLEEVE.
- CABLE TRAY/LADDER

- 150 SQUARE GALV. STEEL DRAW TRAY SIZE AS SHOWN.
- TELEPHONE JUNCTION BOX.
- INTERCOM JUNCTION BOX.
- DATA/COMMS JUNCTION BOX.
- SECURITY, ETC. JUNCTION BOX
- DISTRIBUTION BOARD POSITION.
- DB–1 BOARD DESIGNATION NUMBER.

- 16A SANS 164–1 SWITCHED SOCKET OUTLET (SSO).
- 16A SANS 164–1 DOUBLE SSO.
- 16A SANS 164–1 SSO ON PEDESTAL.
- 16A SANS 164–2 3 PIN SSO.
- 16A SANS 164–1 & 164–2 COMBINATION SSO.
- 16A SANS 164–4 RED SSO (Ø SHAVED EARTH PIN)
- 16A SANS 164–4 RED SSO ON PEDISTAL
- 3 PHASE C–FORM SSO.
- 2 POLE ISOLATOR
- 3 POLE ISOLATOR
- 4 POLE ISOLATOR

- 6A SANS 164–3 U/S SOCKET OUTLET.
- SINGLE LEVER ONE WAY LIGHT SWITCH.
- INTERMEDIATE LIGHT SWITCH
- TWO WAY LIGHT SWITCH
- MOTION SENSOR
- LIGHT SWITCH WITH MOTION SENSOR

- LINEAR LUMINAIRE.
- BULKHEAD/DOWNLIGHTER, ETC.
- WALL MOUNTED LUMINAIRES
- POLE MOUNTED LUMINAIRE.

- TELEPHONE POINT.
- TELEPHONE POINT ON PEDESTAL.
- DIRECT OUTSIDE LINE TELEPHONE POINT (CALL BOX).
- TV OUTLET.
- DATA/COMMS OUTLET.

- BELL PUSH.
- BELL OUTLET.
- SIGN POINT.
- CLOCK OUTLET.
- PHOTOCELL

- 3 REFERENCE TO QUANTITY i.e. 3No.
- 2 REFERENCE TO A DETAIL i.e. DETAIL 2.
- 4 REFERENCE TO AN ELECTRICAL NOTE i.e. NOTE 4.
- 34 REFERENCE TO A STANDARD DRAWING i.e. STANDARD DRAWING No.34

- 6 CABLE NUMBER – REFER CABLE SCHEDULE FOR DETAILS.
- B LUMINAIRE TYPE "B" – REFER LUMINAIRE SCHEDULE.

A1_MST_1