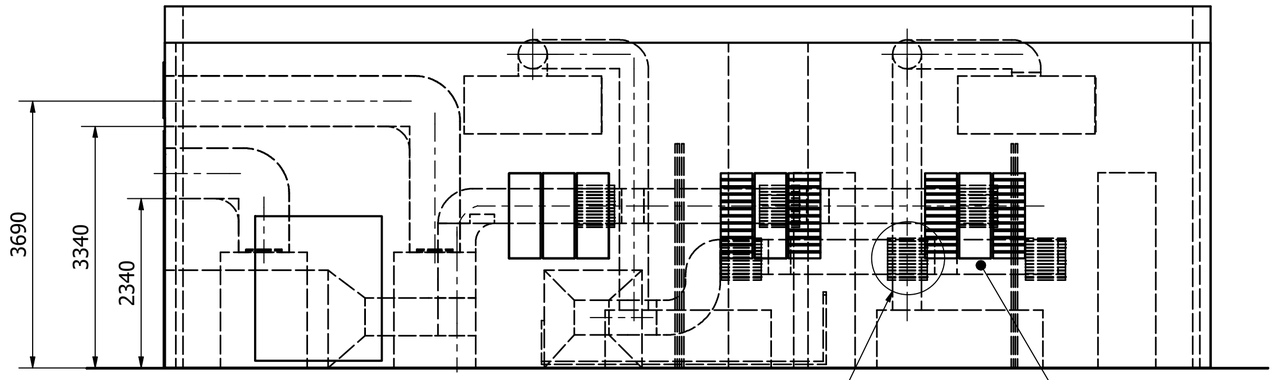

FRONT VIEW
SCALE : N.T.S

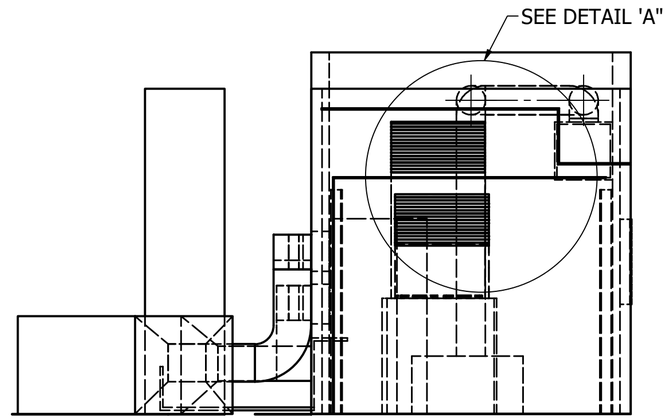

SIDE VIEW
SCALE : N.T.S

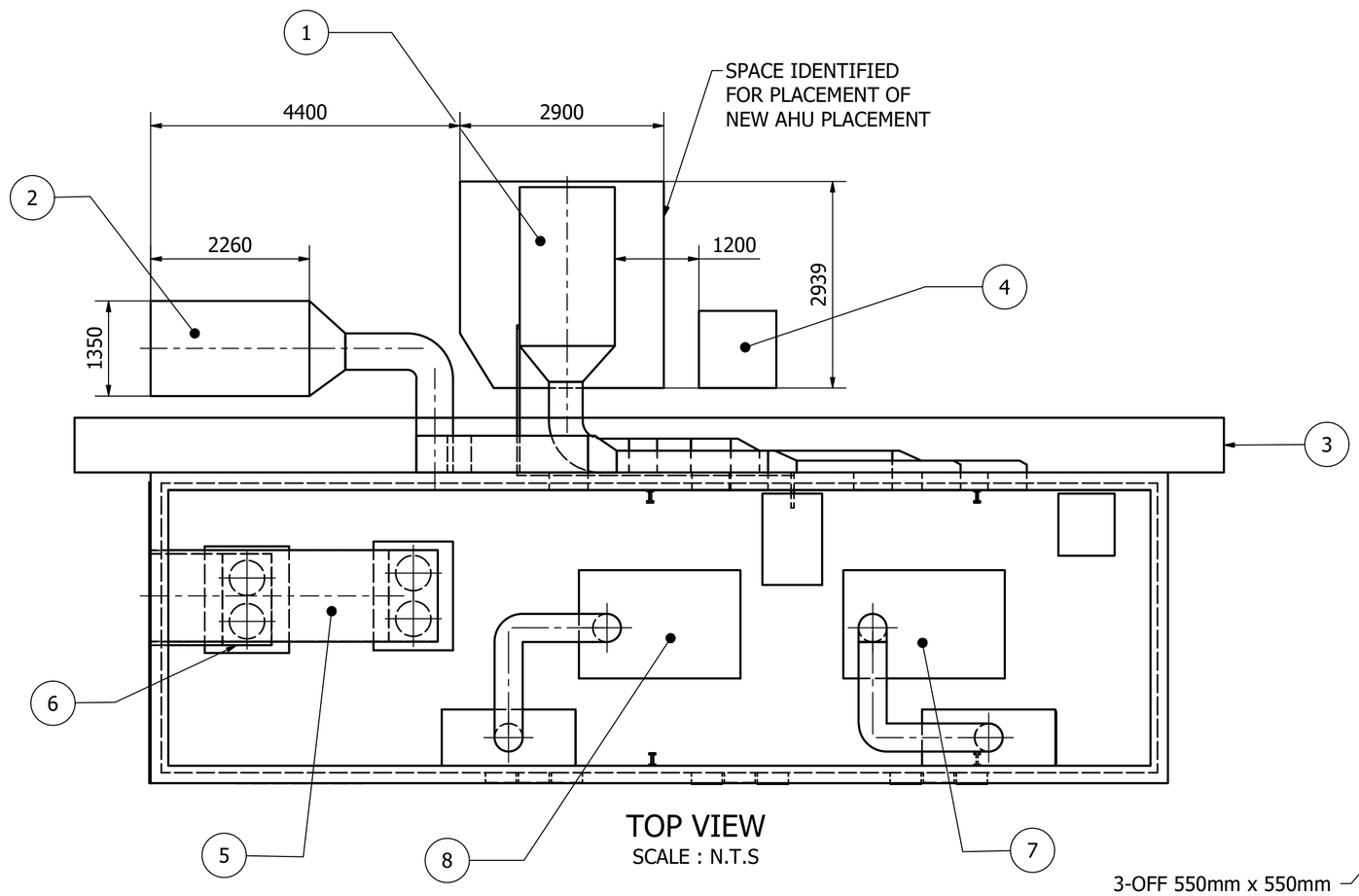

TOP VIEW
SCALE : N.T.S

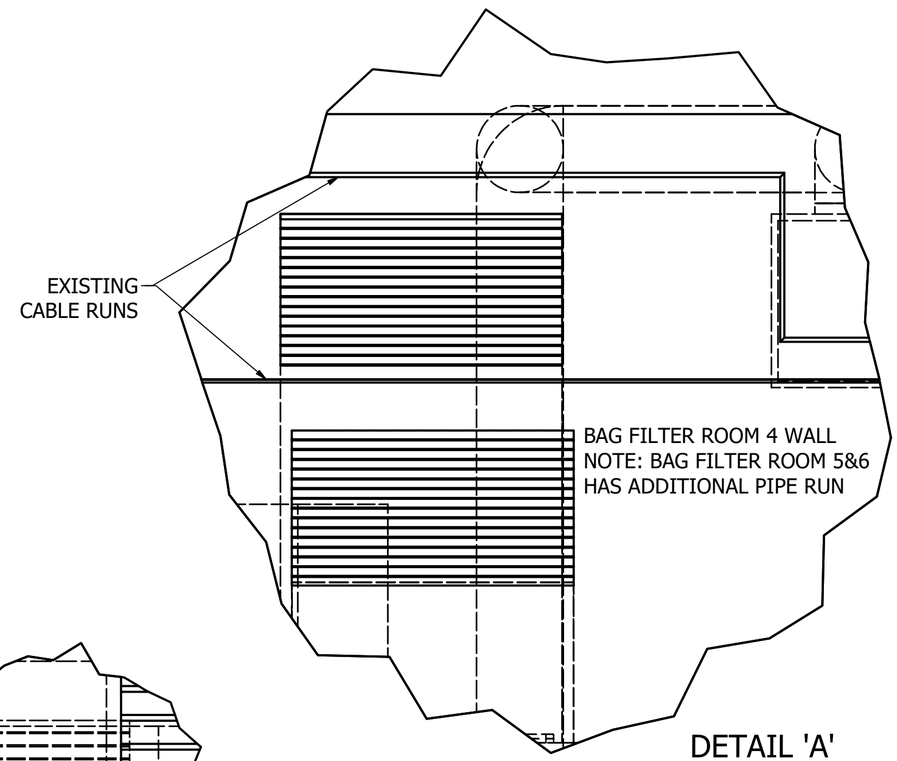

DETAIL 'A'
SCALE 1:20

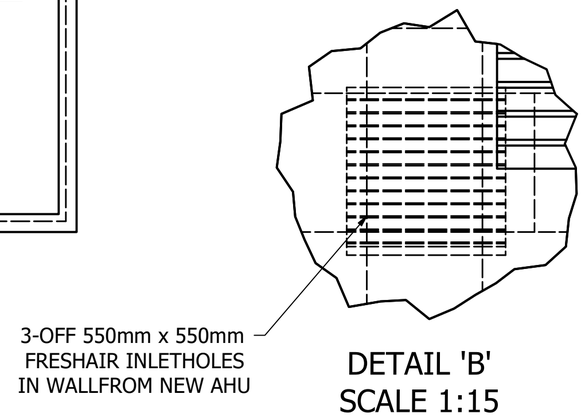

DETAIL 'B'
SCALE 1:15

D.O.	REV	DATE	** REVISION **	REV BY	CHKD BY	AUTH BY	KKS APP	REFERENCE DRAWINGS
26		-- -- --						
26	0	-- -- --	FIRST ISSUE					

AUTHORISED BY :
APPROVED BY :

KKS APP	-- -- --	
CHKD BY	05 06 21	C.C.
DRAWN BY	22 07 21	T.W.H
SCALE	SHWN	

ESKOM HOLDINGS LTD.
REG. No.
2002/015527/06

Eskom

ARNOT_POWER_STATION
GENERAL ARRANGEMENT OF
BAG FILTER ROOM VENTILATION
IMPROVEMENT COMPONENTS
SHEET 1 OF 6

26.41/57037

REV 00