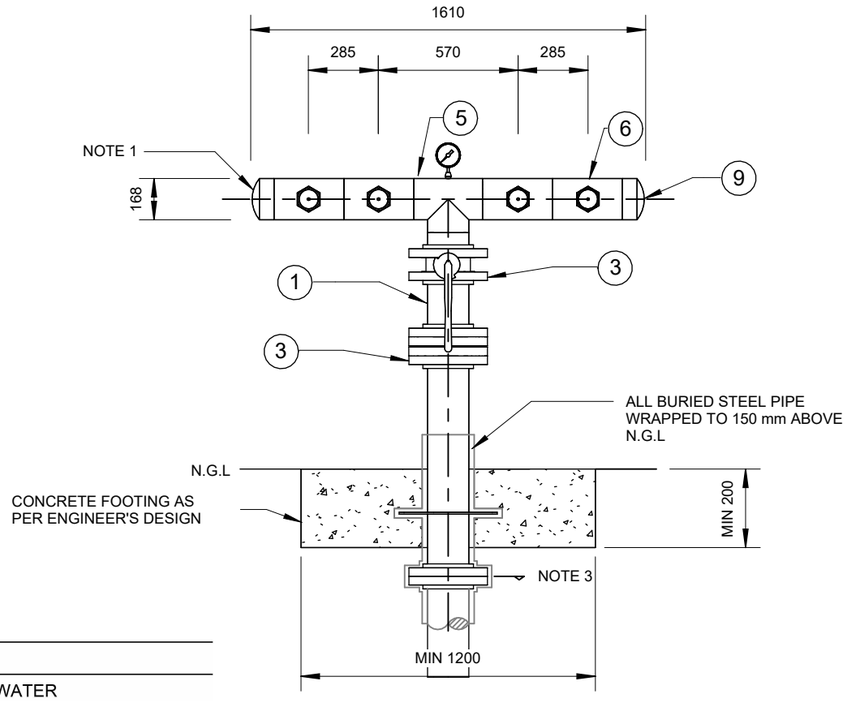

FRONT VIEW

SCALE: N.T.S

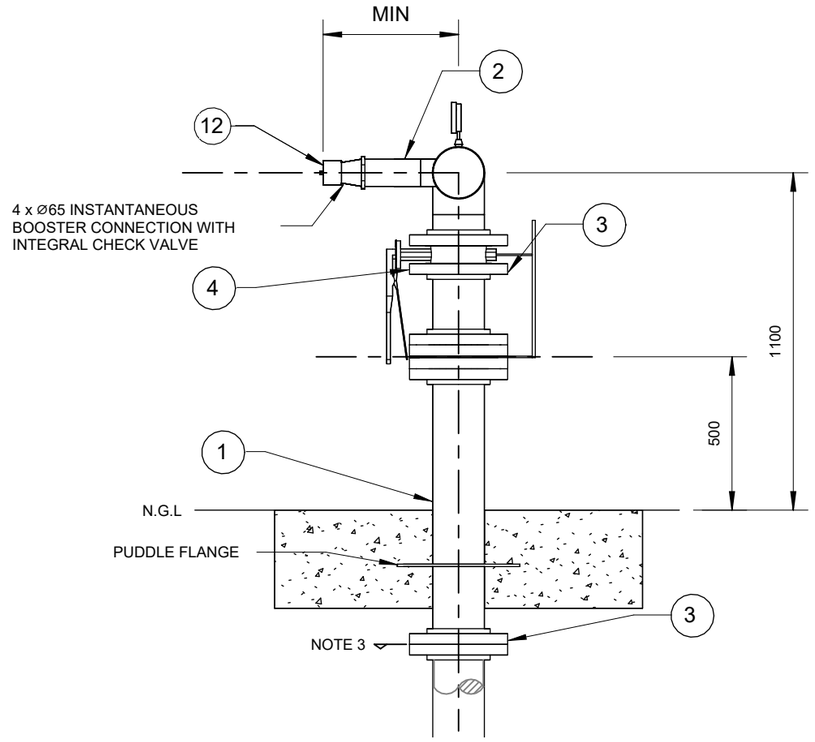

SIDE VIEW

SCALE: N.T.S

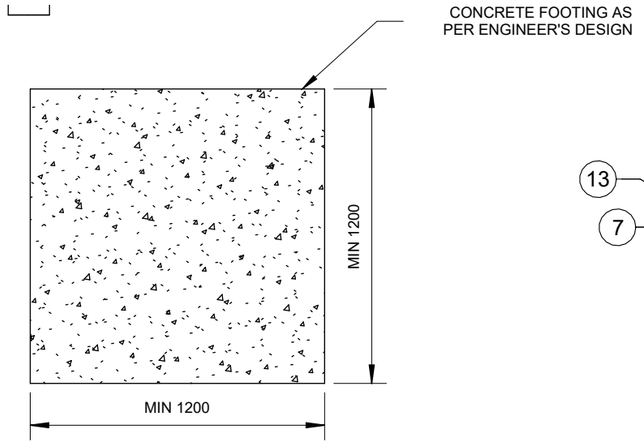

PLAN ON CONCRETE FOOTING

SCALE: N.T.S

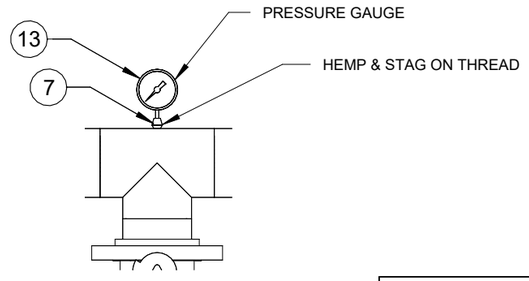

PRESSURE GAUGE DETAIL

SCALE: N.T.S

DRAWING NOTES

1. DRILL AND TAP END CAP TO SUIT 150NB PLUG. SUPPLY AND INSTALL PLUG USING HEMP AND STAG.
2. CONTRACTOR TO DESIGN PUDDLE FLANGE DETAIL AND SUBMIT FOR ACCEPTANCE. PUDDLE FLANGE TO BE CENTERED IN CONCRETE FOOTING.
3. REFER TO ISOMETRIC FOR CONTINUATION DETAILS.
4. CONTRACTOR TO DETERMINE DURING DETAILED DESIGN.

PL SPECIFICATIONS

PL 898	BUTTERFLY VALVE SPECIFICATION
PL 909	PRESSURE GAUGE SPECIFICATION
PL 910	FIRE DEPARTMENT INTERFACE EQUIPMENT SPECIFICATION
PL 912	PIPING SUPPLY AND INSTALLATION SPECIFICATION

PROCESS DATA	
PROCESS FLUID	WATER
DESIGN PRESSURE	NOTE 4 - REFER PL 912
TEST PRESSURE	NOTE 4 - REFER PL 912
DESIGN TEMP	NOTE 4 - REFER PL 912
FLUID GROUP	NOTE 4
SANS 347 CAT	NOTE 4
CORROSION PROTECTION SYSTEM	REFER PL 912

BILL OF MATERIALS

ITEM	MATERIAL	DESCRIPTION
1	IN ACCORDANCE WITH PL 912	150NB CARBON STEEL PIPE
2	IN ACCORDANCE WITH PL 912	80NB CARBON STEEL PIPE
3	IN ACCORDANCE WITH PL 912	150NB SLIP-ON RAISED FACE FLANGE
4	IN ACCORDANCE WITH PL 898	150NB BUTTERFLY VALVE
5	IN ACCORDANCE WITH PL 912	150NB EQUAL TEE
6	IN ACCORDANCE WITH PL 912	150x80NB REDUCING TEE
7	IN ACCORDANCE WITH PL 912	150x15 THREDOLET
8	IN ACCORDANCE WITH PL 912	150NB GASKET 3mm THICK
9	IN ACCORDANCE WITH PL 912	150NB END CAP
10	IN ACCORDANCE WITH PL 912	COMPLETE BOLTS, NUTS AND WASHERS SET TO SUIT 150NB FLANGE
11	IN ACCORDANCE WITH PL 912	COMPLETE BOLTS, NUTS AND WASHERS SET TO SUIT 80NB FLANGE
12	IN ACCORDANCE WITH PL 910	BOOSTER CONNECTION
13	IN ACCORDANCE WITH PL 909	PRESSURE GAUGE

DESIGNER			
RESP. ENG			
PROJ. MANAGER			
CLIENT			
ROLE	NAME	SIGN	DATE

DRAWING APPROVAL STATUS

PROJECT:
TRANSNET PIPELINES
HW FIRE

A3

TITLE:
FIRE RING MAIN BOOSTER CONNECTION TYPICAL DRAWING

SCALE: As indicated	CHECKED: BJ	APPROVED: BJ
CAD FILE: HO1436-TPL_2024_09_0008_77334_RFP-FAT-0001	DESIGN-DRAWN: HS - HS	DATE: 2025-07-14
PROJECT No: 11364	DRAWING No: 11364-A1075	REV: B

GREYJONES (PTY) LTD.
admin@greyjones.co.za www.greyjones.co.za
(031) 816 9386

REVISIONS

REV	DATE	BY	CHK	DESCRIPTION
A	2025-07-18	HS	BJ	ISSUED FOR ACCEPTANCE
B	2025-09-10	HS	BJ	ISSUED AFTER PJ COMMENTS

TRANSNET pipelines

PROJECT NAME
HW FIRE

DRAWN		REF.	
TRACED		DATE	
CHECKED		APPROVED	
SCALE			
TPL DRAWING No. HO1436-TYP-FP-DE-0001			REV

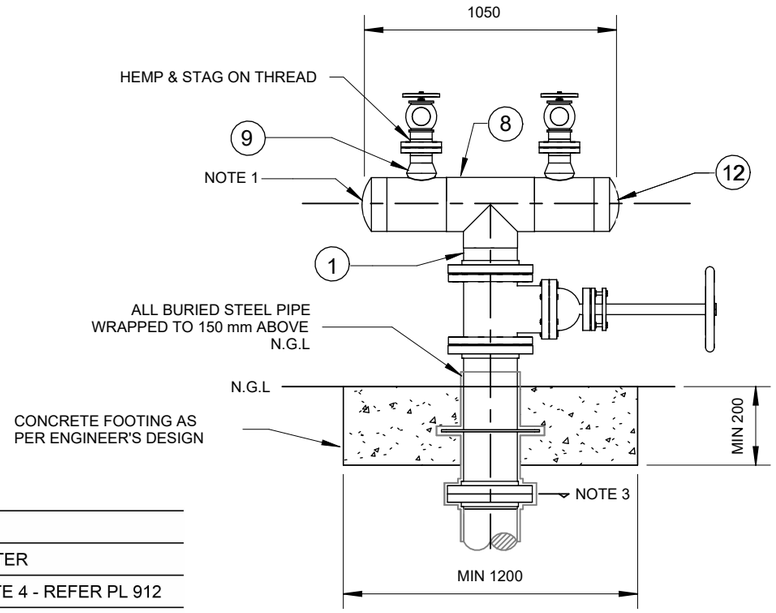

FRONT VIEW

SCALE: N.T.S

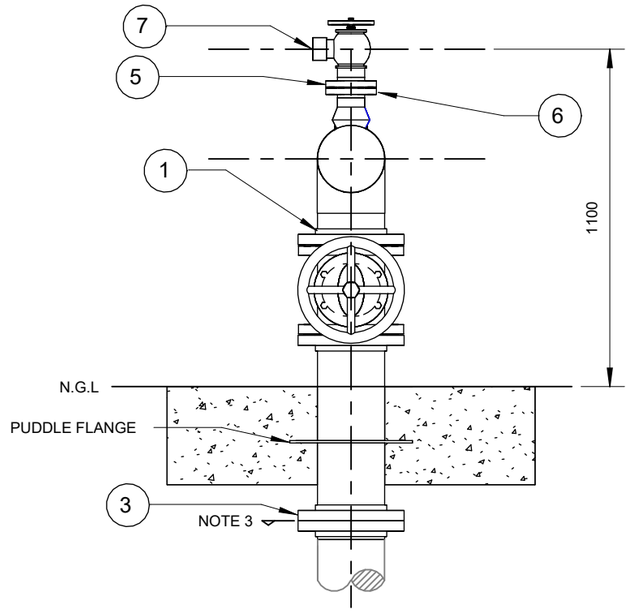

SIDE VIEW

SCALE: N.T.S

DRAWING NOTES

1. DRILL AND TAP END CAP TO SUIT 150NB PLUG. SUPPLY AND INSTALL PLUG USING HEMP AND STAG.
2. CONTRACTOR TO DESIGN PUDDLE FLANGE DETAIL AND SUBMIT FOR ACCEPTANCE. PUDDLE FLANGE TO BE CENTERED IN CONCRETE FOOTING.
3. REFER TO ISOMETRIC FOR CONTINUATION DETAILS.
4. CONTRACTOR TO DETERMINE DURING DETAILED DESIGN.

PL SPECIFICATIONS

PL 900	GATE VALVE SPECIFICATION
PL 910	FIRE DEPARTMENT INTERFACE EQUIPMENT SPECIFICATION
PL 912	PIPING SUPPLY AND INSTALLATION SPECIFICATION

PROCESS DATA	
PROCESS FLUID	WATER
DESIGN PRESSURE	NOTE 4 - REFER PL 912
TEST PRESSURE	NOTE 4 - REFER PL 912
DESIGN TEMP	NOTE 4 - REFER PL 912
FLUID GROUP	NOTE 4
SANS 347 CAT	NOTE 4
CORROSION PROTECTION SYSTEM	REFER PL 912

BILL OF MATERIALS

ITEM	MATERIAL	DESCRIPTION
1	IN ACCORDANCE WITH PL 912	200NB CARBON STEEL PIPE
2	IN ACCORDANCE WITH PL 912	80NB CARBON STEEL PIPE
3	IN ACCORDANCE WITH PL 912	200NB SLIP-ON RAISED FACE FLANGE
4	IN ACCORDANCE WITH PL 900	200NB GATE VALVE
5	IN ACCORDANCE WITH PL 912	80NB SLIP-ON RAISED FACE FLANGE
6	IN ACCORDANCE WITH PL 912	80NB THREADED RAISED FACE FLANGE
7	IN ACCORDANCE WITH PL 910	HYDRANT VALVE
8	IN ACCORDANCE WITH PL 912	200NB EQUAL TEE
9	IN ACCORDANCE WITH PL 912	200x80 WELDOLET
10	IN ACCORDANCE WITH PL 912	200NB GASKET 3mm THICK
11	IN ACCORDANCE WITH PL 912	80NB GASKET 3mm THICK
12	IN ACCORDANCE WITH PL 912	200NB END CAP
13	IN ACCORDANCE WITH PL 912	COMPLETE NUTS, BOLTS AND WASHERS SETS TO SUIT 80NB FLANGE
14	IN ACCORDANCE WITH PL 912	COMPLETE NUTS, BOLTS AND WASHERS SETS TO SUIT 200NB FLANGE

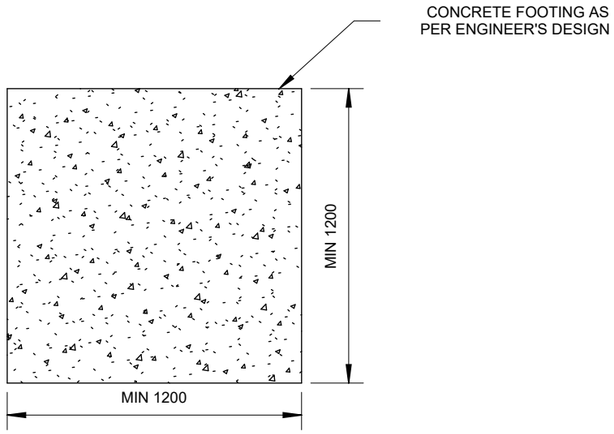

PLAN ON CONCRETE FOOTING

SCALE: N.T.S

DESIGNER			
RESP. ENG			
PROJ. MANAGER			
CLIENT			
ROLE	NAME	SIGN	DATE

DRAWING APPROVAL STATUS

PROJECT:
TRANSNET PIPELINES
HW FIRE

A3

TITLE:
FIRE SERVICE SUCTION TYPICAL DRAWING

SCALE	CHECKED:	APPROVED:
As indicated	BJ	BJ
CAD FILE: HO1436-TPL_2024_09_0008_77334_RFP-FAT-0001	DESIGN-DRAWN: HS - HS	DATE: 2025-07-14
PROJECT No: 11364	DRAWING No: 11364-A1076	REV: B

GREYJONES (PTY) LTD.

GREYJONES (PTY) LTD.

admin@greyjones.co.za www.greyjones.co.za

(031) 816 9386

REVISIONS

REV	DATE	BY	CHK	DESCRIPTION
A	2025-07-18	HS	BJ	ISSUED FOR ACCEPTANCE
B	2025-09-10	HS	BJ	ISSUED AFTER PJ COMMENTS

TRANSNET pipelines

PROJECT NAME
HW FIRE

DRAWN		REF.	
TRACED		DATE	
CHECKED		APPROVED	
SCALE			
TPL DRAWING No. HO1436-TYP-FP-DE-0002			REV

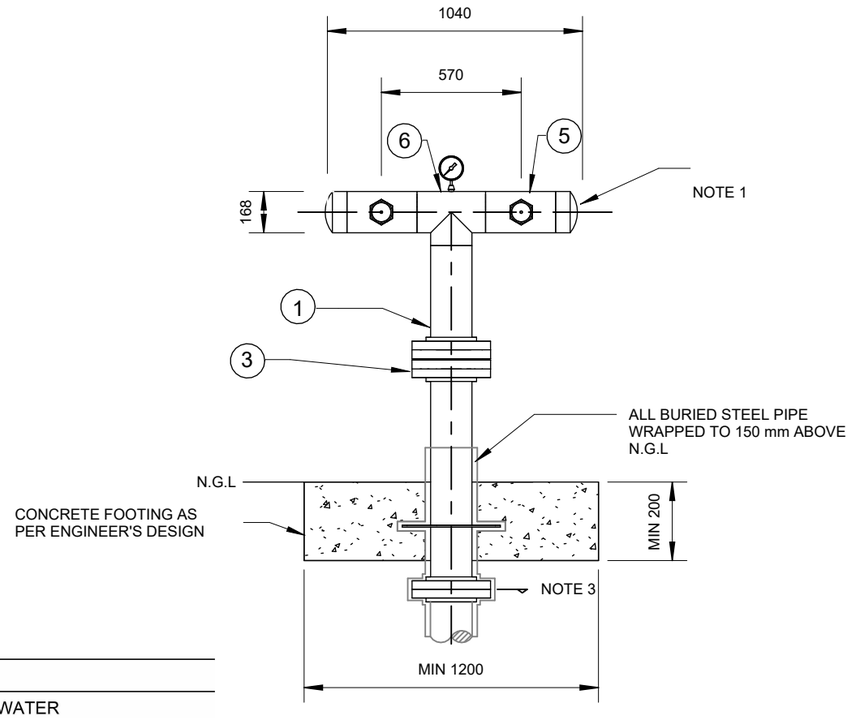

FRONT VIEW

SCALE: N.T.S

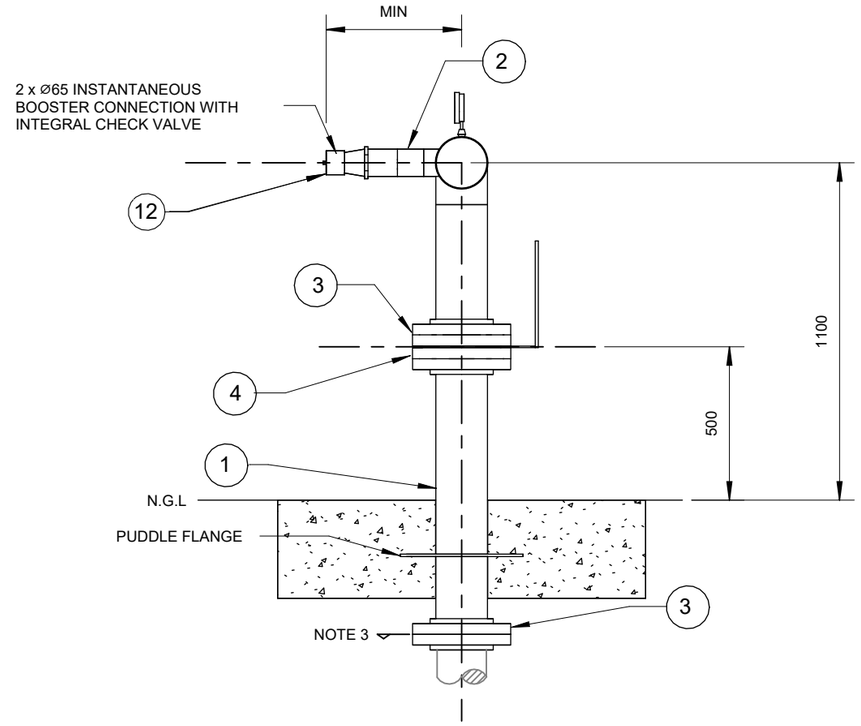

SIDE VIEW

SCALE: N.T.S

DRAWING NOTES

1. DRILL AND TAP END CAP TO SUIT 150NB PLUG. SUPPLY AND INSTALL PLUG USING HEMP AND STAG.
2. CONTRACTOR TO DESIGN PUDDLE FLANGE DETAIL AND SUBMIT FOR ACCEPTANCE. PUDDLE FLANGE TO BE CENTERED IN CONCRETE FOOTING.
3. REFER TO ISOMETRIC FOR CONTINUATION DETAILS.
4. CONTRACTOR TO DETERMINE DURING DETAILED DESIGN.

PL SPECIFICATIONS

PL 898	BUTTERFLY VALVE SPECIFICATION
PL 909	PRESSURE GAUGE SPECIFICATION
PL 910	FIRE DEPARTMENT INTERFACE EQUIPMENT SPECIFICATION
PL 912	PIPING SPECIFICATION PIPING SUPPLY AND INSTALLATION SPECIFICATION

PROCESS DATA	
PROCESS FLUID	WATER
DESIGN PRESSURE	NOTE 4 - REFER PL 912
TEST PRESSURE	NOTE 4 - REFER PL 912
DESIGN TEMP	NOTE 4 - REFER PL 912
FLUID GROUP	NOTE 4
SANS 347 CAT	NOTE 4
CORROSION PROTECTION SYSTEM	REFER PL 912

BILL OF MATERIALS

ITEM	MATERIAL	DESCRIPTION
1	IN ACCORDANCE WITH PL 912	100NB CARBON STEEL PIPE
2	IN ACCORDANCE WITH PL 912	80NB CARBON STEEL PIPE
3	IN ACCORDANCE WITH PL 912	100NB SLIP-ON RAISED FACE FLANGE
4	IN ACCORDANCE WITH PL 898	100NB BUTTERFLY VALVE
5	IN ACCORDANCE WITH PL 912	100NB EQUAL TEE
6	IN ACCORDANCE WITH PL 912	100x80NB REDUCING TEE
7	IN ACCORDANCE WITH PL 912	100x15 THREDOLET
8	IN ACCORDANCE WITH PL 912	100NB GASKET 3mm THICK
9	IN ACCORDANCE WITH PL 912	100NB END CAP
10	IN ACCORDANCE WITH PL 912	COMPLETE BOLTS, NUTS AND WASHERS SET TO SUIT 150NB FLANGE
11	IN ACCORDANCE WITH PL 912	COMPLETE BOLTS, NUTS AND WASHERS SET TO SUIT 80NB FLANGE
12	IN ACCORDANCE WITH PL 910	BOOSTER CONNECTION
13	IN ACCORDANCE WITH PL 909	PRESSURE GAUGE

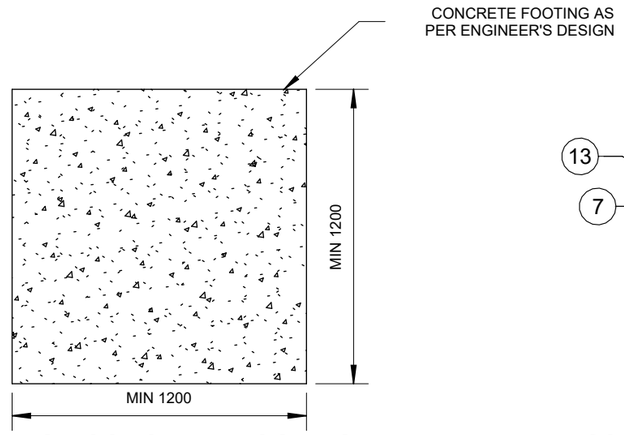

PLAN ON CONCRETE FOOTING

SCALE: N.T.S

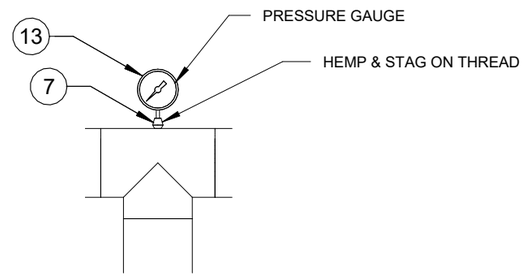

PRESSURE GAUGE DETAIL

SCALE: N.T.S

DESIGNER			
RESP. ENG			
PROJ. MANAGER			
CLIENT			
ROLE	NAME	SIGN	DATE

DRAWING APPROVAL STATUS

PROJECT:
TRANSNET PIPELINES
HW FIRE

A3

TITLE:
FIRE WATER TANK REFILL CONNECTION

SCALE: As indicated	CHECKED: BJ	APPROVED: BJ
CAD FILE: HO1436-TPL_2024_09_0008_77334_RFP-FAT-0001	DESIGN-DRAWN: HS - HS	DATE: 2025-07-14
PROJECT No: 11364	DRAWING No: 11364-A1077	REV: B

GREYJONES (PTY) LTD.

GREYJONES (PTY) LTD.

admin@greyjones.co.za www.greyjones.co.za

(031) 816 9386

REVISIONS

REV	DATE	BY	CHK	DESCRIPTION
A	2025-07-18	HS	BJ	ISSUED FOR ACCEPTANCE
B	2025-09-10	HS	BJ	ISSUED AFTER PJ COMMENTS

TRANSNET pipelines

PROJECT NAME
HW FIRE

DRAWN		REF.	
TRACED		DATE	
CHECKED		APPROVED	
SCALE			
TPL DRAWING No. HO1436-TYP-FP-DE-0003			REV

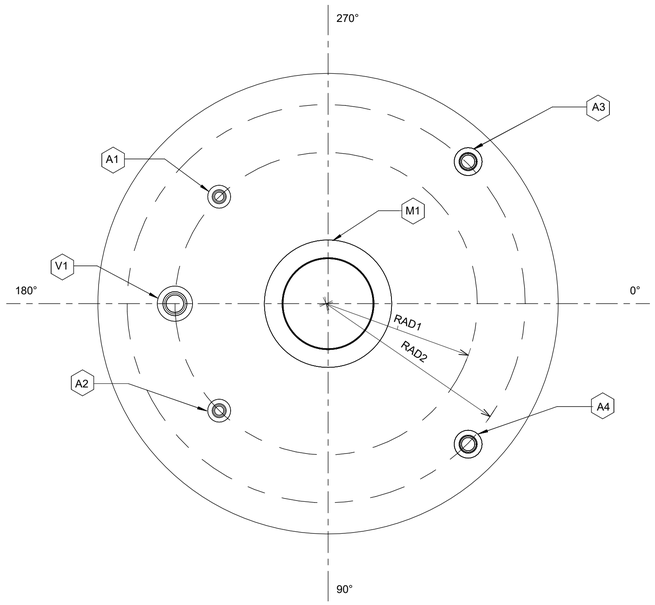

PLAN ON ROOF OF TANK

SCALE: N.T.S

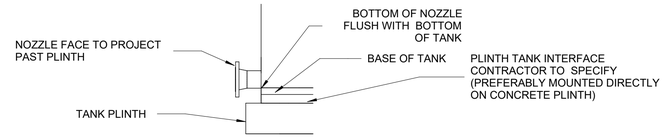

DETAIL A

SCALE: N.T.S

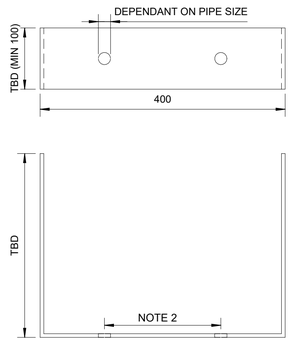

DETAIL FOR PIPE SUPPORT

SCALE: N.T.S

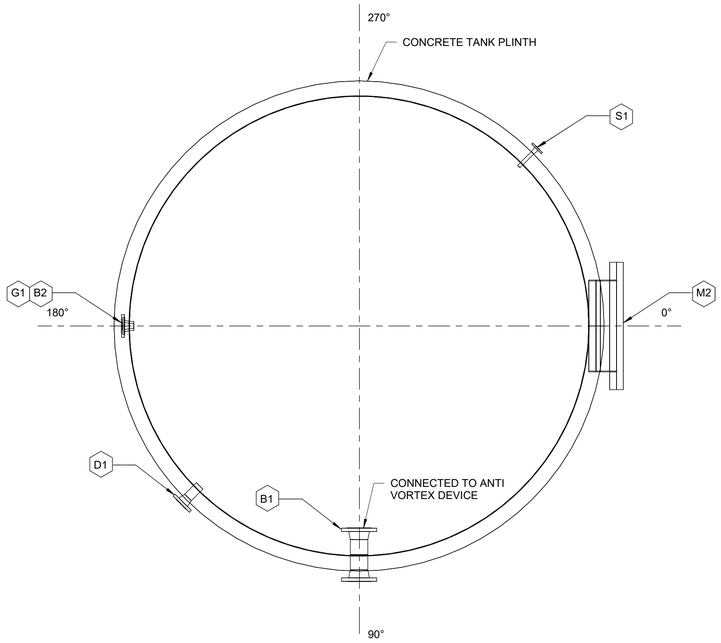

PLAN ON BOTTOM OF TANK

SCALE: N.T.S

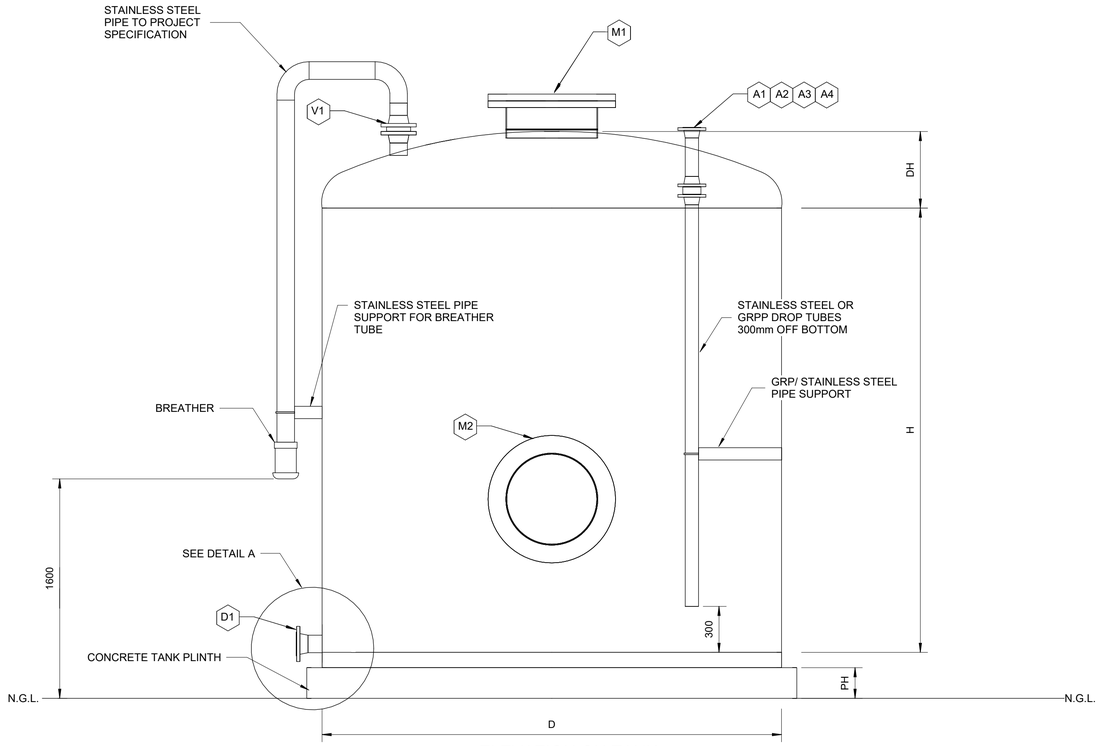

ELEVATION ON TANK

SCALE: N.T.S

NOZZLE SCHEDULE

NOZZLE			ANSI FLANGE		DESCRIPTION	POSITION				
MARK	DN	SCH	CLASS	TYPE		POSITION	ORIENTATION	ELEVATION	RADIUS	PROJECTION
A1	50	10S	150	WNRF	FOAM FILLING INLET NOZZLE	TBD	TBD	TANK ROOF	TBD	TBD
A2	TBD	10S	150	WNRF	PROCESS INLET	TBD	TBD	TANK ROOF	TBD	TBD
A3	TBD	10S	150	WNRF	PROCESS INLET	TBD	TBD	TANK ROOF	TBD	TBD
V1	TBD	10S	150	WNRF	VENT NOZZLE	TBD	TBD	TANK ROOF	TBD	TBD
A4	TBD	10S	150	WNRF	PROCESS INLET	TBD	TBD	TANK ROOF	TBD	TBD
M1	600	-	-	-	ROOF MANWAY NOZZLE	TBD	TBD	TANK ROOF	TBD	TBD
B1	TBD	10S	150	WNRF	PROCESS OUTLET	TBD	TBD	TBD	TANK SIDE WALL	TBD
D1	TBD	10S	150	WNRF	DRAIN NOZZLE	TBD	TBD	TBD	TANK SIDE WALL	TBD
G1	25	40S	150	WNRF	LEVEL GAUGE NOZZLE	TBD	TBD	TBD	TANK SIDE WALL	TBD
B2	50	40S	150	WNRF	LEVEL GAUGE NOZZLE	TBD	TBD	TBD	TANK SIDE WALL	TBD
S1	15	10S	150	WNRF	SAMPLE NOZZLE	TBD	TBD	TBD	TANK SIDE WALL	TBD
M2	600	-	-	-	SHELL MANWAY NOZZLE	TBD	TBD	TBD	TANK SIDE WALL	TBD

LIST OF VARIABLES

VARIABLE	MEASUREMENT	UNITS	NOTES
H	TBD	mm	HEIGHT OF TANK
D	TBD	mm	INTERNAL DIAMETER OF TANK
DH	TBD	mm	MAX PERMISSIBLE HEIGHT OF DOME
PH	TBD	mm	PLINTH HEIGHT
RAD1	TBD	mm	POSITION (RADIUS) OF NOZZLES FROM CENTRE OF ROOF
RAD2	TBD	mm	POSITION (RADIUS) OF NOZZLES FROM CENTRE OF ROOF

DRAWING NOTES

1. POSITION OF NOZZLES ARE FOR INDICATION PURPOSES ONLY. CONTRACTOR TO DETERMINE EXACT NOZZLE POSITIONS AND PROJECTIONS.
2. DEPENDANT ON PIPE SIZE. PIPE TO MATCH TANK FLANGE.
3. DROP TUBE SUPPORT TO STOP PIPES FROM SWAYING. MADE FROM GRP / STAINLESS STEEL AND MOUNTED TO SIDE OF TANK SHALL BE DRILLED TO ALLOW THE USE OF A U-BOLT.
4. DROP TUBES TO BE STAINLESS STEEL, SCHEDULE 10S, CLASS 150 PIPE. DROP TUBES TO MATCH NOZZLE SIZE.
5. STAINLESS STEEL 304 6mm PLATE SUPPORTS. TO BE DRILLED ON SITE TO SUIT U-BOLT FOR SUPPORTED PIPE.
6. G1 AND B2 TO SUPPORT LEVEL INDICATOR LOAD.
7. TANK DESIGN AND MATERIAL SPECIFICATION AS PER PL 911.
8. WHERE INCOMPATIBLE METALS ARE IN CONTACT, SUITABLE INSULATION MATERIALS SHALL BE USED, IE TEFLON PADS, TOP HAT WASHERS, ETC.
9. ONLY THE USE OF STAINLESS STEEL AND GRP PERMITTED.
10. CONTRACTOR TO DESIGN SUITABLE LIFTING LUGS.

PL SPECIFICATIONS

PL 911 FOAM CONCENTRATE TANK SPECIFICATION

DESIGNER			
RESP. ENG			
PROJ. MANAGER			
CLIENT			
ROLE	NAME	SIGN	DATE
DRAWING APPROVAL STATUS			

PROJECT: TRANSNET PIPELINES HW FIRE

TITLE: FOAM CONCENTRATE TANK TYPICAL DRAWING

SCALE	CHECKED:	APPROVED:
As indicated	BJ	BJ
CAD FILE: HO1436-TPL_2024_09_0008_77334_RFP-FAT-0001	DESIGN-DRAWN: HS - HS	DATE: 2025-08-08
PROJECT No: 11364	DRAWING No: 11364-A1078	REV: B

GREYJONES (PTY) LTD.

(031) 816 9386 admin@greyjones.co.za www.greyjones.co.za

REFERENCES

DWG NUMBER	DESCRIPTION
-	-
-	-
-	-
-	-
-	-
-	-
-	-
-	-
-	-
-	-

REVISIONS

REV	DATE	BY	CHK	DESCRIPTION
A	2025-08-08	HS	BJ	ISSUED FOR ACCEPTANCE
B	2025-09-10	HS	BJ	ISSUED AFTER PJ COMMENTS

TRANSNET pipelines

PROJECT NAME: HW FIRE

DRAWN		REF	
TRACED		DATE	
CHECKED		APPROVED	
SCALE			

TPL DRAWING No. HO1436-TYP-FP-DE-0004 REV

A1

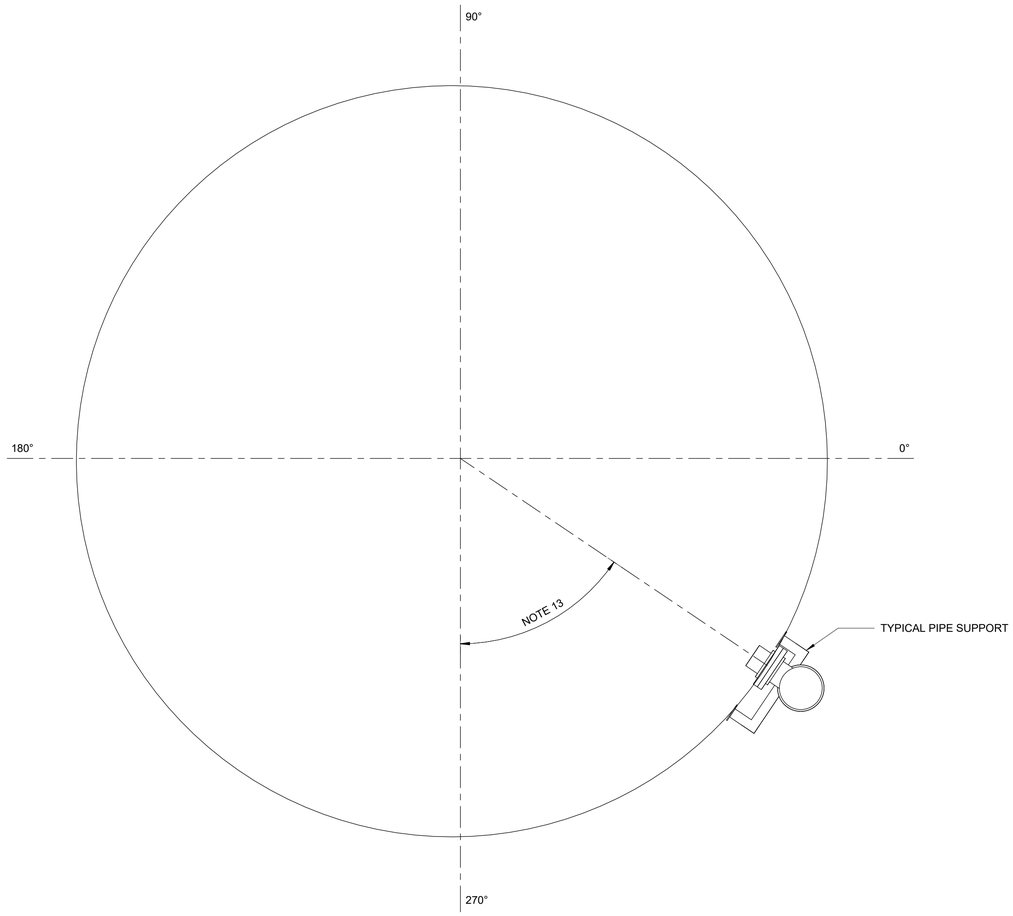

TOP VIEW SHOWING RADIAL POSITION OF TOP POURER

SCALE: N.T.S

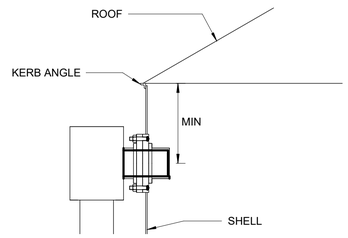

DETAIL B - TOP POURER FLANGE TO TOP OF SHELL CONNECTION

SCALE: N.T.S

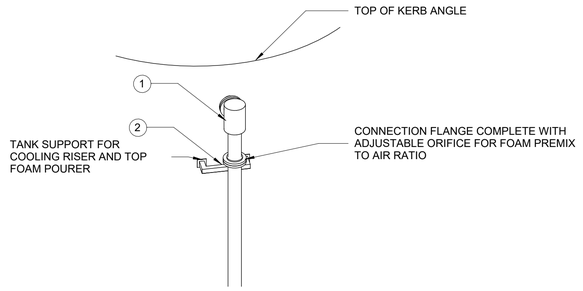

VIEW SHOWING RISER AND TOP POURER INTERFACE TO TANK

SCALE: N.T.S

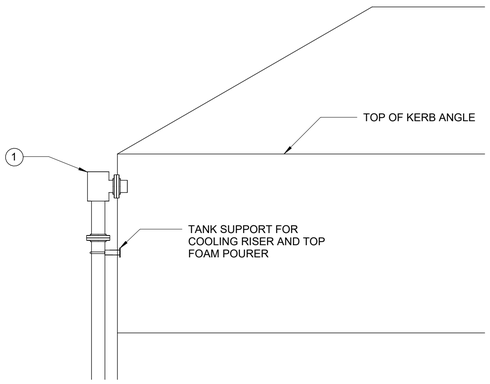

SIDE VIEW ON TOP POURER

SCALE: N.T.S

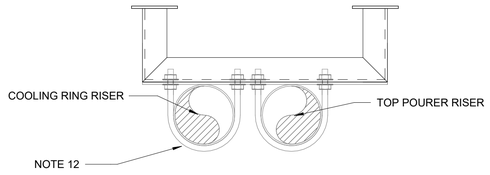

RISER POSITION SCHEMATIC

SCALE: N.T.S

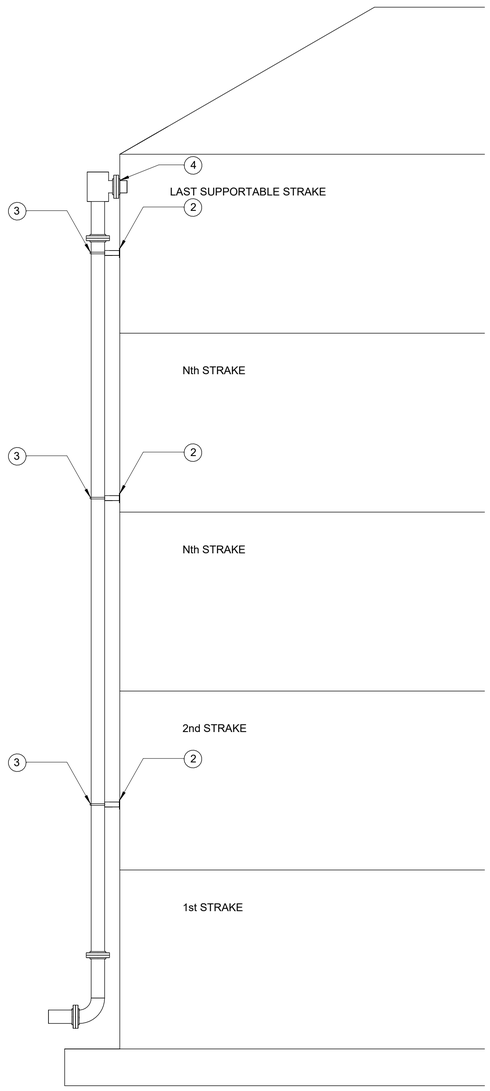

DETAIL A - RISER SUPPORT POSITION DETAIL

SCALE: N.T.S

BILL OF MATERIAL

ITEM	SIZE	DESCRIPTION	QTY
1	-	TANK TOP FOAM POURER IN ACCORDANCE WITH PL 904	1
2	-	PIPE SUPPORT	NOTE 9
3	-	U-BOLT COMPLETE WITH NUTS AND WASHERS	TO MATCH SUPPORT QUANTITY
4	-	SET OF STAINLESS STUD BOLTS, NUTS AND WASHERS FOR TOP POURER CONNECTION	1

PROCESS DATA

PROCESS FLUID	FOAM PRE-MIX
PIPE SPEC	AS PER CONTRACT SPECIFICATION
DESIGN PRESSURE	NOTE 13 – REFER PL 912
TEST PRESSURE	NOTE 13 – REFER PL 912
DESIGN TEMP	NOTE 13 – REFER PL 912
FLUID GROUP	NOTE 13
SANS 347 CATEGORY	NOTE 13

DRAWING NOTES

1. HEMP & STAG TO BE USED ON ALL THREADED PIPE FITTINGS.
2. ALL DIMENSIONS SHOWN ARE IN MILLIMETRES.
3. ALL FLANGE BOLT HOLES SHALL STRADDLE PRINCIPLE CENTRELINES, UNLESS OTHERWISE STATED.
4. PIPING FABRICATOR TO MARK OUT ALL PIPING AND VERIFY DIMENSIONS ON SITE PRIOR TO FABRICATION.
5. WHERE PIPING REQUIRES FIELD WELDING, PIPING FABRICATOR SHALL MAKE ALLOWANCE FOR MEASUREMENT DISCREPANCIES.
6. ALL PAINTING AND COATING TO COMPLY WITH PL 912.
7. ALL SUPPORT MATERIAL TO BE PAINTED. ALL PAINTING AND/OR COATING TO COMPLY WITH PL 838-2. TANK CORROSION PROTECTION SYSTEM TO BE USED ON SUPPORT MATERIALS. COMPLETE CORROSION PROTECTION SYSTEM TO BE APPLIED PRIOR INSTALLATION OF PTFE PAD AND PIPE.
8. CONTRACTOR TO PERFORM MOCK FIT-UP OF TOP POURER AND RISER PRIOR TO ANY MODIFICATIONS TO THE TANK AND INVITE THE EMPLOYER TO INSPECT.
9. DETAIL A ILLUSTRATES HOW THE RISER SUPPORTS SHALL BE POSITIONED ON SITE. THE FIRST TANK STRAKE SHALL BE MISSED. EVERY SECOND STRAKE SHALL HAVE A SUPPORT. THE LAST STRAKE THAT CAN BE USED TO SUPPORT THE RISER SHALL ALSO HAVE A SUPPORT. CONTRACTOR TO DETERMINE POSITION AND QUANTITY OF RISER SUPPORTS ON SITE.
10. THE CONTRACTOR SHALL DESIGN AND SUBMIT TO THE EMPLOYER FOR ACCEPTANCE, THE TOP FOAM POURER TO TANK NOZZLE CONNECTION
11. ANY NEW WELD TO AN EXISTING TANK SHALL BE AT LEAST 150 mm AWAY FROM EXISTING WELDS.
12. CONTRACTOR TO SWAP COOLING RING RISER AND TOP POURER RISER TO SUIT.
13. CONTRACTOR TO DETERMINE DURING DETAILED DESIGN.

PL SPECIFICATIONS

PL 838-2	CORROSION PROTECTION COATING FOR EXTERIOR SURFACES OF STEEL TANKS SPECIFICATION
PL 904	FOAM GENERATING EQUIPMENT SPECIFICATION
PL 912	PIPING SUPPLY AND INSTALLATION SPECIFICATION

DESIGNER			
RESP. ENG			
PROJ. MANAGER			
CLIENT			
ROLE	NAME	SIGN	DATE
DRAWING APPROVAL STATUS			

A1

PROJECT: TRANSNET PIPELINES HW FIRE

TITLE: TOP FOAM POURER TANK CONNECTION DETAIL TYPICAL DRAWING

SCALE	CHECKED:	APPROVED:
As indicated	BJ	BJ
CAD FILE: HO1436-TPL_2024_09_0008_77334_RFP-FAT-0001	DESIGN-DRAWN: HS - HS	DATE: 2025-08-08
PROJECT No: 11364	DRAWING No: 11364-A1079	REV: B

GREYJONES (PTY) LTD.

(031) 816 9386 admin@greyjones.co.za www.greyjones.co.za

REFERENCES

DWG NUMBER	DESCRIPTION
-	-
-	-
-	-
-	-
-	-
-	-
-	-
-	-
-	-
-	-

REVISIONS

REV	DATE	BY	CHK	DESCRIPTION
A	2025-08-08	HS	BJ	ISSUED FOR ACCEPTANCE
B	2025-09-10	HJ	BJ	ISSUED AFTER PJ COMMENTS

TRANSNET pipelines

PROJECT NAME: HW FIRE

DRAWN		REF.	
TRACED		DATE	
CHECKED		APPROVED	
SCALE			

TPL DRAWING No. HO1436-TYP-FP-DE-0006 REV

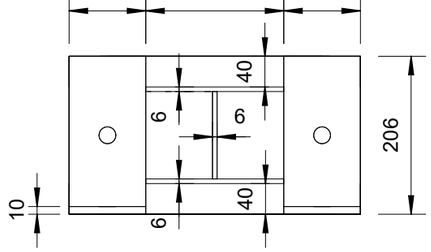

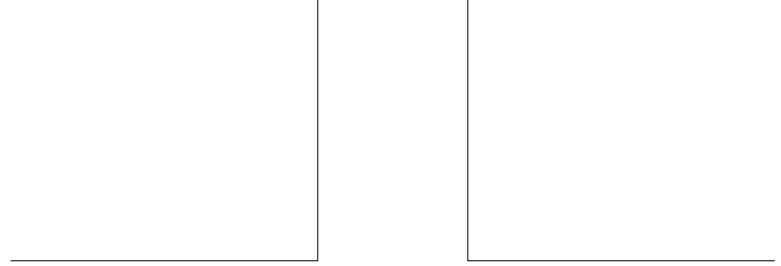

TION

BUND POURER MEX 1200 TYPICAL INSTALLATION

SCALE: N.T.S

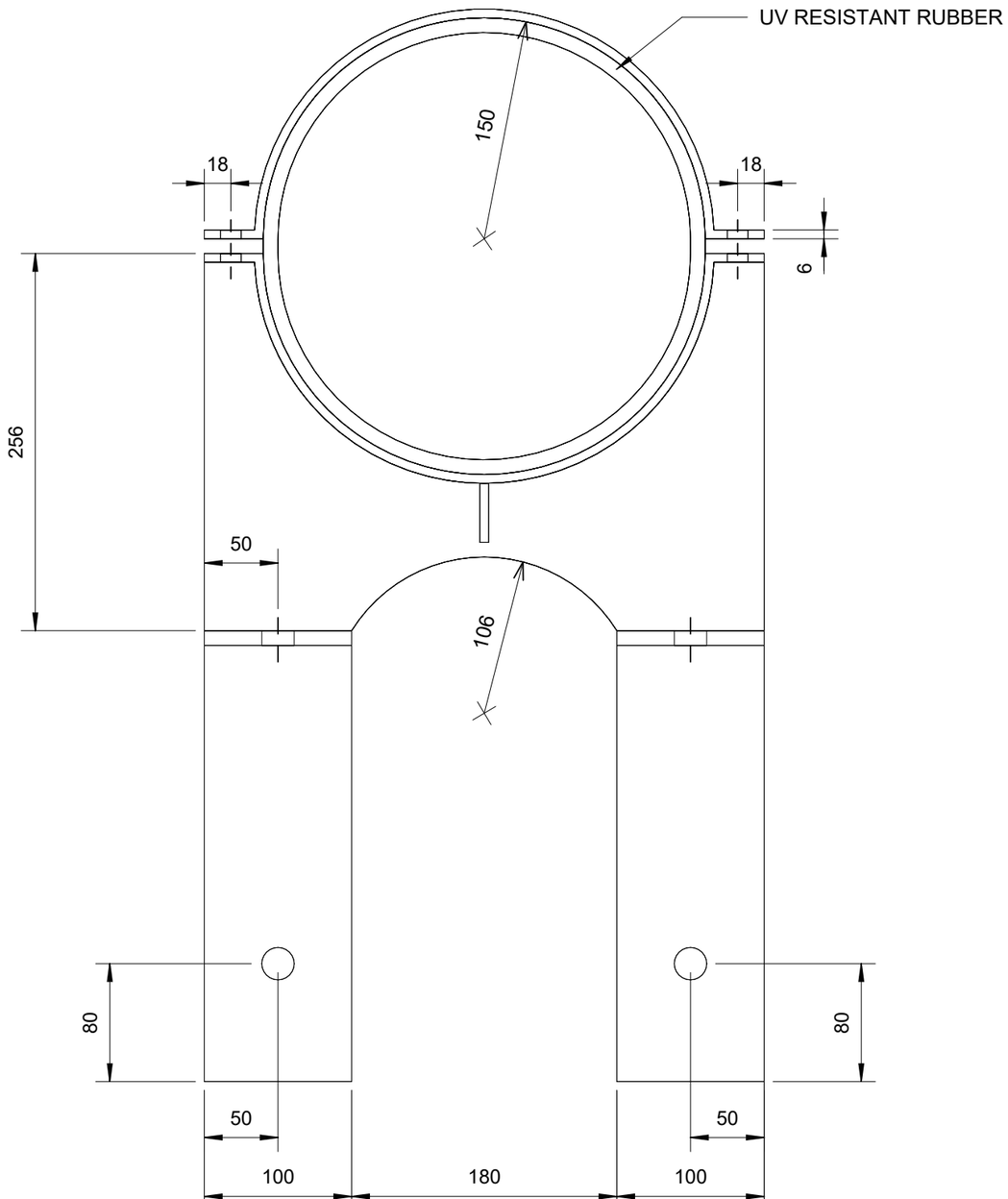

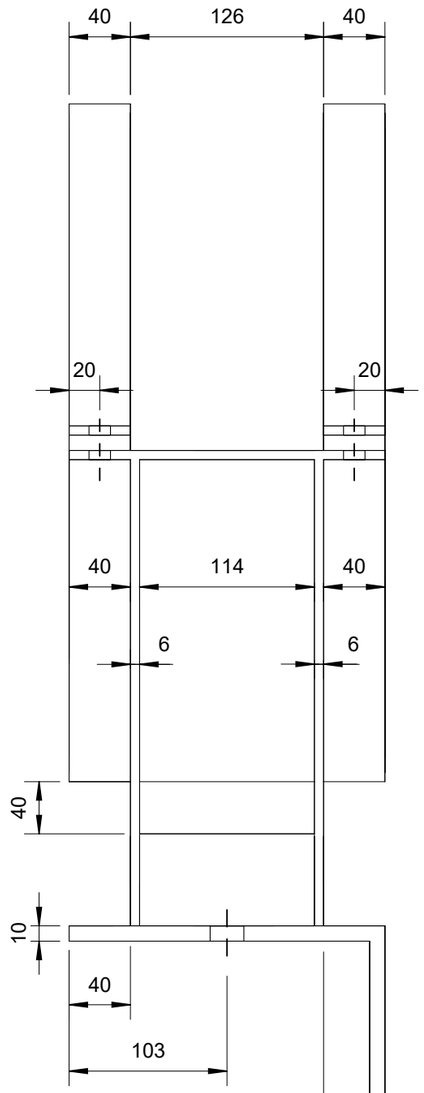

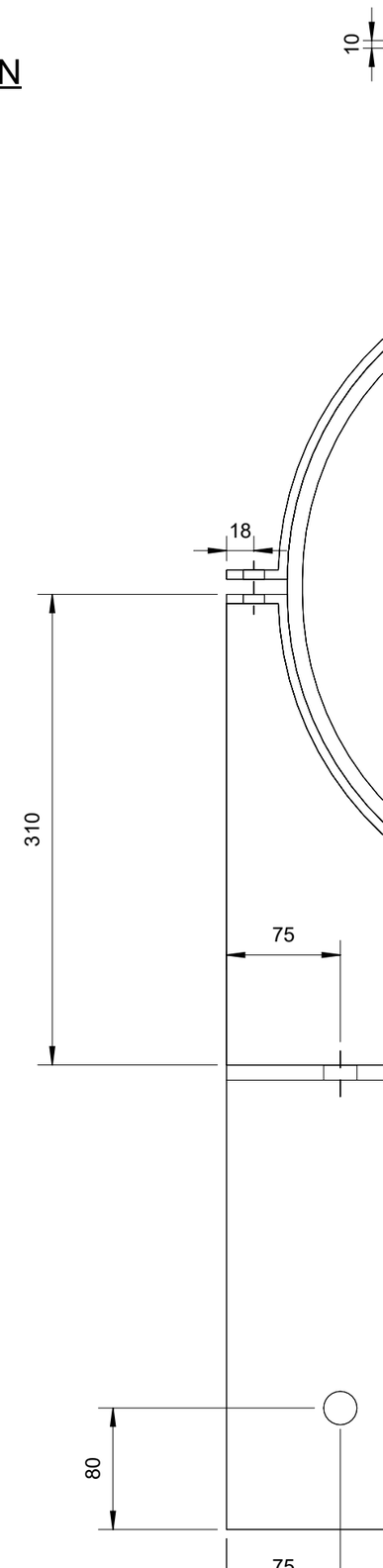

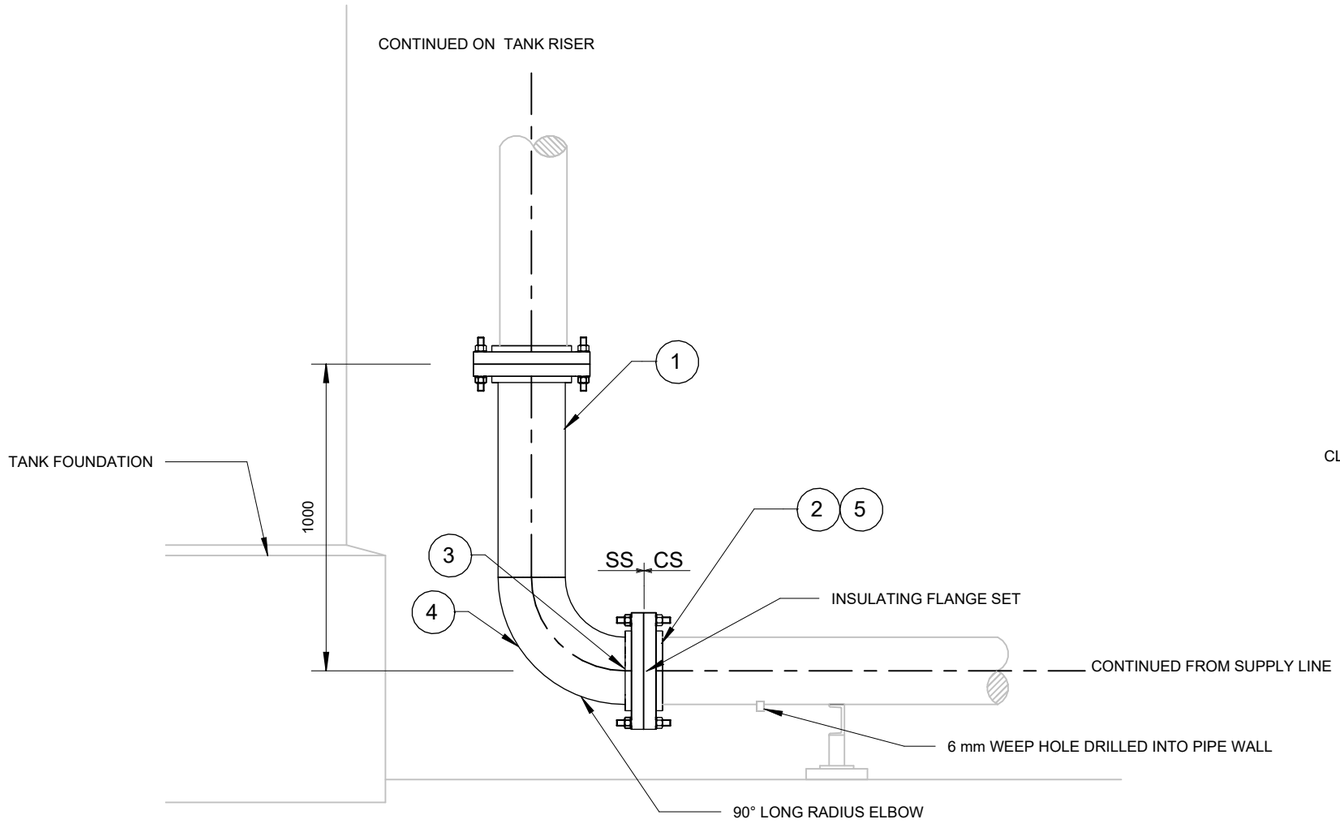

INSULATING FLANGE AND WEEP HOLE ON TANK RISER

SCALE: N.T.S

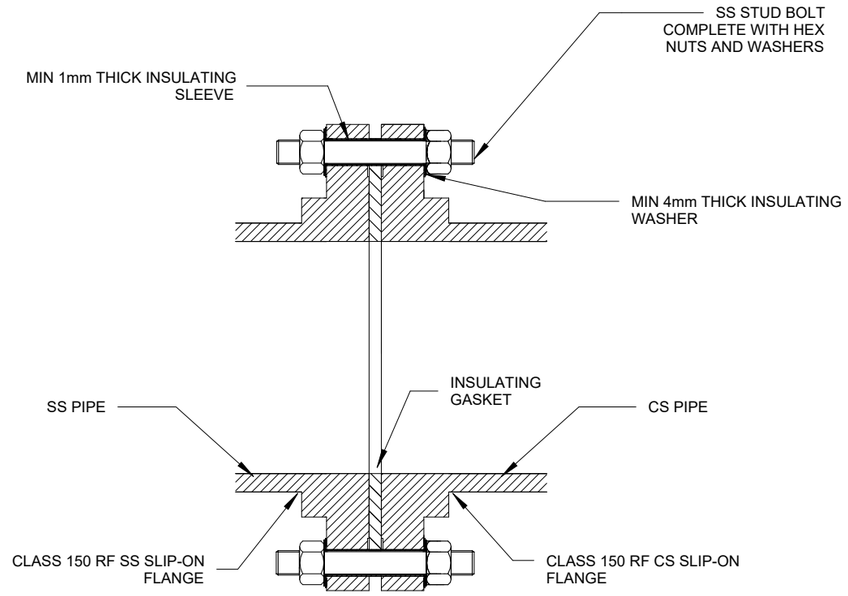

SECTION DETAIL OF INSULATING FLANGE

SCALE: N.T.S

DRAWING NOTES

1. CARBON STEEL U-BOLTS SHALL BE USED TO SECURE CARBON STEEL PIPES. STAINLESS STEEL U-BOLTS SHALL BE USED TO SECURE STAINLESS STEEL PIPES. SEE DRAWING FOR STANDARD U-BOLT INSTALLATION.
2. ALL FASTENERS TO BE AS PER PL 912.
3. MINIMUM OF 3 THREAD LENGTHS SHALL PROTRUDE THROUGH NUTS AT ALL TIMES.
4. INSULATING GASKET MATERIAL OF PREMIUM GRADE FIBRE GLASS REINFORCED PHENOLIC RESIN IS SUITABLE FOR LOW PRESSURE, LOW TEMPERATURE FIRE FIGHTING CONDITIONS.
5. FIBRE GLASS REINFORCED PHENOLIC RESIN INSULATING WASHERS SHALL SEPARATE STEEL WASHERS FROM FLANGES.
6. SIZE TO MATCH SUPPLY LINE SIZE.

PL SPECIFICATIONS

PL 415	STEEL FLANGE INSULATING KIT SPECIFICATION
PL 912	PIPING SUPPLY AND INSTALLATION SPECIFICATION

BILL OF MATERIALS

ITEM	SIZE	MATERIAL	DESCRIPTION
1	NOTE 6	IN ACCORDANCE WITH PL 912	STAINLESS STEEL PIPE
2	NOTE 6	IN ACCORDANCE WITH PL 912	CARBON STEEL FLANGE
3	NOTE 6	IN ACCORDANCE WITH PL 912	STAINLESS STEEL FLANGE
4	NOTE 6	IN ACCORDANCE WITH PL 912	90° LR ELBOW TO MATCH PIPE SIZE
5	NOTE 6	IN ACCORDANCE WITH PL 415	FLANGE INSULATION KIT

ROLE	NAME	SIGN	DATE
DESIGNER			
RESP. ENG			
PROJ. MANAGER			
CLIENT			

DRAWING APPROVAL STATUS

PROJECT:
TRANSNET PIPELINES
HW FIRE

A3

TITLE:
TANK COOLING AND TOP FOAM POURER RISER TYPICAL DRAWING

SCALE	CHECKED:	APPROVED:
As indicated	BJ	BJ
CAD FILE: HO1436-TPL_2024_09_0008_77334_RFP-FAT-0001	DESIGN-DRAWN: HS - HS	DATE: 2025-07-14
PROJECT No: 11364	DRAWING No: 11364-A1081	REV: B

GREYJONES (PTY) LTD.
GREYJONES (PTY) LTD.
admin@greyjones.co.za www.greyjones.co.za
(031) 816 9386

REVISIONS

REV	DATE	BY	CHK	DESCRIPTION
A	2025-07-18	HS	BJ	ISSUED FOR ACCEPTANCE
B	2025-09-10	HS	BJ	ISSUED AFTER PJ COMMENTS

TRANSNET pipelines

PROJECT NAME
HW FIRE

DRAWN		REF.	
TRACED		DATE	
CHECKED		APPROVED	
SCALE			
TPL DRAWING No. HO1436-TYP-FP-DE-0008			REV

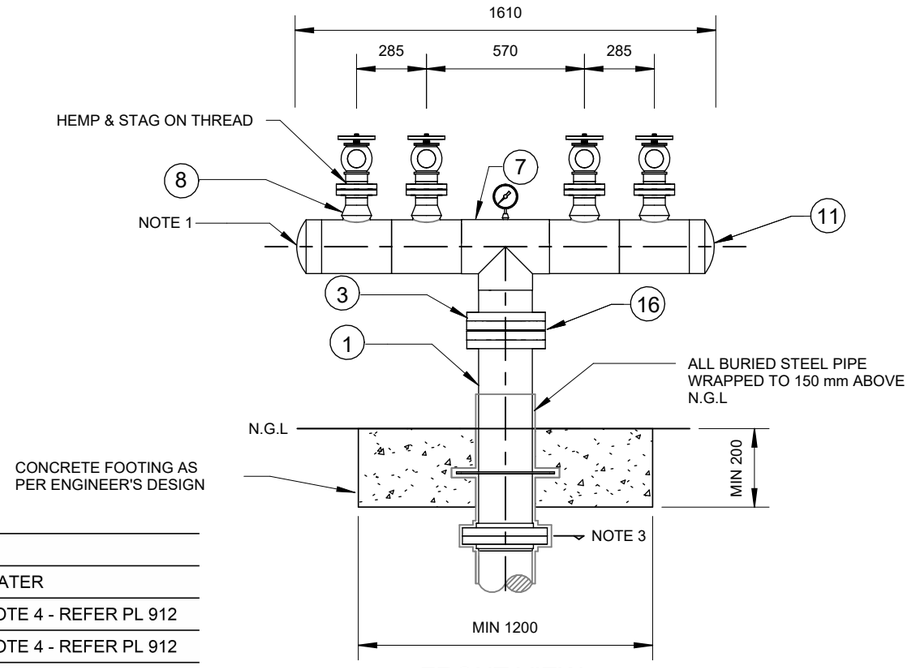

FRONT VIEW

SCALE: N.T.S

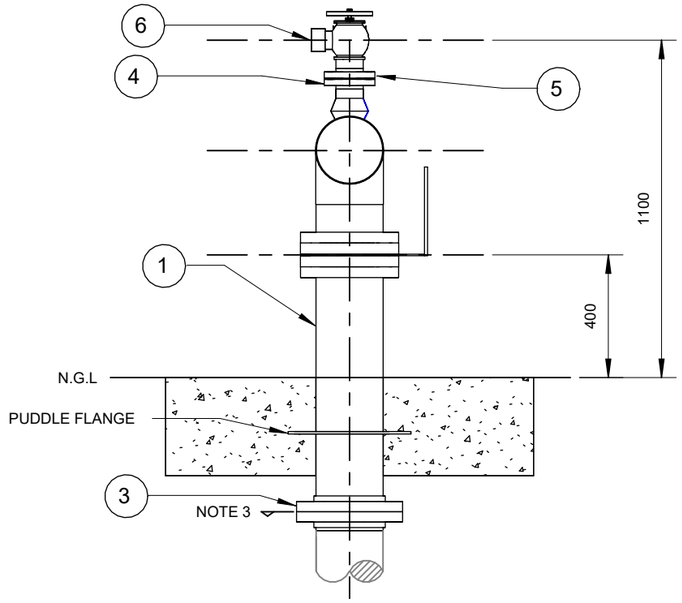

SIDE VIEW

SCALE: N.T.S

DRAWING NOTES

1. DRILL AND TAP END CAP TO SUIT 150NB PLUG. SUPPLY AND INSTALL PLUG USING HEMP AND STAG.
2. CONTRACTOR TO DESIGN PUDDLE FLANGE DETAIL AND SUBMIT FOR ACCEPTANCE. PUDDLE FLANGE TO BE CENTERED IN CONCRETE FOOTING.
3. REFER TO ISOMETRIC FOR CONTINUATION DETAILS.
4. CONTRACTOR TO DETERMINE DURING DETAILED DESIGN.

PL SPECIFICATIONS

PL 898 BUTTERFLY VALVE SPECIFICATION

PL 909 PRESSURE GAUGE SPECIFICATION

PL 910 FIRE DEPARTMENT INTERFACE EQUIPMENT SPECIFICATION

PL 912 PIPING SUPPLY AND INSTALLATION SPECIFICATION

PROCESS DATA	
PROCESS FLUID	WATER
DESIGN PRESSURE	NOTE 4 - REFER PL 912
TEST PRESSURE	NOTE 4 - REFER PL 912
DESIGN TEMP	NOTE 4 - REFER PL 912
FLUID GROUP	NOTE 4
SANS 347 CAT	NOTE 4
CORROSION PROTECTION SYSTEM	REFER PL 912

BILL OF MATERIALS

ITEM	MATERIAL	DESCRIPTION
1	IN ACCORDANCE WITH PL 912	150NB CARBON STEEL PIPE
2	IN ACCORDANCE WITH PL 912	80NB CARBON STEEL PIPE
3	IN ACCORDANCE WITH PL 912	150NB SLIP-ON RAISED FACE FLANGE
4	IN ACCORDANCE WITH PL 912	80NB SLIP-ON RAISED FACE FLANGE
5	IN ACCORDANCE WITH PL 912	80NB THREADED RAISED FACE FLANGE
6	IN ACCORDANCE WITH PL 910	HYDRANT VALVE
7	IN ACCORDANCE WITH PL 912	150NB EQUAL TEE
8	IN ACCORDANCE WITH PL 912	150x80 WELDOLET
9	IN ACCORDANCE WITH PL 912	150NB GASKET 3mm THICK
10	IN ACCORDANCE WITH PL 912	80NB GASKET 3mm THICK
11	IN ACCORDANCE WITH PL 912	150NB END CAP
12	IN ACCORDANCE WITH PL 912	COMPLETE NUTS, BOLTS AND WASHERS SETS TO SUIT 80NB FLANGE
13	IN ACCORDANCE WITH PL 912	COMPLETE NUTS, BOLTS AND WASHERS SETS TO SUIT 200NB FLANGE
14	IN ACCORDANCE WITH PL 909	PRESSURE GAUGE
15	IN ACCORDANCE WITH PL 912	150x15 THREDOLET
16	IN ACCORDANCE WITH PL 898	150NB BUTTERFLY VALVE

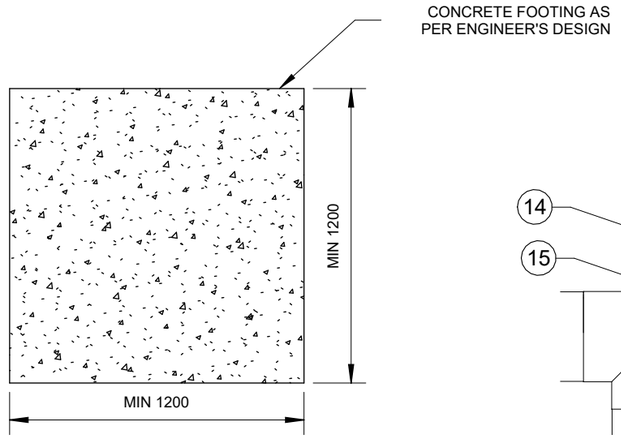

PLAN ON CONCRETE FOOTING

SCALE: N.T.S

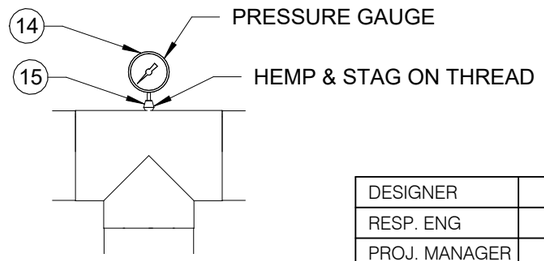

PRESSURE GAUGE DETAIL

SCALE: N.T.S

DESIGNER			
RESP. ENG			
PROJ. MANAGER			
CLIENT			
ROLE	NAME	SIGN	DATE

DRAWING APPROVAL STATUS

PROJECT: TRANSNET PIPELINES HW FIRE

A3 TITLE: FIRE HYDRANT TYPICAL DRAWING

SCALE: As indicated

CAD FILE: HO1436-TPL_2024_09_0008_77334_RFP-FAT-0001

PROJECT No: 11364

CHECKED: BJ

DESIGN-DRAWN: HS - HS

DRAWING No: 11364-A1082

APPROVED: BJ

DATE: 2025-07-14

REV: B

GREYJONES (PTY) LTD.

admin@greyjones.co.za www.greyjones.co.za

(031) 816 9386

REVISIONS

REV	DATE	BY	CHK	DESCRIPTION
A	2025-07-18	HS	BJ	ISSUED FOR ACCEPTANCE
B	2025-09-10	HS	BJ	ISSUED AFTER PJ COMMENTS

TRANSNET pipelines

PROJECT NAME: HW FIRE

DRAWN		REF.	
TRACED		DATE	
CHECKED		APPROVED	
SCALE			
TPL DRAWING No. HO1436-TYP-FP-DE-0009			REV

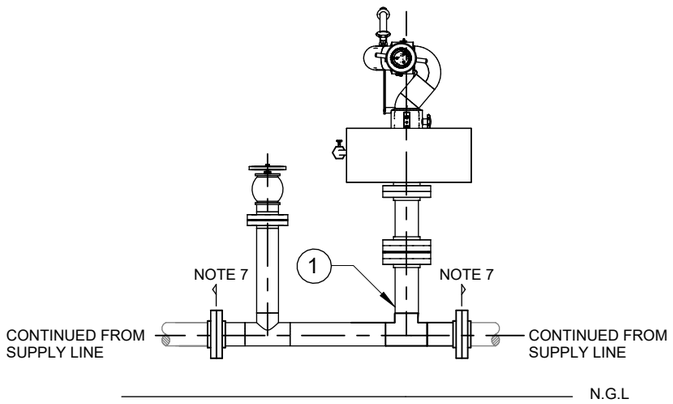

FRONT VIEW (OPTION 1)

ABOVE GROUND SUPPLY OPTION TEE CONNECTION

SCALE: N.T.S

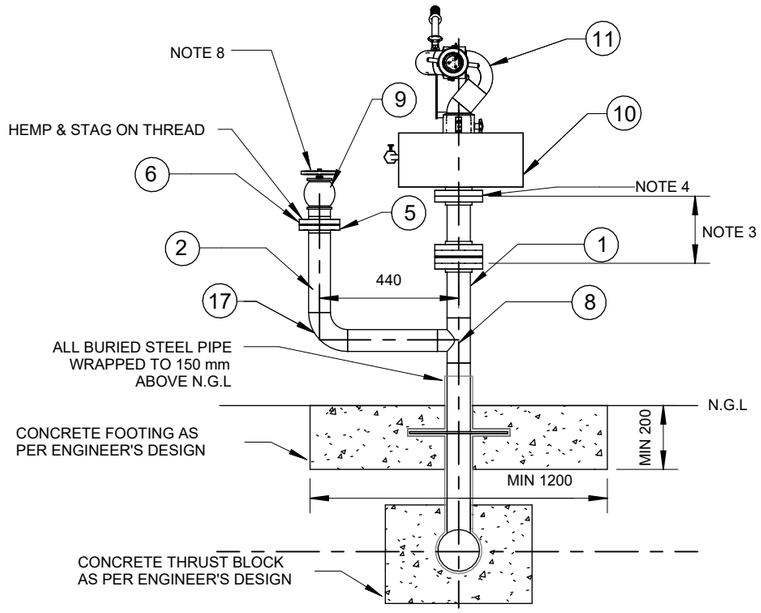

FRONT VIEW (OPTION 2)

BELOW GROUND SUPPLY OPTION

SCALE: N.T.S

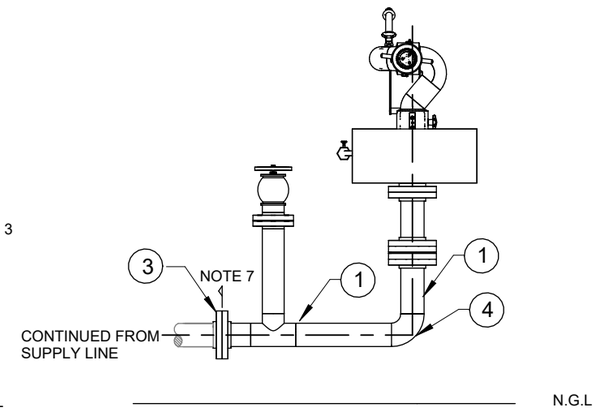

FRONT VIEW (OPTION 3)

ABOVE GROUND SUPPLY OPTION END OF LINE

SCALE: N.T.S

BILL OF MATERIALS

ITEM	MATERIAL	DESCRIPTION
1	IN ACCORDANCE WITH PL 912	100NB CARBON STEEL PIPE
2	IN ACCORDANCE WITH PL 912	80NB CARBON STEEL PIPE
3	IN ACCORDANCE WITH PL 912	100NB SLIP-ON RAISED FACE FLANGE
4	IN ACCORDANCE WITH PL 912	100NB ELBOW
5	IN ACCORDANCE WITH PL 912	80NB SLIP-ON RAISED FACE FLANGE
6	IN ACCORDANCE WITH PL 912	80NB THREADED RAISED FACE FLANGE
7	IN ACCORDANCE WITH PL 898	100NB BUTTERFLY VALVE
8	IN ACCORDANCE WITH PL 912	100x80 REDUCING TEE
9	IN ACCORDANCE WITH PL 910	HYDRANT VALVE
10	IN ACCORDANCE WITH PL 904	OSCILLATING FLANGE
11	IN ACCORDANCE WITH PL 904	FOAM MONITOR
12	IN ACCORDANCE WITH PL 904	FOAM MONITOR NOZZLE
13	IN ACCORDANCE WITH PL 912	100NB GASKET 3mm THICK
14	IN ACCORDANCE WITH PL 912	80NB GASKET 3mm THICK
15	IN ACCORDANCE WITH PL 912	COMPLETE BOLTS, NUTS AND WASHERS SET TO SUIT 100NB FLANGE
16	IN ACCORDANCE WITH PL 912	COMPLETE BOLTS, NUTS AND WASHERS SET TO SUIT 80NB FLANGE
17	IN ACCORDANCE WITH PL 912	80NB ELBOW

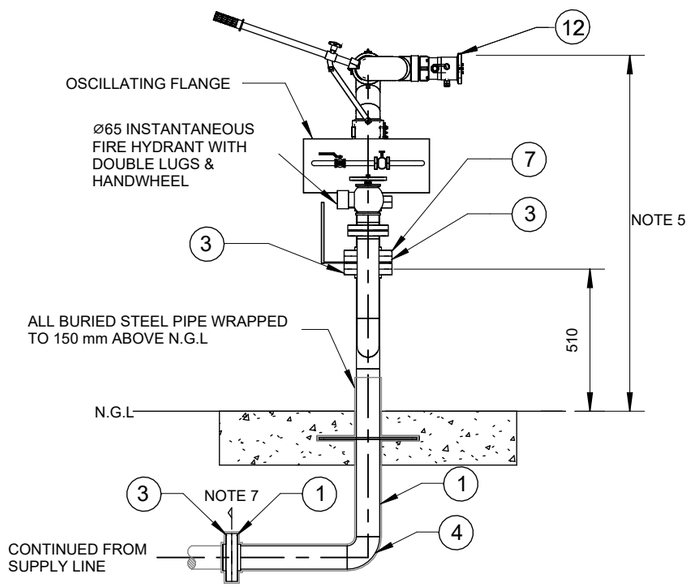

SIDE VIEW

SCALE: N.T.S

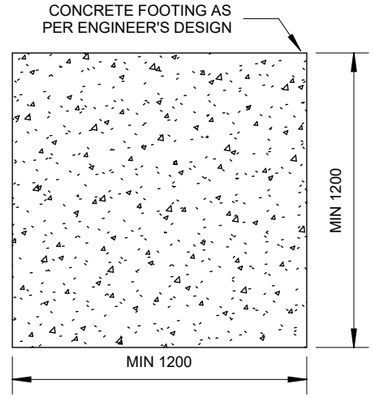

PLAN ON CONCRETE FOOTING

SCALE: N.T.S

DRAWING NOTES

1. DIRECTION OF MONITOR NOZZLE AND HYDRANT VALVE MAY VARY FROM THE INDICATED TO SUIT REQUIREMENTS. THE EMPLOYER SHALL BE INVITED TO INSPECT ORIENTANTIONS.
2. DIMENSIONS MAY VARY DEPENDING ON SPECIFICATION OF MONITOR AND OSCILLATING FLANGE USED.
3. CONNECTION SHALL BE ADJUSTED TO FACILITATE REQUIRED HEIGHTS.
4. CONTRACTOR TO SUPPLY CARBON STEEL FLANGE (AND REDUCER IF REQUIRED) TO MATCH FLANGE SPECIFICATION OF MONITOR.
5. PROVIDE 1500mm CLEARANCE TO HANDLE CONNECTION.
6. ALL DIMENSIONS ARE IN MILLIMETRES.
7. REFER TO ISOMETRIC FOR CONTINUATION DETAILS.
8. SOME MONITORS SHALL NOT BE SUPPLIED FROM BELOW GROUND. PREFERRED SUPPLY TO BE ABOVE GROUND.
9. HYDRANTS TO BE POSITIONED ON THE SAME SIDE.

PL SPECIFICATIONS

PL 898	BUTTERFLY VALVE SPECIFICATION
PL 904	FOAM GENERATING EQUIPMENT SPECIFICATION
PL 910	FIRE DEPARTMENT INTERFACE EQUIPMENT SPECIFICATION
PL 912	PIPING SUPPLY AND INSTALLATION SPECIFICATION

DESIGNER			
RESP. ENG			
PROJ. MANAGER			
CLIENT			
ROLE	NAME	SIGN	DATE

DRAWING APPROVAL STATUS

PROJECT:
TRANSNET PIPELINES
HW FIRE

A3

TITLE:
FOAM MONITOR TYPICAL DRAWING

SCALE	CHECKED:	APPROVED:
As indicated	BJ	BJ
CAD FILE: HO1436-TPL_2024_09_0008_77334_RFP-FAT-0001	DESIGN-DRAWN: HS - HS	DATE: 2025-07-14
PROJECT No: 11364	DRAWING No: 11364-A1083	REV: B

GREYJONES (PTY) LTD.

admin@greyjones.co.za www.greyjones.co.za

(031) 816 9386

REVISIONS

REV	DATE	BY	CHK	DESCRIPTION
A	2025-07-18	HS	BJ	ISSUED FOR ACCEPTANCE
B	2025-09-10	HS	BJ	ISSUE AFTER PJ COMMENTS

TRANSNET pipelines

PROJECT NAME
HW FIRE

DRAWN		REF.	
TRACED		DATE	
CHECKED		APPROVED	
SCALE			
TPL DRAWING No. HO1436-TYP-FP-DE-0010			REV

U-BOLT DIMENSIONS

PIPE SIZE	ØD	ØE	F(ANCHOR)	F(GUIDE)
15NB	21.3	M6	30	34
20NB	26.7	M6	34	38
25NB	33.4	M6	41	45
40NB	48.3	M10	60	64
50NB	60.3	M10	72	76
65NB	73	M12	90	94
80NB	88.9	M12	102	106
100NB	114.3	M12	128	132
150NB	168.3	M16	187	191
200NB	219.1	M16	238	242
250NB	273	M20	297	301
300NB	323.9	M24	351	355

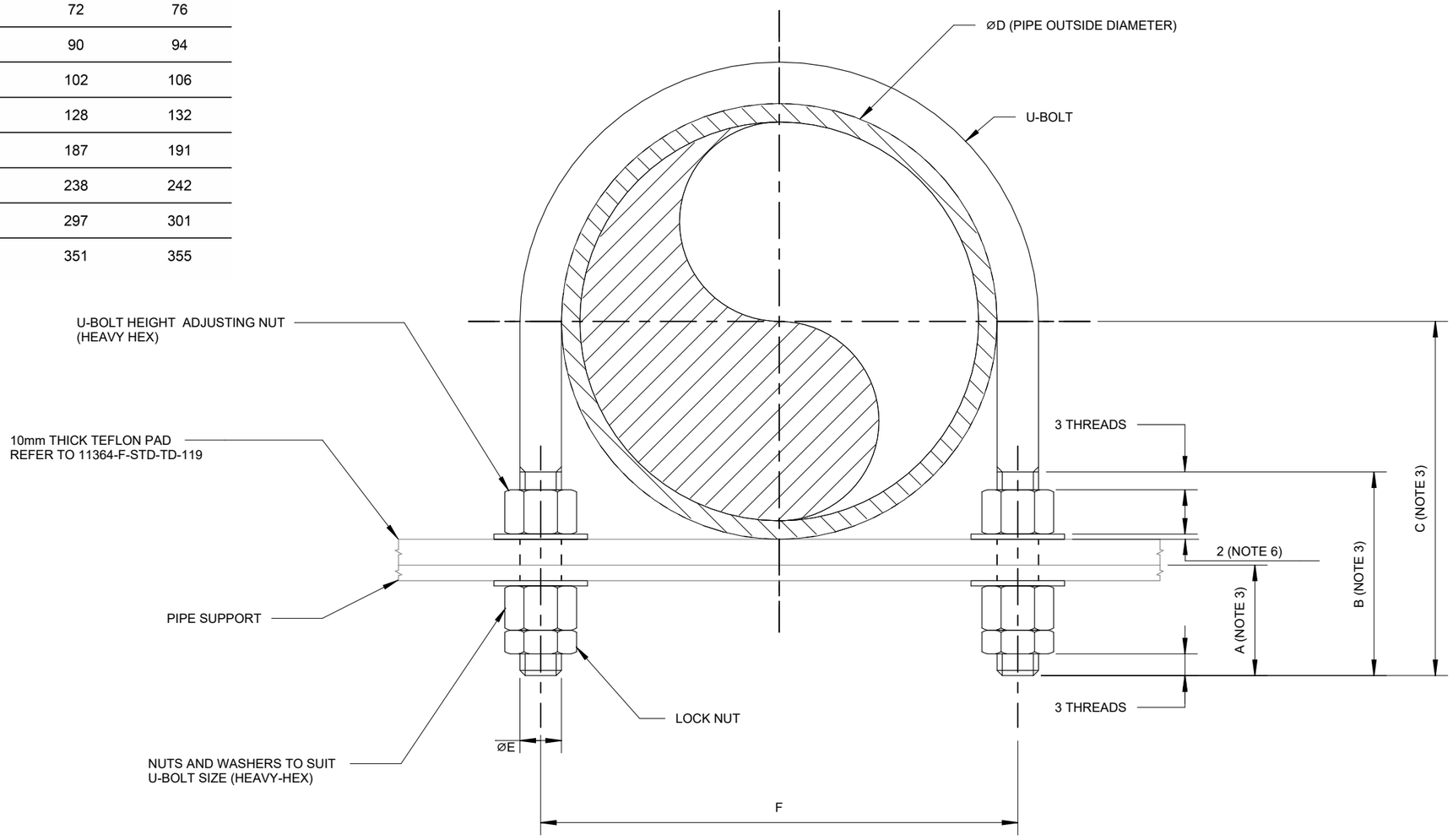

DRAWING NOTES

1. FOR CARBON STEEL AND GALVANISED PIPELINES, HOT-DIPPED GALVANISED CARBON STELL U-BOLTS, NUTS AND SHALL BE USED.
2. FOR STAINLESS STEEL PIPELINES, 316 STAINLESS U-BOLTS, NUTS AND WASHERS SHALL BE USED.
3. DIMESIONS A, B AND C TO BE DETERMINED BY THE CONTRACTOR. THE DIMENSIONS SHALL ALLOW ENOUGH THREAD FOR A 2mm GAP BETWEEN PIPE O.D. AND INTERNAL RADIUS OF U-BOLT.
4. U-BOLTS USED AS GUIDES TO HAVE 2mm GAP BETWEEN PIPE O.D. AND INTERNAL RADIUS OF U-BOLT. U-BOLTS USED AS ANCHORS TO BE FLUSH WITH PIPE O.D.
5. A MINIMUM OF THREE (3) THREAD LENGTHS AND A MAXIMUM OF FIVE (5) THREAD LENGHTS SHALL PROJECT THROUGH NUTS AT ALL TIMES.
6. DIMENSION FOR WASHERS SHOWN ARE MINIMUM.
7. DIMENSIONS SHOWN ARE IN MILLIMETRES.
8. ALL U-BOLTS SHALL COMPLY WITH SANS 1700.
9. PTFE PAD TO BE SECURED TO TOP OF SUPPORT ON BOTH SIDES OF U-BOLT, AND IN ACCORDANCE WITH PROJECT SPECIFICATION, WITH COUNTERSUNK BOLTS WITH NUTS AND WASHERS TO SUIT.

PL SPECIFICATIONS

PL 912 PIPING SUPPLY AND INSTALLATION SPECIFICATION

TYPICAL U-BOLT DETAIL

SCALE: N.T.S

ROLE	NAME	SIGN	DATE
DESIGNER			
RESP. ENG			
PROJ. MANAGER			
CLIENT			

DRAWING APPROVAL STATUS

PROJECT: TRANSET PIPELINE HW FIRE

A3 TITLE: U-BOLT DETAIL TYPICAL DRAWING

SCALE: As indicated

CAD FILE: HO1436-TPL_2024_09_0008_77334_RFP-FAT-0001

PROJECT No: 11364

CHECKED: BJ

DESIGN-DRAWN: HS - HS

DRAWING No: 11364-1085

APPROVED: BJ

DATE: 2025-08-18

REV: B

GREYJONES (PTY) LTD.
admin@greyjones.co.za www.greyjones.co.za
(031) 816 9386

REVISIONS

REV	DATE	BY	CHK	DESCRIPTION
A	2025-08-22	HS	BJ	ISSUED FOR ACCEPTANCE
B	2025-09-10	HS	BJ	ISSUED AFTER PJ COMMENTS

TRANSNET pipelines

PROJECT NAME: HW FIRE

DRAWN		REF.	
TRACED		DATE	
CHECKED		APPROVED	
SCALE			
TPL DRAWING No. HO1436-TYP-FP-DE-0018			REV

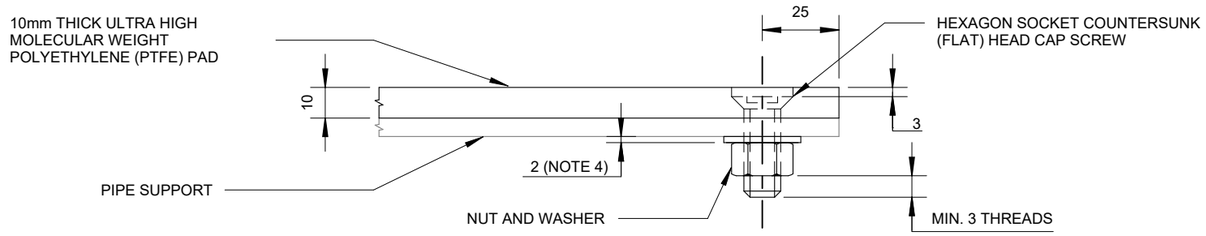

TYPICAL SECTION ON PTFE PAD AND COUNTERSUNK BOLT

SCALE: N.T.S

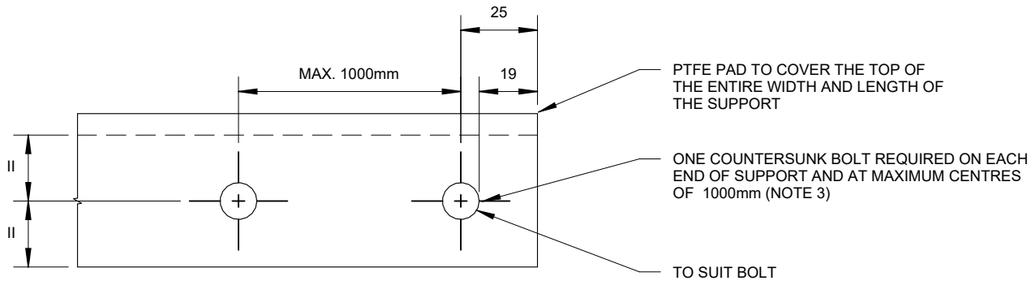

TYPICAL PLAN ON ONE END OF ANGLES AND CHANNELS

SCALE: N.T.S

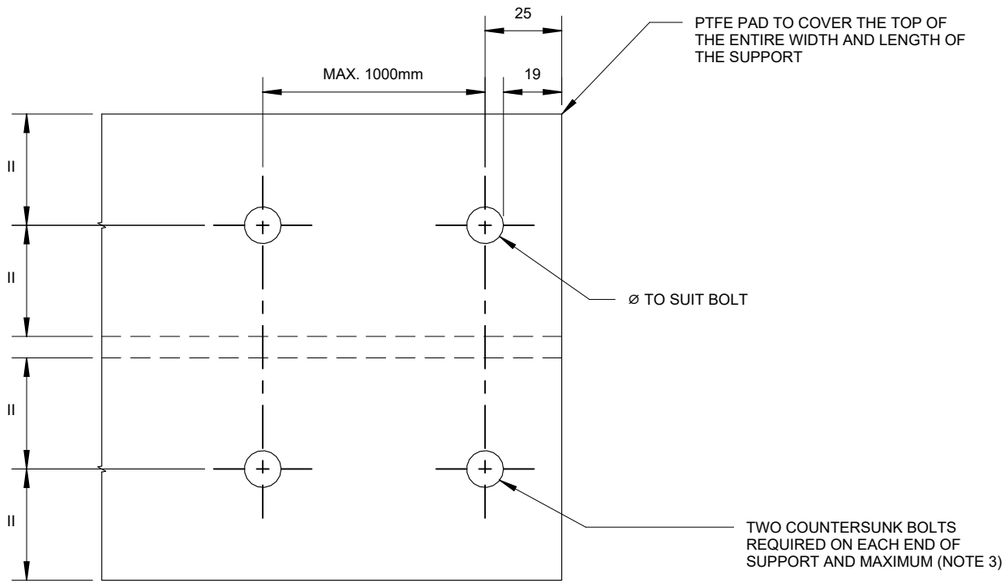

TYPICAL PLAN ON ONE END OF H SECTIONS AND I SECTIONS

SCALE: N.T.S

DRAWING NOTES

1. ALL BOLTS USED FOR FIXING PTFE PAD TO SUPPORT SHALL CONFORM TO SANS 1700.
2. ALL BOLTS, NUTS AND WASHERS SHALL BE GRADE 316 STAINLESS STELL.
3. THE CONTRACTOR SHALL DETERMINE SUITABLE LOCATIONS FOR INTERMEDIATE BOLTS BETWEEN THE END OF SUPPORTS, TO AVOID CLASHES WITH U-BOLT HOLE POSITIONS. CENTRE DISTANCE BETWEEN BOLTS SHALL NOT EXCEED 1000mm.
4. DIMENSION FOR WASHERS SHOWN ARE MINIMUM.
5. DIMENSION SHOWN ARE IN MILLIMETRES.
6. ONLY HEX HEAD COUNTERSUNK BOLTS WILL BE ACCEPTABLE. THE FINAL POSITION OF COUNTERSUNK BOLT HEAD TO BE BELOW TOP OF PTFE PAD AS SHOWN.
7. ONLY A TYPICAL SHOWING ONE END OF THE PIPE SUPPORTS IS SHOWN.
8. DRILLING OF HOLES FOR BOLTS SHALL TAKE PLACE PRIOR TO ANY GALVANISING SUPPORTS.
9. A MINIMUM OF THREE (3) AND A MAXIMUM OF FIVE (5) THREAD LENGTHS SHALL PROJECT THROUGH NUTS AT ALL TIMES.
10. THE PTFE PAD SHALL COVER THE TOP OF ENTIRE LENGTH AND WIDTH OF PIPE SUPPORT.
11. PTFE PAD SHALL BE INSTALLED PRIOR TO THE INSTALATION OF ANY PIPE.

PL SPECIFICATIONS

PL 912 PIPING SUPPLY AND INSTALLATION SPECIFICATION

DESIGNER			
RESP. ENG			
PROJ. MANAGER			
CLIENT			
ROLE	NAME	SIGN	DATE

DRAWING APPROVAL STATUS

PROJECT: TRANSET PIPELINE HW FIRE

A3 TITLE: PTFE PAD DETAIL TYPICAL DRAWING

SCALE: As indicated

CAD FILE: HO1436-TPL_2024_09_0008_77334_RFP-FAT-0001

PROJECT No: 11364

CHECKED: BJ

DESIGN-DRAWN: HS - HS

DRAWING No: 11364-A1086

REV: B

APPROVED: BJ

DATE: 2025-08-18

GREYJONES (PTY) LTD.
admin@greyjones.co.za www.greyjones.co.za
(031) 816 9386

REVISIONS

REV	DATE	BY	CHK	DESCRIPTION
A	2025-08-22	HS	BJ	ISSUED FOR ACCEPTANCE
B	2025-09-10	HS	BJ	ISSUED AFTER PJ COMMENTS

TRANSNET pipelines

PROJECT NAME: HW FIRE

DRAWN		REF.	
TRACED		DATE	
CHECKED		APPROVED	
SCALE			
TPL DRAWING No. HO1436-TYP-FP-DE-0019			REV

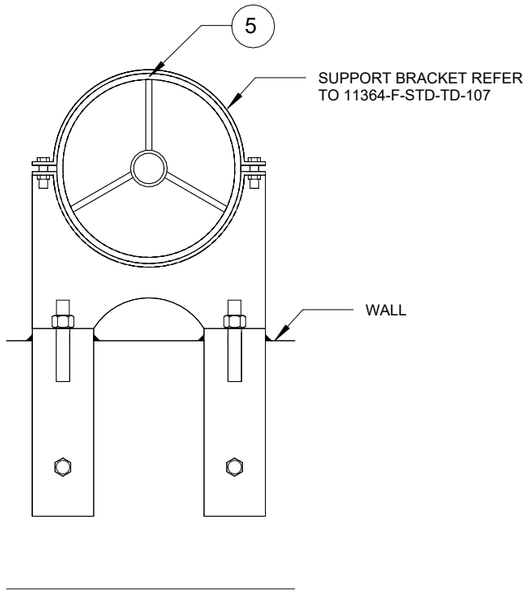

FRONT VIEW

SCALE: N.T.S

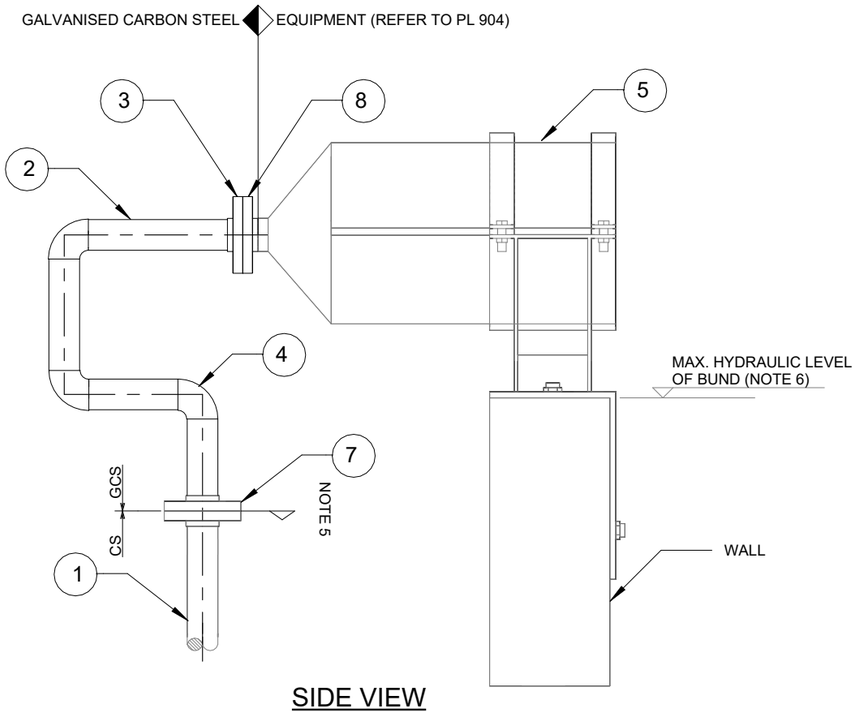

SIDE VIEW

SCALE: N.T.S

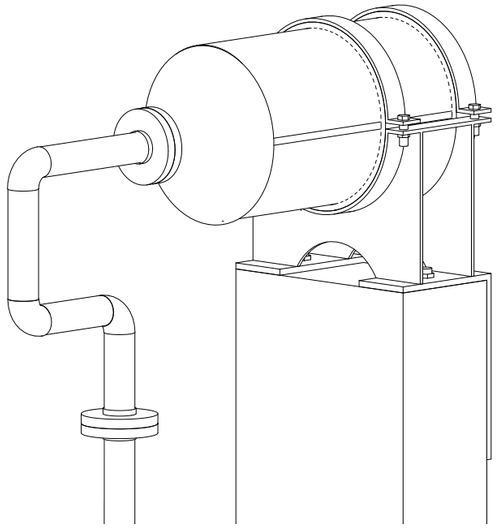

VIEW SHOWING BUND POURER CONNECTION

SCALE: N.T.S

DRAWING NOTES

1. ALL DIMENSIONS ARE IN MILLIMETRES.
2. THERE SHALL BE NO SHARP EDGES.
3. ALL ROLLED PLATE SHALL HAVE A CONTINUOUS RADIUS AND SHALL MATE FULLY WITH MATING PLATE.
4. THE POURER BRACKETS SHALL BE MOUNTED AND THE POURER INSTALLED BEFORE THE PIPING TO THE POURER IS COMPLETED. THE PIPING SHALL BE ADJUSTED AS REQUIRED IN ORDER TO SUIT THE INSTALLED POSITION.
5. REFER TO ISOMETRIC FOR CONTINUATION DETAILS.
6. THIS DOES NOT CORRESPOND TO INTERMEDIATE BUND WALL HYDRAULIC LEVEL.

PL SPECIFICATIONS

PL 904 FOAM GENERATING EQUIPMENT SPECIFICATION

PL 912 FIRE DEPARTMENT INTERFACE EQUIPMENT SPECIFICATION

BILL OF MATERIALS

ITEM	MATERIAL	DESCRIPTION
1	IN ACCORDANCE WITH PL 912	CARBON STEEL PIPE (SIZE TO MATCH BUND POURER)
2	IN ACCORDANCE WITH PL 912	GALVANISED CARBON STEEL PIPE (SIZE TO MATCH BUND POURER)
3	IN ACCORDANCE WITH PL 912	SLIP-ON RAISED FACE FLANGE (SIZE TO MATCH PIPE SIZE)
4	IN ACCORDANCE WITH PL 912	ELBOW (SIZE TO MATCH PIPE SIZE)
5	IN ACCORDANCE WITH PL 904	BUND POURER
6	IN ACCORDANCE WITH PL 912	COMPLETE BOLTS, NUTS AND WASHERS SET TO SUIT FLANGES
7	IN ACCORDANCE WITH PL 912	ORIFICE PLATE
8	IN ACCORDANCE WITH PL 912	BSP TAPER FEMALE THREADED FLANGE OR TO SUIT EQUIPMENT(SIZE TO MATCH BUND POURER)

DESIGNER			
RESP. ENG			
PROJ. MANAGER			
CLIENT			
ROLE	NAME	SIGN	DATE

DRAWING APPROVAL STATUS

PROJECT: TRANSNET PIPELINES HW FIRE

A3 TITLE: BUND POURER CONNECTION TYPICAL DRAWING

SCALE	CHECKED:	APPROVED:
As indicated	BJ	BJ
CAD FILE: HO1436-TPL_2024_09_0008_77334_RFP-FAT-0001	DESIGN-DRAWN: HS - HS	DATE: 2025-07-14
PROJECT No: 11364	DRAWING No: 11364-A1087	REV: A

GREYJONES (PTY) LTD.
GREYJONES (PTY) LTD.
admin@greyjones.co.za www.greyjones.co.za
(031) 816 9386

REVISIONS

REV	DATE	BY	CHK	DESCRIPTION
A	2025-07-18	HS	BJ	ISSUED FOR ACCEPTANCE

TRANSNET pipelines

PROJECT NAME
HW FIRE

DRAWN		REF.	
TRACED		DATE	
CHECKED		APPROVED	
SCALE			
TPL DRAWING No. HO1436-TYP-FP-DE-0020		REV	

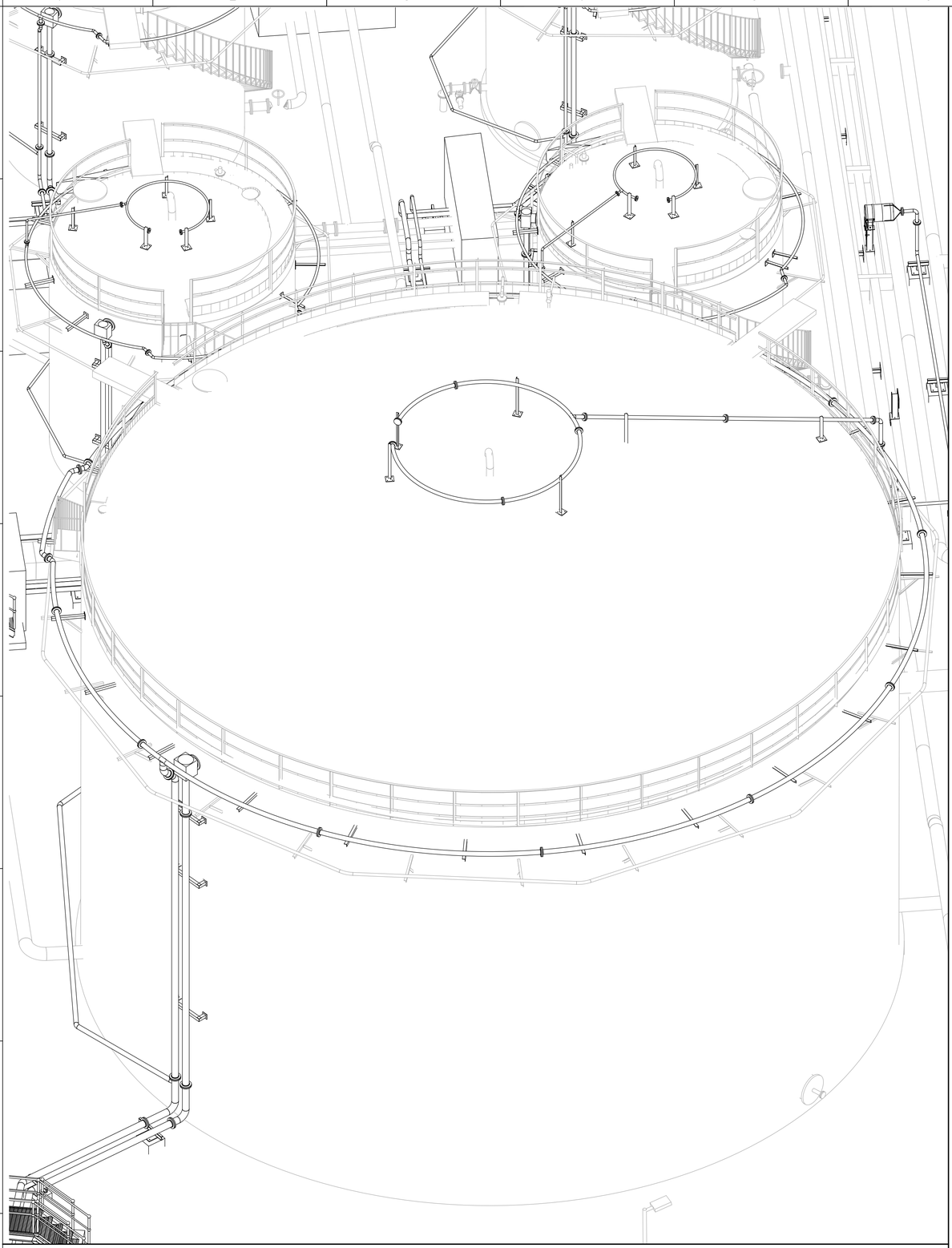

TANK 3D VIEW

SCALE: N.T.S

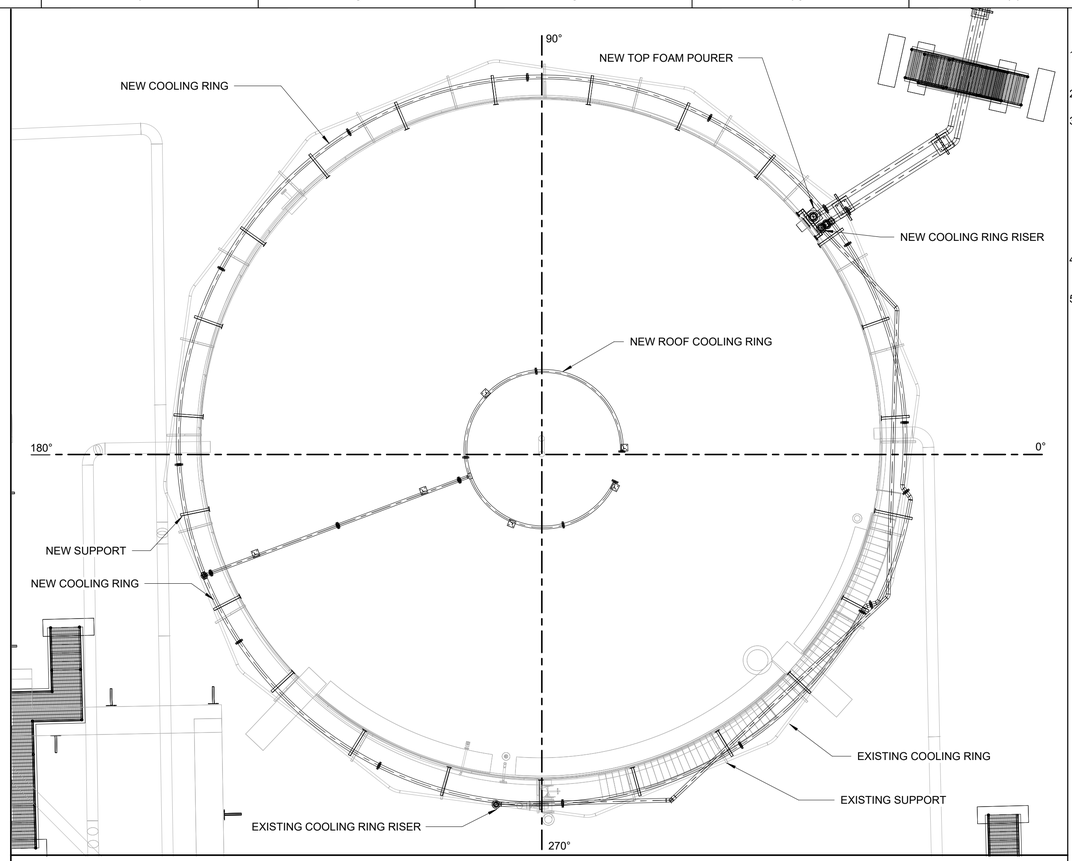

TANK PLAN VIEW

SCALE: N.T.S

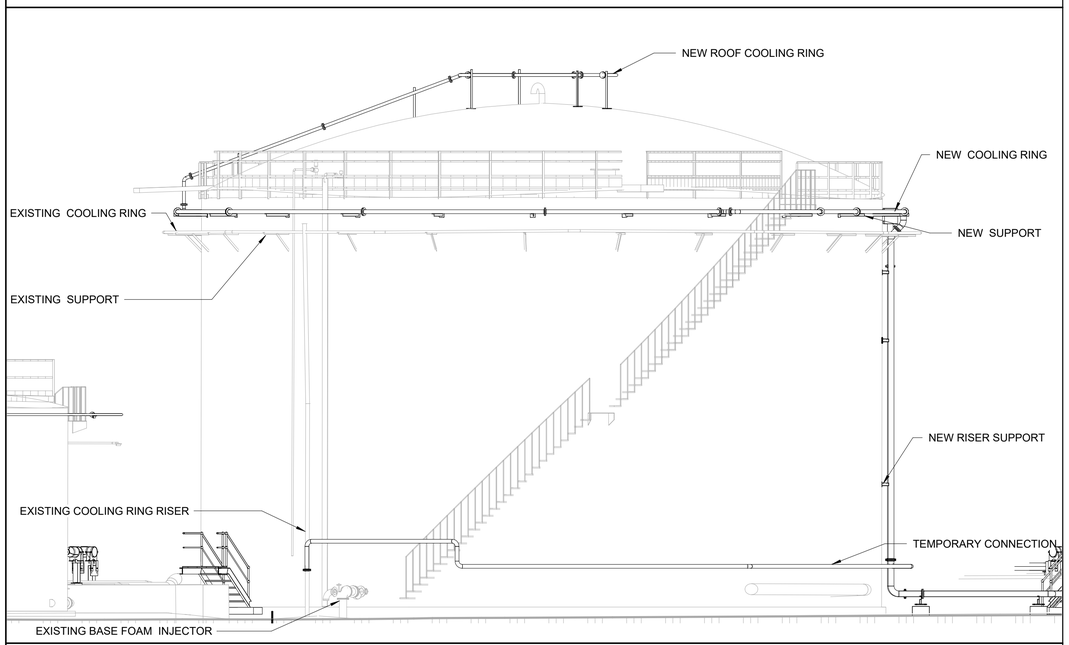

TANK SIDE VIEW

SCALE: N.T.S

DRAWING NOTES

1. ROOF COOLING SUPPORTS TO BE INSTALLED PLUMB. SUPPORT BASE TO BE ANGLED TO SUIT.
2. ALL DIMENSIONS ARE SHOWN IN MILLIMETRES.
3. ALL SUPPORT MATERIAL TO BE PAINTED. ALL PAINTING AND/OR COATING TO COMPLY WITH PROJECTT SPECIFICATION. TANK CORROSION PROTECTION SYSTEM TO BE USED ON SUPPORT MATERIALS. COMPLETE CORROSION PROTECTION SYSTEM TO APPLIED PRIOR TO INSTALLATION OF PTFE PAD AND PIPE.
4. CONTRACTOR TO RADIUS ROOF COOLING RISER TO SUIT TANK ROOF.
5. COOLING RING TO BE SUPPORTED OFF EXISTING STAIRWAY. CONTRACTOR TO DESIGN SUITABLE SUPPORTS.

DESIGNER			
RESP. ENG			
PROJ. MANAGER			
CLIENT			
ROLE	NAME	SIGN	DATE
DRAWING APPROVAL STATUS			

A1

PROJECT:
TRANSNET PIPELINES WITBANK
HW FIRE

TITLE:
TYPICAL ARRANGEMENT OF TOP FOAM POURER AND TANK COOLING RING

SCALE	CHECKED:	APPROVED:
As indicated	BJ	BJ
CAD FILE: HO1436-TPL_2024_09_0008_77334_RFP-FAT-0001	DESIGN-DRAWN: HS - HS	DATE: 2025-11-06
PROJECT No: 11364	DRAWING No: 11364-A1182	REV: A

GREYJONES (PTY) LTD.
GREYJONES (PTY) LTD.
(031) 816 9386 admin@greyjones.co.za www.greyjones.co.za

REFERENCES

DWG NUMBER	DESCRIPTION
-	-
-	-
-	-
-	-
-	-
-	-
-	-
-	-
-	-

REVISIONS

REV	DATE	BY	CHK	DESCRIPTION
A	2025-02-10	HS	BJ	ISSUED FOR ACCEPTANCE

TRANSNET pipelines

PROJECT NAME
HW FIRE

DRAWN		REF.	
TRACED		DATE	
CHECKED		APPROVED	
SCALE			
TPL DRAWING No. N/A			REV N/A

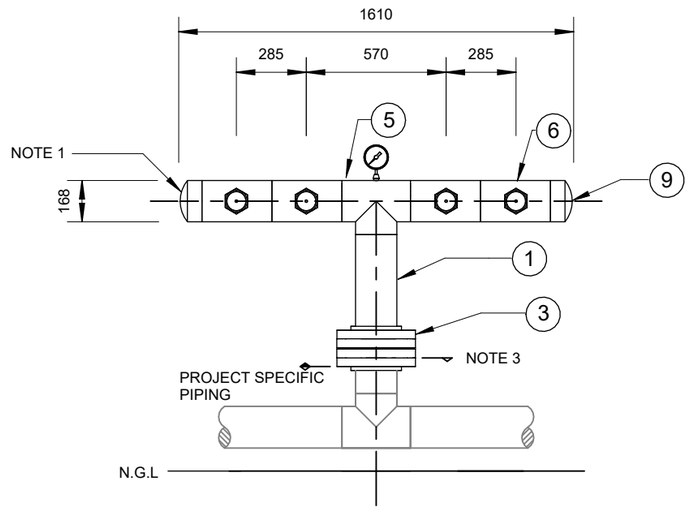

FRONT VIEW

SCALE: N.T.S

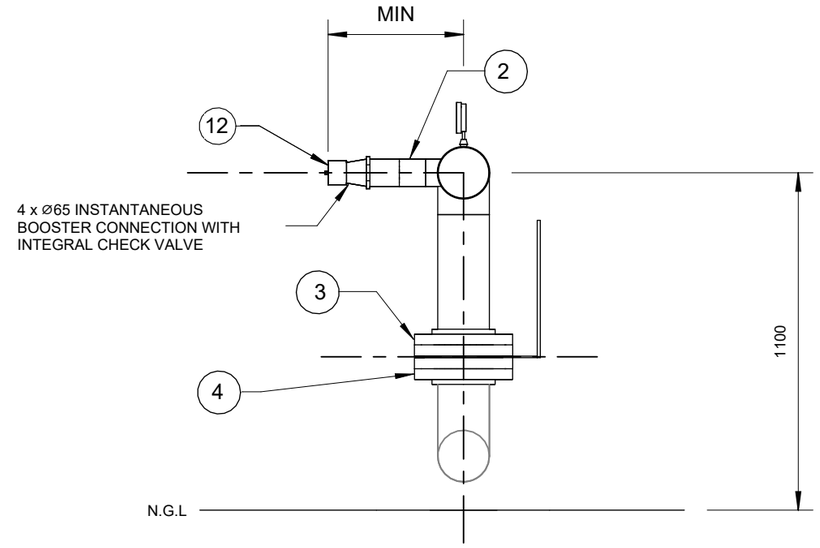

SIDE VIEW

SCALE: N.T.S

DRAWING NOTES

1. DRILL AND TAP END CAP TO SUIT 150NB PLUG. SUPPLY AND INSTALL PLUG USING HEMP AND STAG.
2. CONTRACTOR TO DESIGN BOOSTER CONNECTION TO SUIT PIPING CHANGE. BOOSTER CONNECTION TO MAINTAIN THE STANDARD HEIGHT.
3. REFER TO ISOMETRIC FOR CONTINUATION DETAILS.
4. CONTRACTOR TO DETERMINE DURING DETAILED DESIGN.

PL SPECIFICATIONS

PL 898	BUTTERFLY VALVE SPECIFICATION
PL 909	PRESSURE GAUGE SPECIFICATION
PL 910	FIRE DEPARTMENT INTERFACE EQUIPMENT SPECIFICATION
PL 912	PIPING SUPPLY AND INSTALLATION SPECIFICATION

PROCESS DATA	
PROCESS FLUID	WATER
DESIGN PRESSURE	NOTE 4 - REFER PL 912
TEST PRESSURE	NOTE 4 - REFER PL 912
DESIGN TEMP	NOTE 4 - REFER PL 912
FLUID GROUP	NOTE 4
SANS 347 CAT	NOTE 4
CORROSION PROTECTION SYSTEM	REFER PL 912

BILL OF MATERIALS

ITEM	MATERIAL	DESCRIPTION
1	IN ACCORDANCE WITH PL 912	150NB CARBON STEEL PIPE
2	IN ACCORDANCE WITH PL 912	80NB CARBON STEEL PIPE
3	IN ACCORDANCE WITH PL 912	150NB SLIP-ON RAISED FACE FLANGE
4	IN ACCORDANCE WITH PL 898	150NB BUTTERFLY VALVE
5	IN ACCORDANCE WITH PL 912	150NB EQUAL TEE
6	IN ACCORDANCE WITH PL 912	150x80NB REDUCING TEE
7	IN ACCORDANCE WITH PL 912	150x15 THREDOLET
8	IN ACCORDANCE WITH PL 912	150NB GASKET 3mm THICK
9	IN ACCORDANCE WITH PL 912	150NB END CAP
10	IN ACCORDANCE WITH PL 912	COMPLETE BOLTS, NUTS AND WASHERS SET TO SUIT 150NB FLANGE
11	IN ACCORDANCE WITH PL 912	COMPLETE BOLTS, NUTS AND WASHERS SET TO SUIT 80NB FLANGE
12	IN ACCORDANCE WITH PL 910	BOOSTER CONNECTION
13	IN ACCORDANCE WITH PL 909	PRESSURE GAUGE

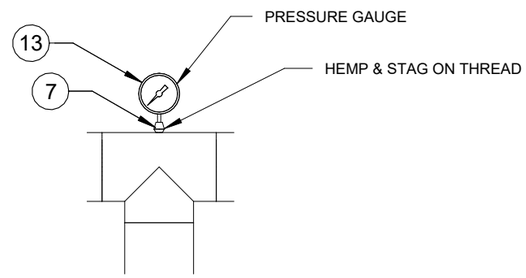

PRESSURE GAUGE DETAIL

SCALE: N.T.S

DESIGNER			
RESP. ENG			
PROJ. MANAGER			
CLIENT			
ROLE	NAME	SIGN	DATE

DRAWING APPROVAL STATUS

PROJECT:
TRANSNET PIPELINES
HW FIRE

A3

TITLE:
FIRE RING MAIN BOOSTER CONNECTION
ALTERNATIVE DRAWING

SCALE	CHECKED:	APPROVED:
As indicated	BJ	BJ
CAD FILE: HO1436-TPL_2024_09_0008_77334_RFP-FAT-0001	DESIGN-DRAWN: HS - HS	DATE: 2025-07-14
PROJECT No: 11364	DRAWING No: 11364-A1164	REV: A

GREYJONES (PTY) LTD.
admin@greyjones.co.za www.greyjones.co.za
(031) 816 9386

REVISIONS

REV	DATE	BY	CHK	DESCRIPTION
A	2026-01-12	HS	BJ	ISSUED FOR ACCEPTANCE

TRANSNET pipelines

PROJECT NAME
HW FIRE

DRAWN		REF.	
TRACED		DATE	
CHECKED		APPROVED	
SCALE			
TPL DRAWING No. HO1436-TYP-FP-DE-0001			REV

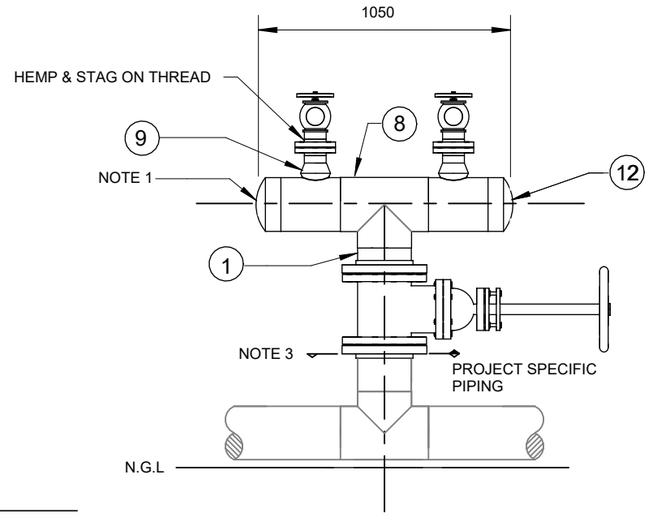

FRONT VIEW

SCALE: N.T.S

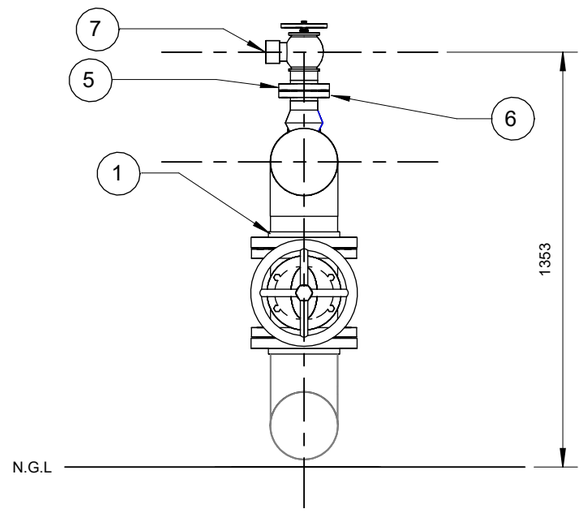

SIDE VIEW

SCALE: N.T.S

DRAWING NOTES

1. DRILL AND TAP END CAP TO SUIT 150NB PLUG. SUPPLY AND INSTALL PLUG USING HEMP AND STAG.
2. CONTRACTOR TO DESIGN FIRE SERVICE SUCTION CONNECTION TO SUIT PIPING CHANGE. FIRE SERVICE SUCTION CONNECTION TO MAINTAIN THE STANDARD HEIGHT.
3. REFER TO ISOMETRIC FOR CONTINUATION DETAILS.
4. CONTRACTOR TO DETERMINE DURING DETAILED DESIGN.

PL SPECIFICATIONS

PL 900	GATE VALVE SPECIFICATION
PL 910	FIRE DEPARTMENT INTERFACE EQUIPMENT SPECIFICATION
PL 912	PIPING SUPPLY AND INSTALLATION SPECIFICATION

PROCESS DATA	
PROCESS FLUID	WATER
DESIGN PRESSURE	NOTE 4 - REFER PL 912
TEST PRESSURE	NOTE 4 - REFER PL 912
DESIGN TEMP	NOTE 4 - REFER PL 912
FLUID GROUP	NOTE 4
SANS 347 CAT	NOTE 4
CORROSION PROTECTION SYSTEM	REFER PL 912

BILL OF MATERIALS

ITEM	MATERIAL	DESCRIPTION
1	IN ACCORDANCE WITH PL 912	200NB CARBON STEEL PIPE
2	IN ACCORDANCE WITH PL 912	80NB CARBON STEEL PIPE
3	IN ACCORDANCE WITH PL 912	200NB SLIP-ON RAISED FACE FLANGE
4	IN ACCORDANCE WITH PL 900	200NB GATE VALVE
5	IN ACCORDANCE WITH PL 912	80NB SLIP-ON RAISED FACE FLANGE
6	IN ACCORDANCE WITH PL 912	80NB THREADED RAISED FACE FLANGE
7	IN ACCORDANCE WITH PL 910	HYDRANT VALVE
8	IN ACCORDANCE WITH PL 912	200NB EQUAL TEE
9	IN ACCORDANCE WITH PL 912	200x80 WELDOLET
10	IN ACCORDANCE WITH PL 912	200NB GASKET 3mm THICK
11	IN ACCORDANCE WITH PL 912	80NB GASKET 3mm THICK
12	IN ACCORDANCE WITH PL 912	200NB END CAP
13	IN ACCORDANCE WITH PL 912	COMPLETE NUTS, BOLTS AND WASHERS SETS TO SUIT 80NB FLANGE
14	IN ACCORDANCE WITH PL 912	COMPLETE NUTS, BOLTS AND WASHERS SETS TO SUIT 200NB FLANGE

DESIGNER			
RESP. ENG			
PROJ. MANAGER			
CLIENT			
ROLE	NAME	SIGN	DATE

DRAWING APPROVAL STATUS

PROJECT:
TRANSNET PIPELINES
HW FIRE

A3

TITLE:
FIRE SERVICE SUCTION ALTERNATIVE DRAWING

SCALE	CHECKED:	APPROVED:
As indicated	BJ	BJ
CAD FILE: HO1436-TPL_2024_09_0008_77334_RFP-FAT-0001	DESIGN-DRAWN: HS - HS	DATE: 2025-07-14
PROJECT No: 11364	DRAWING No: 11364-A1165	REV: A

GREYJONES (PTY) LTD.
admin@greyjones.co.za www.greyjones.co.za
(031) 816 9386

REVISIONS

REV	DATE	BY	CHK	DESCRIPTION
A	2026-01-12	HS	BJ	ISSUED FOR ACCEPTANCE

TRANSNET pipelines

PROJECT NAME
HW FIRE

DRAWN		REF.	
TRACED		DATE	
CHECKED		APPROVED	
SCALE			
TPL DRAWING No. HO1436-TYP-FP-DE-0002			REV

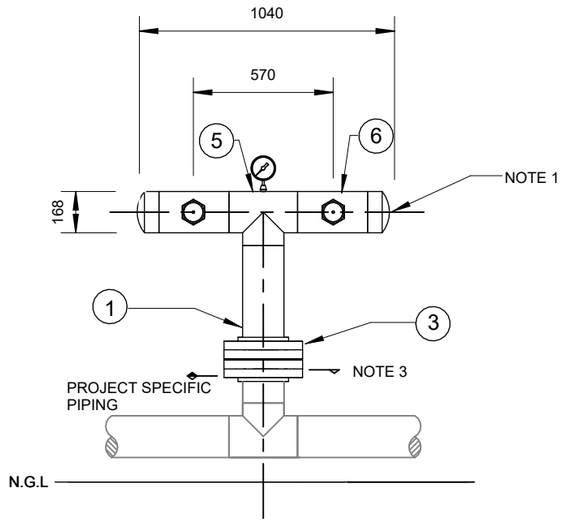

FRONT VIEW

SCALE: N.T.S

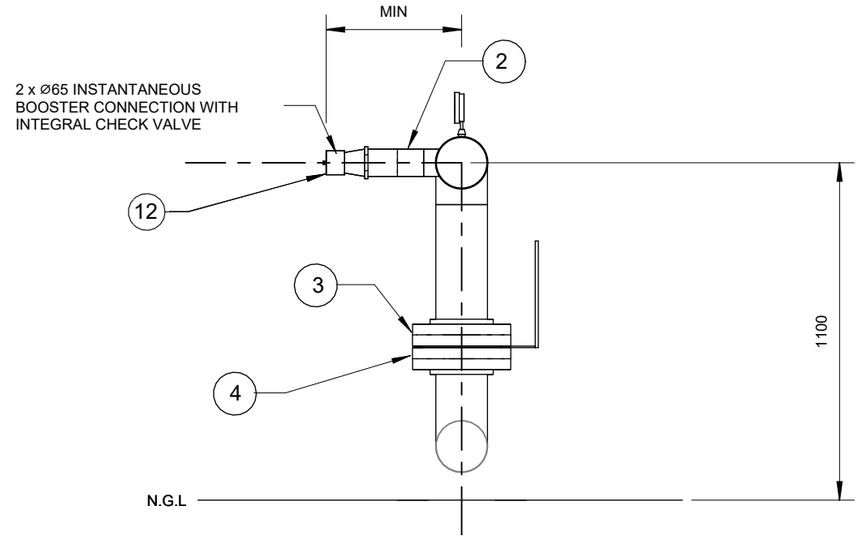

SIDE VIEW

SCALE: N.T.S

DRAWING NOTES

1 DRILL AND TAP END CAP TO SUIT 100NB PLUG. SUPPLY AND INSTALL PLUG USING HEMP AND STAG.

2 CONTRACTOR TO DESIGN FIRE WATER TANK REFILL CONECTION TO SUIT PIPING CHANGE. FIRE WATER TANK REFILL CONNECTION TO MAINTAIN THE STANDARD HEIGHT.

3 REFER TO ISOMETRIC FOR CONTINUATION DETAILS.

4 CONTRACTOR TO DETERMINE DURING DETAILED DESIGN.

PL SPECIFICATIONS

PL 898 BUTTERFLY VALVE SPECIFICATION

PL 909 PRESSURE GAUGE SPECIFICATION

PL 910 FIRE DEPARTMENT INTERFACE EQUIPMENT SPECIFICATION

PL 912 PIPING SPECIFICATION PIPING SUPPLY AND INSTALLATION SPECIFICATION

PROCESS DATA	
PROCESS FLUID	WATER
DESIGN PRESSURE	NOTE 4 - REFER PL 912
TEST PRESSURE	NOTE 4 - REFER PL 912
DESIGN TEMP	NOTE 4 - REFER PL 912
FLUID GROUP	NOTE 4
SANS 347 CAT	NOTE 4
CORROSION PROTECTION SYSTEM	REFER PL 912

BILL OF MATERIALS

ITEM	MATERIAL	DESCRIPTION
1	IN ACCORDANCE WITH PL 912	100NB CARBON STEEL PIPE
2	IN ACCORDANCE WITH PL 912	80NB CARBON STEEL PIPE
3	IN ACCORDANCE WITH PL 912	100NB SLIP-ON RAISED FACE FLANGE
4	IN ACCORDANCE WITH PL 898	100NB BUTTERFLY VALVE
5	IN ACCORDANCE WITH PL 912	100NB EQUAL TEE
6	IN ACCORDANCE WITH PL 912	100x80NB REDUCING TEE
7	IN ACCORDANCE WITH PL 912	100x15 THREDOLET
8	IN ACCORDANCE WITH PL 912	100NB GASKET 3mm THICK
9	IN ACCORDANCE WITH PL 912	100NB END CAP
10	IN ACCORDANCE WITH PL 912	COMPLETE BOLTS, NUTS AND WASHERS SET TO SUIT 150NB FLANGE
11	IN ACCORDANCE WITH PL 912	COMPLETE BOLTS, NUTS AND WASHERS SET TO SUIT 80NB FLANGE
12	IN ACCORDANCE WITH PL 910	BOOSTER CONNECTION
13	IN ACCORDANCE WITH PL 909	PRESSURE GAUGE

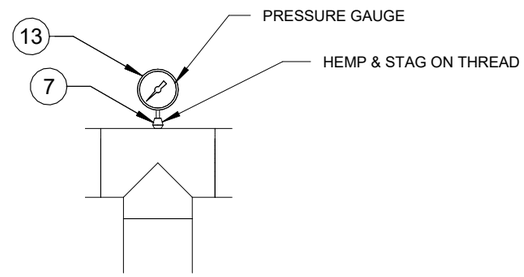

PRESSURE GAUGE DETAIL

SCALE: N.T.S

DESIGNER			
RESP. ENG			
PROJ. MANAGER			
CLIENT			
ROLE	NAME	SIGN	DATE

DRAWING APPROVAL STATUS

PROJECT:
TRANSNET PIPELINES
HW FIRE

A3

TITLE:
FIRE RING MAIN BOOSTER CONNECTION
ALTERNATIVE DRAWING

SCALE	CHECKED:	APPROVED:
As indicated	BJ	BJ
CAD FILE: HO1436-TPL_2024_09_0008_77334_RFP-FAT-0001	DESIGN-DRAWN: HS - HS	DATE: 2025-07-14
PROJECT No: 11364	DRAWING No: 11364-A1166	REV: A

GREYJONES (PTY) LTD.

GREYJONES (PTY) LTD.

admin@greyjones.co.za www.greyjones.co.za

(031) 816 9386

REVISIONS

REV	DATE	BY	CHK	DESCRIPTION
A	2026-01-12	HS	BJ	ISSUED FOR ACCEPTANCE

TRANSNET pipelines

PROJECT NAME
HW FIRE

DRAWN		REF.	
TRACED		DATE	
CHECKED		APPROVED	
SCALE			
TPL DRAWING No. HO1436-TYP-FP-DE-0003			REV

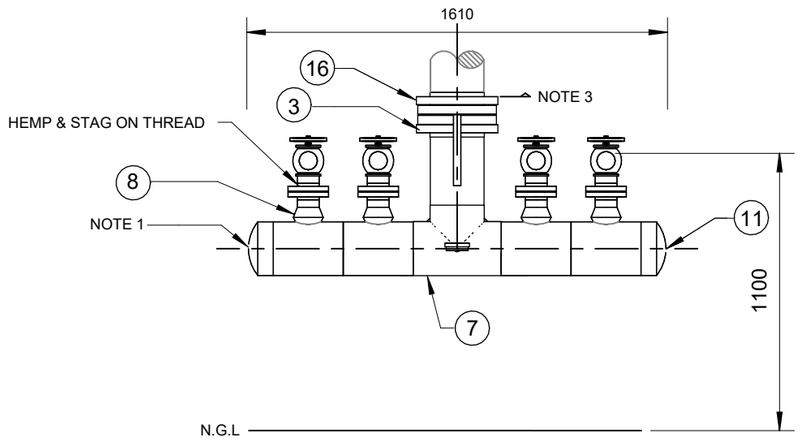

FRONT VIEW (OPTION 1)

SCALE: N.T.S

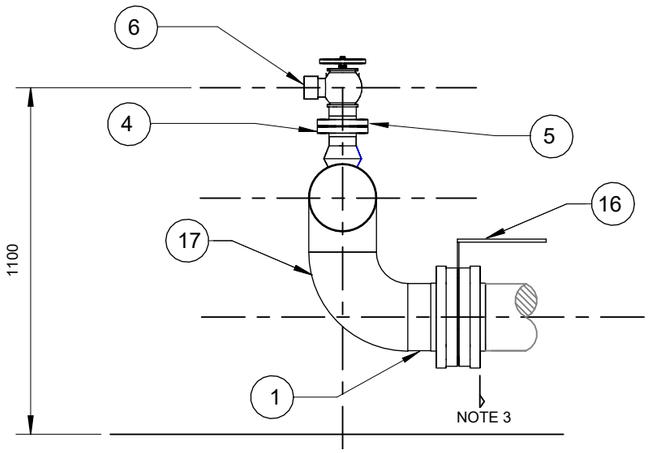

SIDE VIEW (OPTION 2)

SCALE: N.T.S

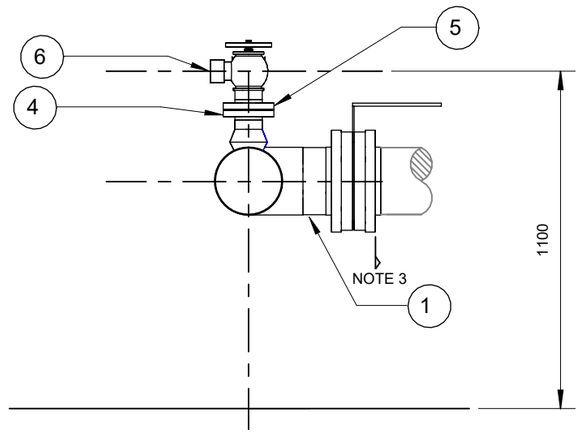

SIDE VIEW (OPTION 3)

SCALE: N.T.S

DRAWING NOTES

1 DRILL AND TAP END CAP TO SUIT 150NB PLUG. SUPPLY AND INSTALL PLUG USING HEMP AND STAG.

2 CONTRACTOR TO DESIGN FIRE HYDRANT TO SUIT PIPING CHANGE. FIRE HYDRANT TO MAINTAIN THE STANDARD HEIGHT.

3 REFER TO ISOMETRIC FOR CONTINUATION DETAILS.

3 REFER TO ISOMETRIC FOR CONTINUATION DETAILS.

4 CONTRACTOR TO DETERMINE DURING DETAILED DESIGN.

PL SPECIFICATIONS

PL 898 BUTTERFLY VALVE SPECIFICATION

PL 909 PRESSURE GAUGE SPECIFICATION

PL 910 FIRE DEPARTMENT INTERFACE EQUIPMENT SPECIFICATION

PL 912 PIPING SUPPLY AND INSTALLATION SPECIFICATION

PROCESS DATA	
PROCESS FLUID	WATER
DESIGN PRESSURE	NOTE 4 - REFER PL 912
TEST PRESSURE	NOTE 4 - REFER PL 912
DESIGN TEMP	NOTE 4 - REFER PL 912
FLUID GROUP	NOTE 4
SANS 347 CAT	NOTE 4
CORROSION PROTECTION SYSTEM	REFER PL 912

BILL OF MATERIALS

ITEM	MATERIAL	DESCRIPTION
1	IN ACCORDANCE WITH PL 912	150NB CARBON STEEL PIPE
2	IN ACCORDANCE WITH PL 912	80NB CARBON STEEL PIPE
3	IN ACCORDANCE WITH PL 912	150NB SLIP-ON RAISED FACE FLANGE
4	IN ACCORDANCE WITH PL 912	80NB SLIP-ON RAISED FACE FLANGE
5	IN ACCORDANCE WITH PL 912	80NB THREADED RAISED FACE FLANGE
6	IN ACCORDANCE WITH PL 910	HYDRANT VALVE
7	IN ACCORDANCE WITH PL 912	150NB EQUAL TEE
8	IN ACCORDANCE WITH PL 912	150x80 WELDOLET
9	IN ACCORDANCE WITH PL 912	150NB GASKET 3mm THICK
10	IN ACCORDANCE WITH PL 912	80NB GASKET 3mm THICK
11	IN ACCORDANCE WITH PL 912	150NB END CAP
12	IN ACCORDANCE WITH PL 912	COMPLETE NUTS, BOLTS AND WASHERS SETS TO SUIT 80NB FLANGE
13	IN ACCORDANCE WITH PL 912	COMPLETE NUTS, BOLTS AND WASHERS SETS TO SUIT 200NB FLANGE
14	IN ACCORDANCE WITH PL 909	PRESSURE GAUGE
15	IN ACCORDANCE WITH PL 912	150x15 THREDOLET
16	IN ACCORDANCE WITH PL 898	150NB BUTTERFLY VALVE
17	IN ACCORDANCE WITH PL 912	150NB ELBOW

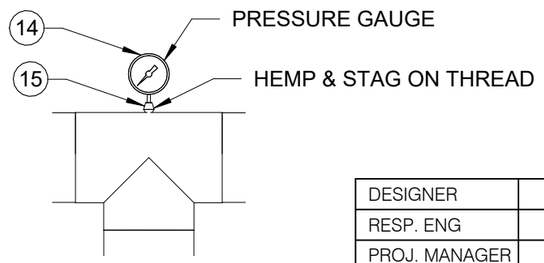

PRESSURE GAUGE DETAIL

SCALE: N.T.S

DESIGNER			
RESP. ENG			
PROJ. MANAGER			
CLIENT			
ROLE	NAME	SIGN	DATE

DRAWING APPROVAL STATUS

PROJECT:
TRANSNET PIPELINES
HW FIRE

A3

TITLE:
FIRE HYDRANT ALTERNATIVE DRAWING

SCALE	CHECKED:	APPROVED:
As indicated	BJ	BJ
CAD FILE: HO1436-TPL_2024_09_0008_77334_RFP-FAT-0001	DESIGN-DRAWN: HS - HS	DATE: 2025-07-14
PROJECT No: 11364	DRAWING No: 11364-A1167	REV: A

GREYJONES (PTY) LTD.
admin@greyjones.co.za www.greyjones.co.za
(031) 816 9386

REVISIONS

REV	DATE	BY	CHK	DESCRIPTION
A	2026-01-12	HS	BJ	ISSUED FOR ACCEPTANCE

TRANSNET pipelines

PROJECT NAME
HW FIRE

DRAWN		REF.	
TRACED		DATE	
CHECKED		APPROVED	
SCALE			
TPL DRAWING No. HO1436-TYP-FP-DE-0009			REV