A3

NOTE:
1. REMOVE ALL SHARP EDGES.
2. ITEMS TO BE TAGGED: 7650112 OR 7650106.
3. DESCRIPTION: DRUM 20 LITRE 0.5 GAUGE WITH LEVER ACTION CLOSING RING.
4. 07765011207– WHITE DRUM FOR THE PACKING OF LEAD AZIDE/ LEAD STYPHNATE.
   07765010602– BLACK DRUM FOR THE PACKING OF HEXAL P30.

DO NOT SCALE
ALL DIMENSIONS ARE IN mm.

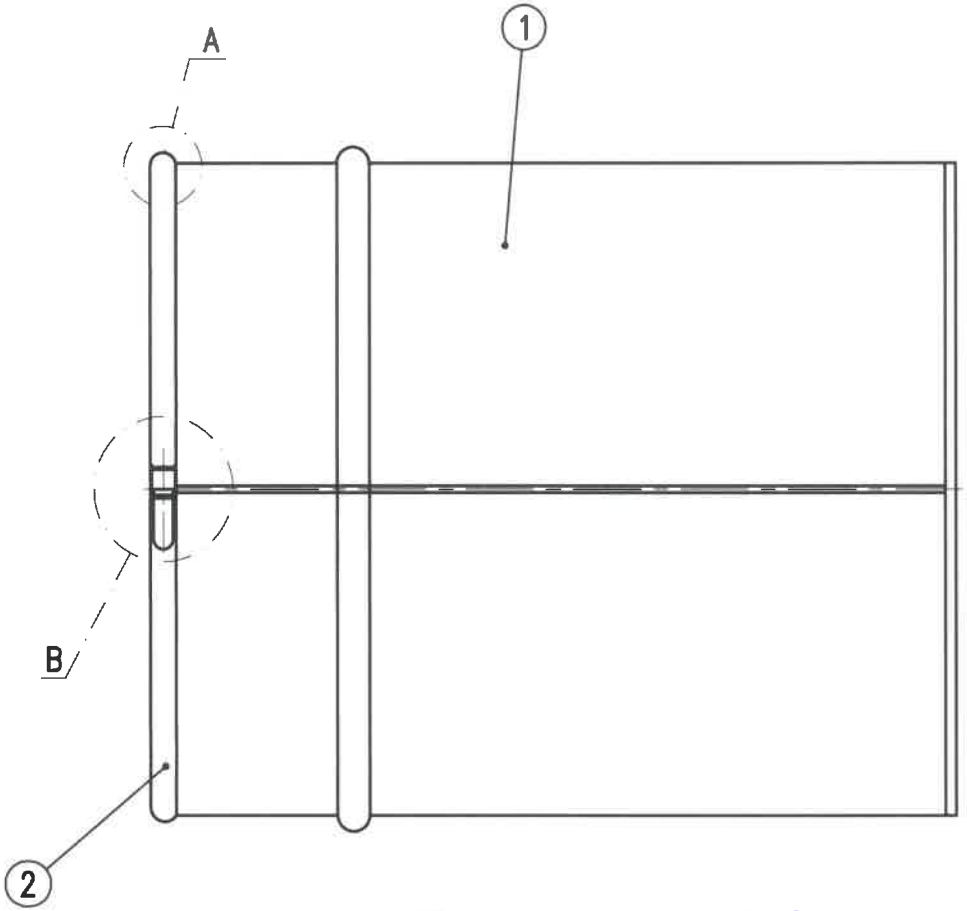

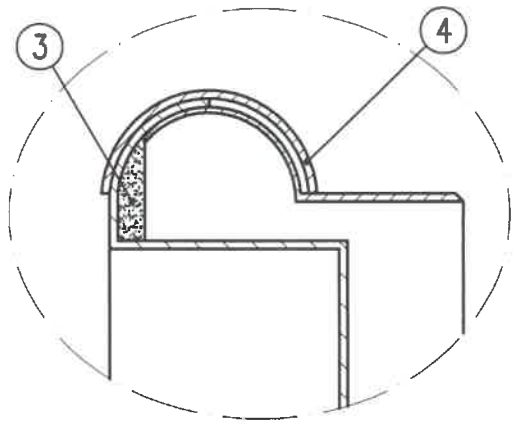

ENLARGED SECTION DETAIL A

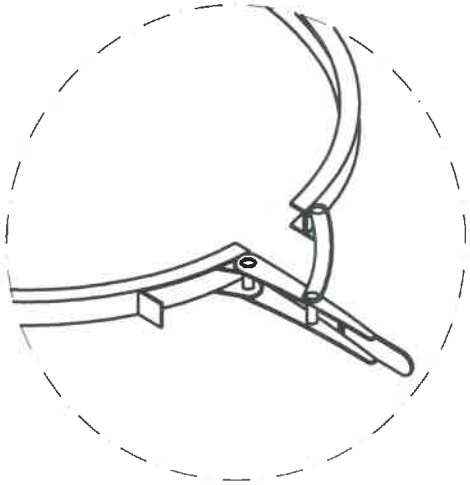

ENLARGED DETAIL B

Should a Tenderer/Vendor not be able to meet the requirements of this document, it must declared in writing to the Buying Manager at the time of tendering/receipt of an order.

TENDER
DATE: 2022-08-
COPY NO 2
ISSUED BY. TP

ITEM No.	DESCRIPTION	DRAWING No.	REMARKS	Qty
4	RING CLAMPING			1
3	RUBBER SILICON CASTED			1
2	LID– 20 LITRE DRUM	04336–98010001203005	SEE NOTE 4	1
1	BODY– 20 LITRE DRUM	04336–98010001–203004	SEE NOTE 3 AND 4	1

DONE BY | DETAILS | DATE. | APP. | REV.

√ [√][√] HRC

PRODUCT: LEAD AZIDE/ LEAD STYPHNATE OR HEXAL P30

NEXT ASSY | REPLACES DRG. No.

JOB No. KB/015/21MC | MATERIAL | MACHINE

DRAWN MVD 2021-06-03 | CHECKED LPS 2021-06-04 | APPROVED MGV 2021-06-08 | FINALIZED | PROJECT LEADER | CODE No. SEE NOTE 4 | SCREEN DRG. No. | CAD No.

TITLE: DRUM 20 LITRE ASSEMBLY

DRG No. 04336–98010001–201002 | REV.

GENERAL TOLERANCES (UNLESS OTHERWISE STATED)

LENGTHS AND DIAMETERS							ANGLES		RADII				
0 TO 6	6 TO 30	30 TO 120	120 TO 315	315 TO 1000	1000 TO 2000	2000 TO 4000	4000 AND MORE	0° TO 30°	30° AND MORE	1 TO 6	6 TO 30	30 TO 100	100 TO 300	300 TO 1000

ALL GEOMETRIC TOLERANCES TO BE WITHIN 0.1

DENEL PMP

THIS DRAWING IS THE PROPERTY OF PRETORIA METAL PRESSINGS A DIVISION OF DENEL SOC Ltd AND MAY NOT BE COPIED OR USED FOR ANY PURPOSE