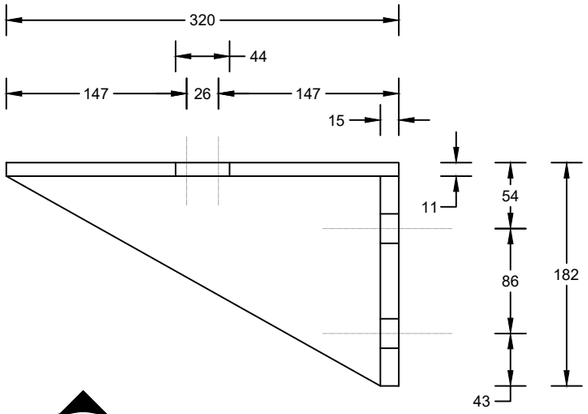

D1 / 01 BRACKET SIDE VIEW

1:5

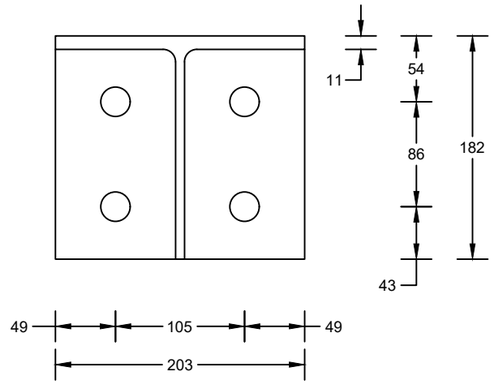

D2 / 01 BRACKET FRONT VIEW

1:5

NOTES

1. ALL MEASUREMENTS TO BE CONFIRMED ON SITE BEFORE MANUFACTURE.
2. SHOP DRAWINGS MUST BE SUBMITTED TO THE ENGIEER PRIOR TO MANUFACTURE.
3. ALL STEEL TO BE GRADE S355JR, HOT DIP GALVANISED AND PAINTED TO SUIT EXISTING STEEL ON SITE.
4. ALL WORK MUST BE CARRIED OUT IN STRICT ACCORDANCE WITH SANS 2001-CS1

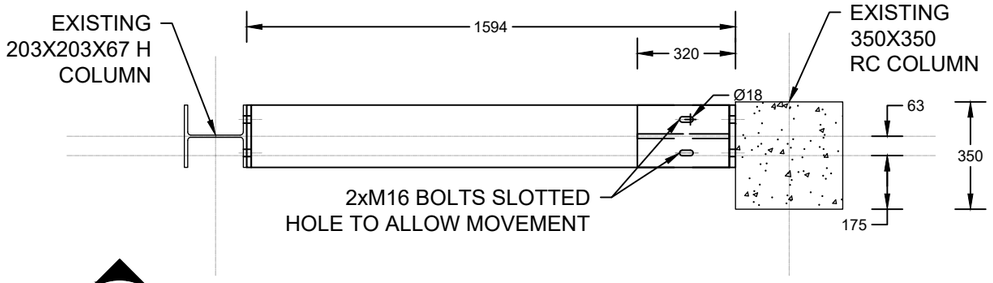

D3 / 01 BEAM PLAN VIEW

1:20

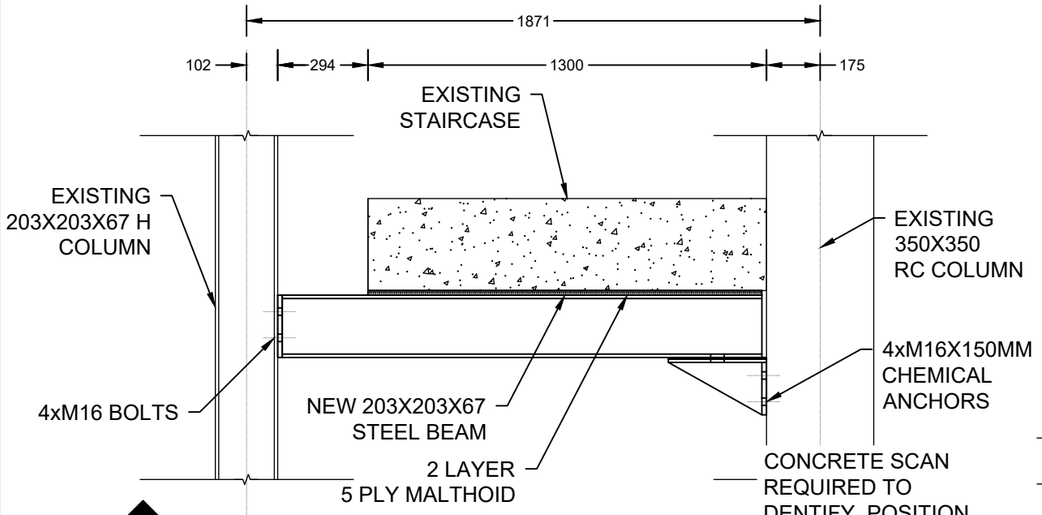

D4 / 01 BEAM SIDE VIEW

1:20

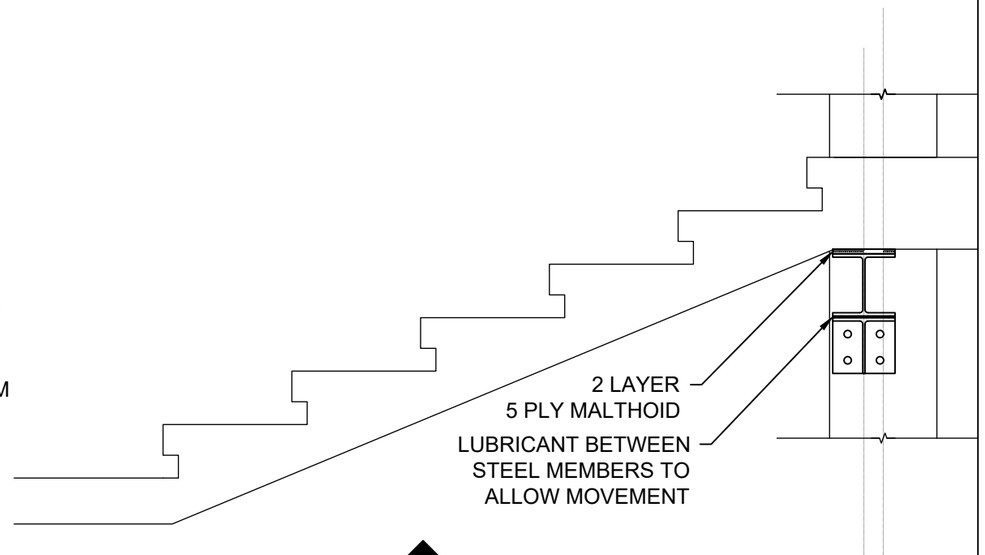

D5 / 01 BEAM TYPICAL SECTION

1:20

NOTES

1. THIS DRAWING MUST BE READ ALONG WITH THE PROJECT SPECIFICATIONS, OTHER ASSOCIATED DRAWINGS, MANUFACTURER'S INSTRUCTIONS AND ALL APPLICABLE LEGISLATION
2. ALL DIMENSIONS ARE IN MILLIMETRES UNLESS OTHERWISE NOTED

REV	DATE	REVISION DETAILS	REV BY
A	01-12-2024	ISSUED FOR INFORMATION	DS

REV	DATE	REVISION DETAILS	REV BY

Copyright vests in the
Department of Public Works

drawings
certified drawings as per Centralised Drawing
Archive SKETCH-PLAN DRAWING REQUIREMENTS

name :
date :
professional registration no :

CAD FILE NAME
DRAWING SIZE A3

DEPARTMENT OF PUBLIC WORKS
AND INFRASTRUCTURE

public works & infrastructure
Department:
Public Works and Infrastructure
REPUBLIC OF SOUTH AFRICA

CONSULTANT
IN-HOUSE

DISCIPLINE
STRUCTURAL ENGINEERING

SERVICE
GRAHAMSTOWN AMAZWI SOUTH AFRICAN MUSEUM FOR LITERATURE: CONDITION ASSESSMENT

WCS NUMBER
WCS 048851 PREVIOUS

DRAWING TITLE
ADMIN STAIRCASE SUPPORT DETAILS

REF. NO. 6403.5004.0.4K1
DESIGNED BY DS
SCALE AS SHOWN
DRAWN BY DS
DATE CREATED 18-12-2024
CHECKED BY

NDPWI DRAWING NUMBER NELM/01
REVISION A