ELEVATION NOTES:

1. SPACER MK 2 TO BE AT 2m CRS ON DROPPERS AND 8m (MIN.) CRS ON STRINGERS.

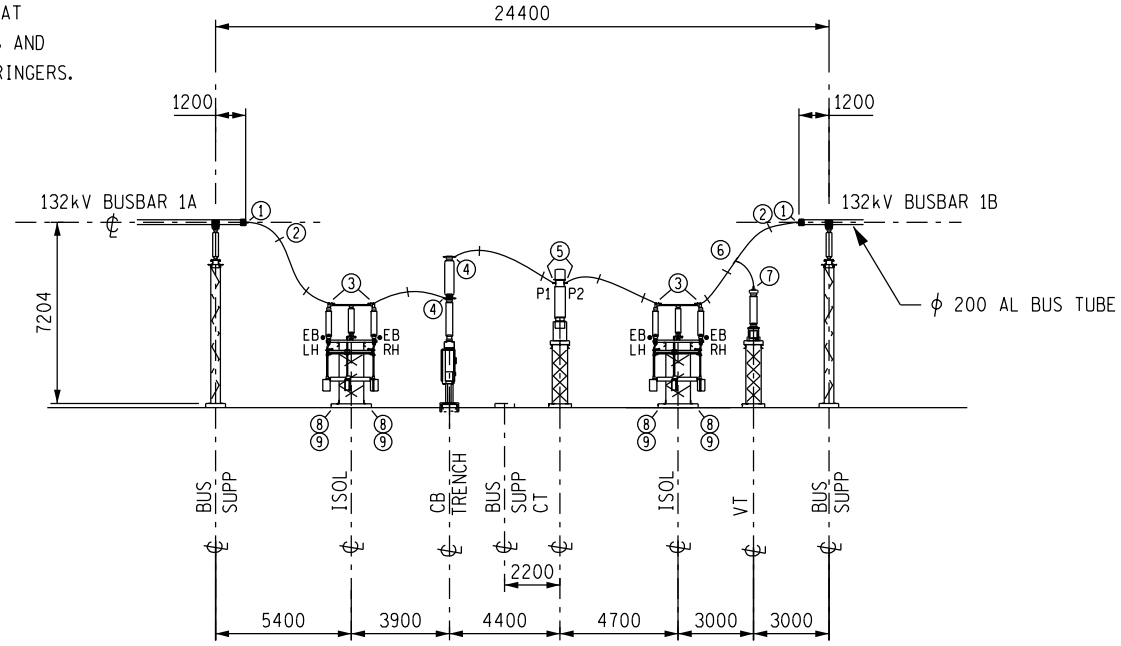

CONDUCTOR AND HARDWARE SCHEDULE		BAY DESIGNATION XX	
		SIZE	QUANTITY
CONDUCTOR	BUSBAR	2x800mm²	120m
	STRINGER AND DROPPER	2x800mm²	-
	EQUIPMENT EARTHING	50x3 Cu	31,5m

CLAMPS TO 240-53113923 AND 240-53113927				
DESCRIPTION	MK	ITEM	QUANTITY
ϕ200 TUBE TO 2Xϕ38 INLINE TYPE CLAMP WITH 45 TAP-OFF	1	ETP-TE-IL 2-V	6
TWIN CONDUCTOR SPACER	2	ES-B	27
	3	EYC-S	12
	4	EYC-S	6
	5	EYC-H	6
	6	ETC-K	3
	7	EX-L	3
EARTHING STUD (20kA)	8	--	36
STUD ADAPTOR TYPE B	9	--	12

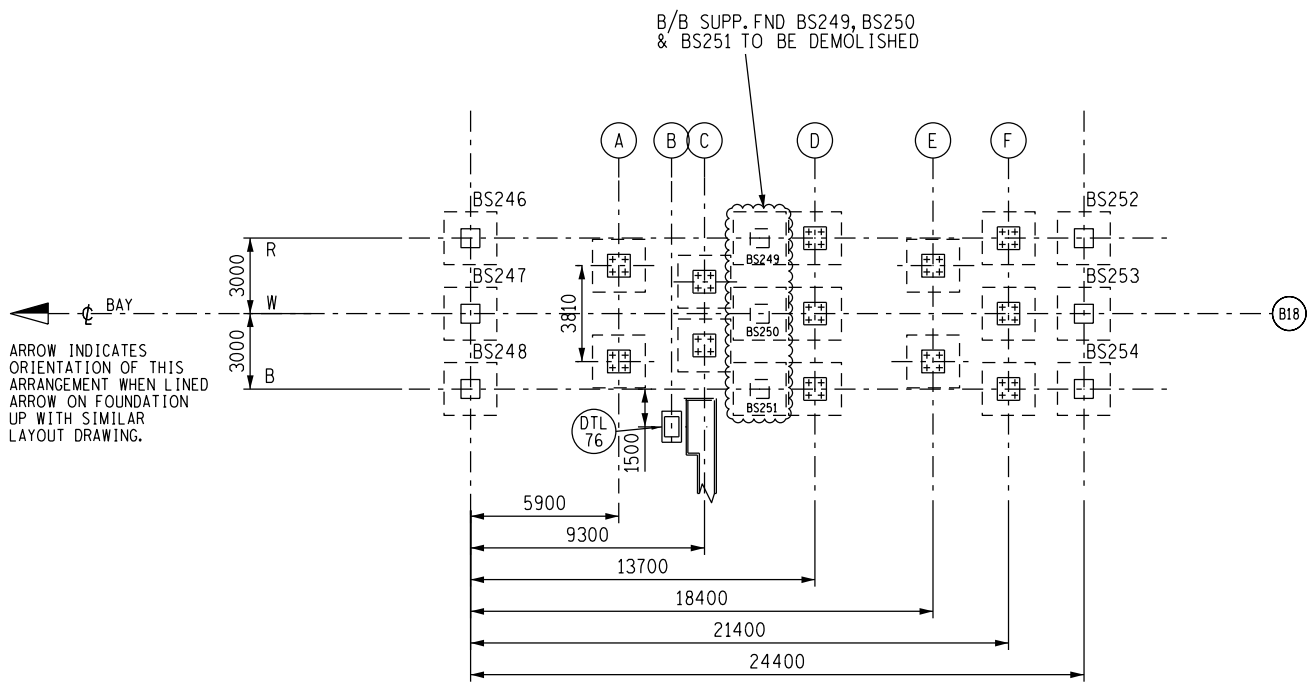

EQUIPMENT SUPPORT FOUNDATION PLAN

FOUNDATION PLAN NOTES:

1. ARROW INDICATES ORIENTATION OF THIS ARRGT WHEN LINED UP WITH SIMILAR ARROW ON FOUNDATION LAYOUT DRG.
2. EQUIPMENT FOUNDATION LEVEL TO BE 150mm ABOVE FINISHED TERRACE LEVEL EXCEPT WHERE OTHERWISE SHOWN ON ELEVATION. THE THREE SEPARATE BASES FOR THE SAME ITEM OF EQUIPMENT ARE TO BE AT THE SAME LEVEL. (EG.: CT BASES ON ALL THREE PHASES.)
3. FOR BUS SUPPORT FOUNDATIONS REFER TO FOUND LAYOUT - Moo21P05-SE-D8

		3000 CTRS				3000 CTRS	
FOUNDATION		A	B	C	D	E	F
FOUNDATION DRG No 0.54/		4358	4713 SHT 5	4358	4358	4358	4358
EQUIPMENT		ISOL (2ES)	JB 8100	CB	CT	ISOL (2ES)	VT
EQUIPMENT RATING	AMPS	2500	——	3150	2500	2500	——
	kA	40	——	40	40	40	——
EQUIPMENT STEM/PAD SIZE		8HHP		8HHP	ϕ60	8HHP	ϕ26
MAKER		ACTOM		SIEMENS	HVT	ACTOM	MEGA HVT
OUTLINE DRG No. 0.54/		9984		10122	9606	9984	9505
STEELWORK DRG No 0.54/	SUPPORT	302	——	301	302	302	302
	CAP/ADAPTOR	10103	——	307	306	10103	306

R Ramnarain
04/04/2023

DETAIL DESIGN
NOT FOR CONSTRUCTION
ORIGINAL DWG #: N/A
CONCEPT DWG #: N/A

REV	REVISION DESCRIPTION	BY	CHKD	AUTH	DATE
0	FIRST ISSUE				12/05/2023

Eskom

Eskom Holdings SOC Ltd
Reg No 2002/015527/30

MOOKODI

132kV BUSBAR 1 BUS SECTION 2 WITH B/B VT's

©

Moo21P05-SE-D16	SHEET NUMBER 31	REVISION 0

SIZE GROOTTE A1L