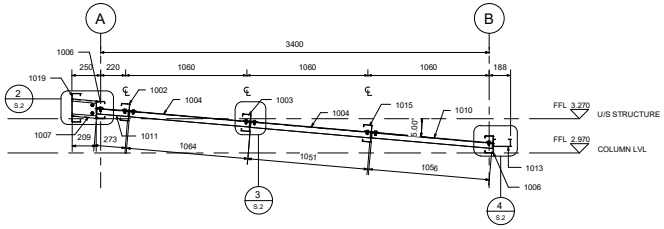

1 SAG BAR ELEVATION
1 : 20

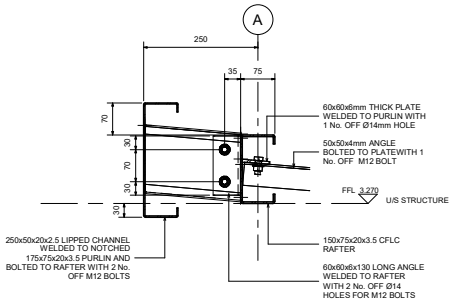

2 DETAIL A
1 : 5

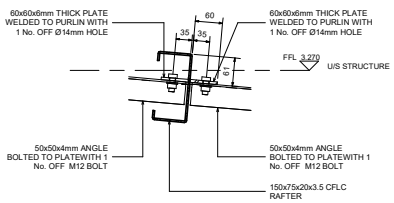

3 DETAIL B
1 : 5

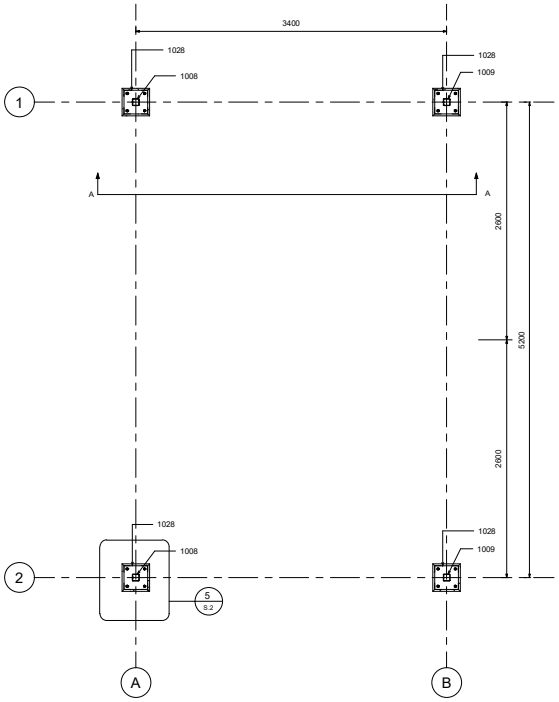

B SECTION B-B
1 : 25

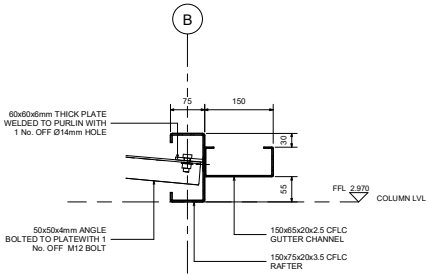

4 DETAIL C
1 : 5

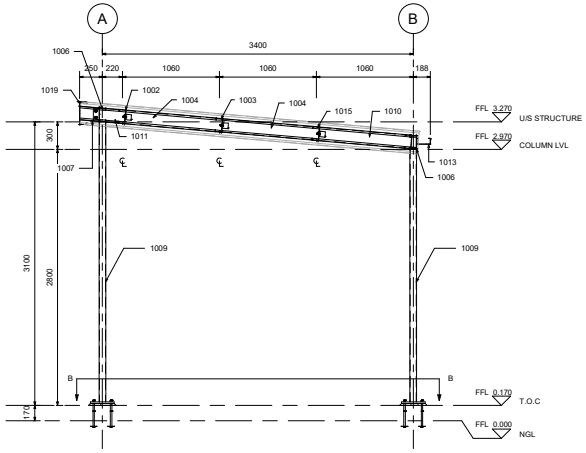

A SECTION A-A
1 : 25

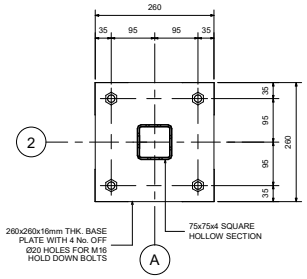

5 DETAIL D
1 : 5

REVISIONS					
REV	DATE	BY	DESCRIPTION	CHK	APD

NOTES

1. ABRASIVE BLAST CLEAN TO SA - 2 1/2 ALL STEELWORK. APPLY WITHIN 4 HOURS OF CLEANING APPROVED PRIMER AND PAINT

2. USE LINCOLN GREEN / ALOE FOR BOTH THE SHEETING AND STRUCTURAL STEEL AND NOT TRAFFIC GREEN.

COMPANY

IMC
ENGINEERING CREATIVES

DRAWN BY: E TERBLANCHE

SIGNATURE: ..... DATE: .....
DESIGN BY

SIGNATURE: ..... DATE: .....
CHECKED BY

SIGNATURE: ..... DATE: .....
PROJECT MANAGER:

AREA OF JURISDICTION: JOHANNESBURG

DESCRIPTION OF PROJECT: STANDBY GENERATOR

DRAWING TITLE:

GENERAL ARRANGEMENT OF
STEEL COVER DETAILS, PLANS,
SECTIONS, ELEVATIONS & DETAILS

CLIENT APPROVAL:
INITIALS AND SURNAME
SIGNATURE DATE
CONTRACT No. :

CHS APPROVAL:
INITIALS AND SURNAME
SIGNATURE DATE
PROJECT No. :
SCALE : AS SHOWN

PROJECT STATUS
CONCEPTUAL (ARRANGEMENT DRAWING) | ENGINEERING (DRAWING) | MANUFACTURING (DRAWING) | AS BUILT (DRAWING)

PROJECT ENGINEER:
INITIALS AND SURNAME | SIGNATURE & Pr Eng NUMBER | DATE:

COPYRIGHT RESERVED. NO USE NOR REPRODUCTION NOR DUPLICATION THEREOF MAY OCCUR WITHOUT THE WRITTEN CONSENT OF THE COMPANY (PTY)

REMARKS:

ORIGINAL PAPER SIZE: A1

DRAWING NO: R0 61270/200

SHEET NO. 1 OF 1

REVISION 0