CONCEPT DESIGN OF THE HARDENDED WATER STORAGE TANKS

Item	Qty	Description
1	1	WATER CONDITIONING ROOM WALLS
2	1	WALL FOUNDATION
3	1	INTERNAL FLOOR SLAB
4	1	ROOF
5	2	PUMP UPDTANDS
6	1	PERSONAL ACCESS
7	2	VENTILATION OPENING

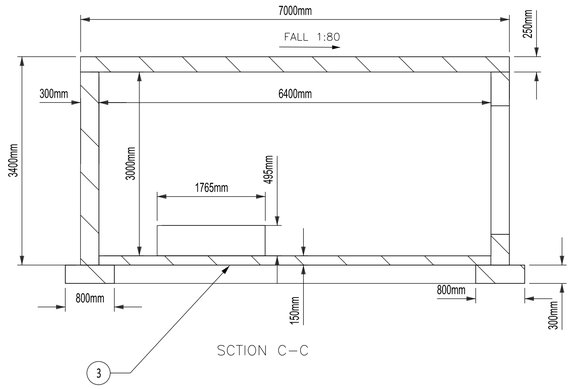

SCTION C–C

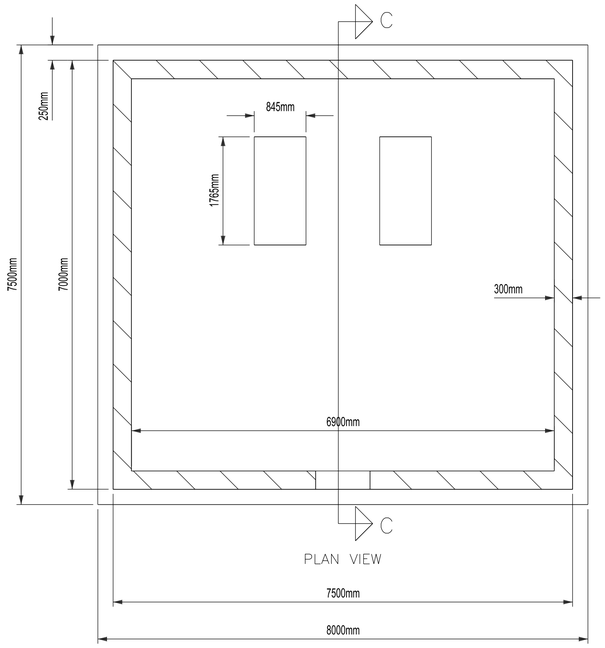

PLAN VIEW

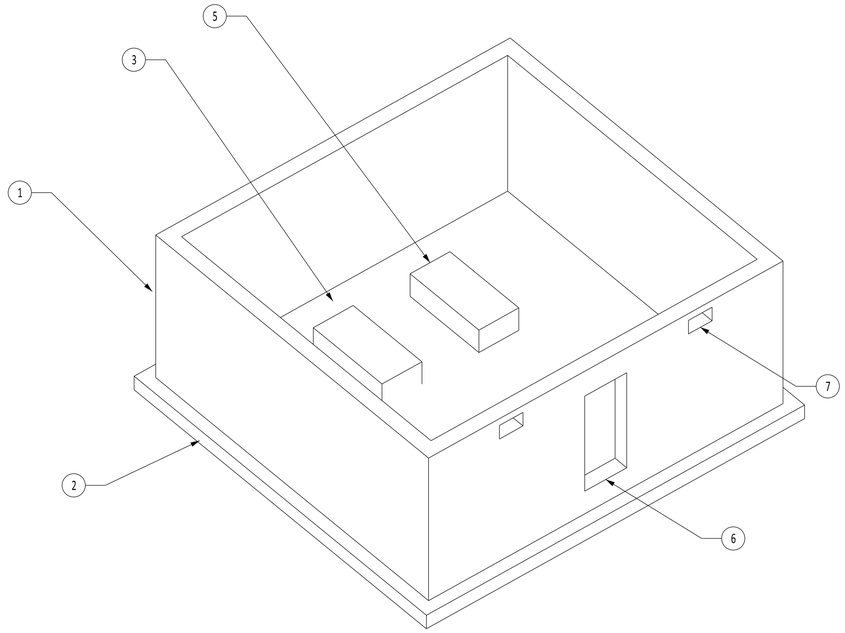

ISOMATRIC VIEW
NOTE : ROOF REMOVED FOR CLEARITY

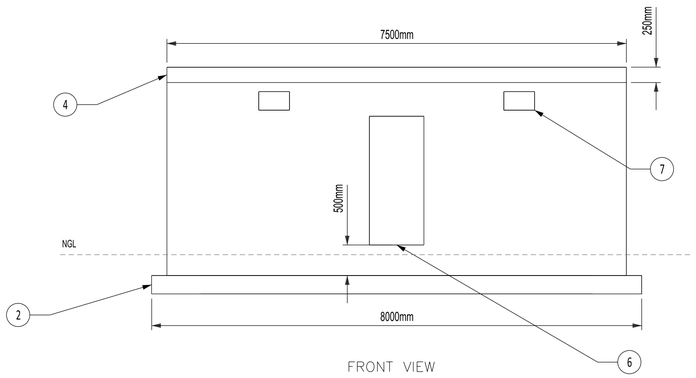

FRONT VIEW

NOTE:
1. WATER PROOFING TO BE APPLIED ON WATER CONDITIONING ROOM WALL COVER BY SOIL.
2. THE EXACT POSITION OF THE STUB COLUMN TO BE CONFIMED AT LATER STAGE.
3. LOUVRES TO BE PROVIDEDAT VENTILATION OPENINGS.
4. DPC SHEET TO BE PROVIDED UNDERNEATHE INTERNAL FLOOR SLAB.

D.O.	REV	DATE	•• REVISION •• / INDEX REFERENCE :	REV BY	CHKD BY	AUTH BY	REFERENCE DRAWINGS
31	--	.....		---	---	---	

ALLOCATION CENTRE 31.46

Eskom

KOEBERG NUCLEAR POWER STATION

CONTRACTOR

CONTRACTOR NO

MICRO 0914E011007-01

HARDENED WATER RESERVOIR (MOD 12008)
WATER CONDITIONING ROOM

CHKD

DWG ---

SCALE N.T.S.

APPROVED

DOC NO XX
KBA 12 XXX

SHEET 7 OF 8

REVISION 1

THIS DRAWING CONTAINS COPYRIGHT INFORMATION WHICH MAY NOT BE DISCLOSED WITHOUT WRITTEN CONSENT OF THE COPYRIGHT HOLDER

SIZE GROOTTE A1