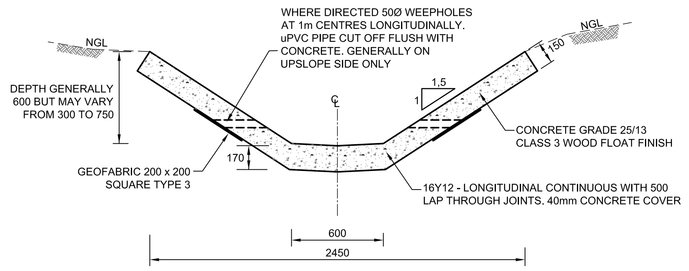

CONCRETE LINED TRAPEZOIDAL DETAIL

SCALE 1 : 20

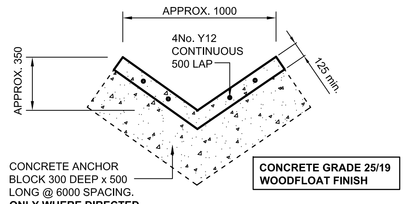

NOTE : DRAIN MAY BE CAST CONTINUOUSLY WITH SEALED CONSTRUCTION JOINTS AT THE TRANSITION BETWEEN EACH SECTION

CONCRETE VEE DRAIN DETAIL

SCALE 1 : 20

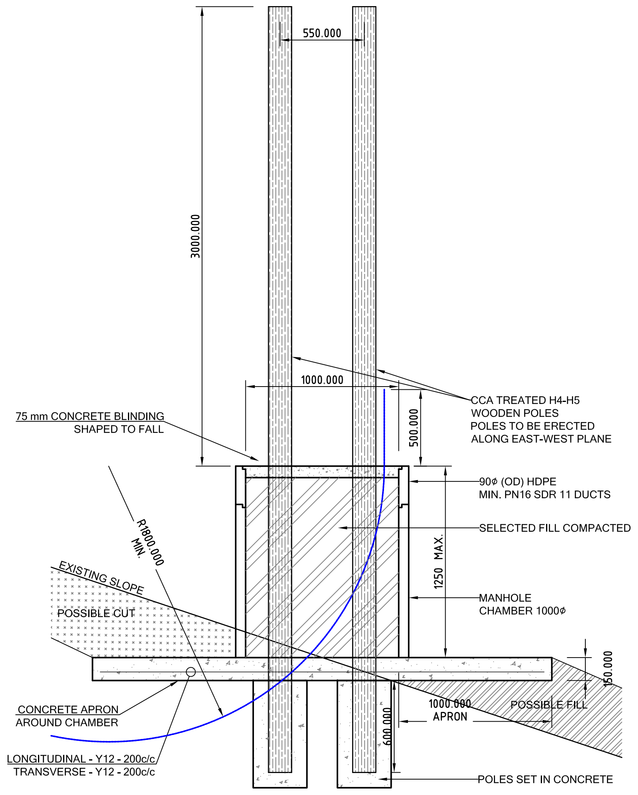

DETAIL : TEMPERATURE MONITORING CHAMBER

SCALE 1 : 20

NOTE: FIRST CHAMBER TO BE 1,5m LONG TO ALLOW FOR MAXIMUM SILT CAPACITY BEFORE CLEANING. CHAMBERS PROGRESSIVELY SMALLER AFTER THIS.

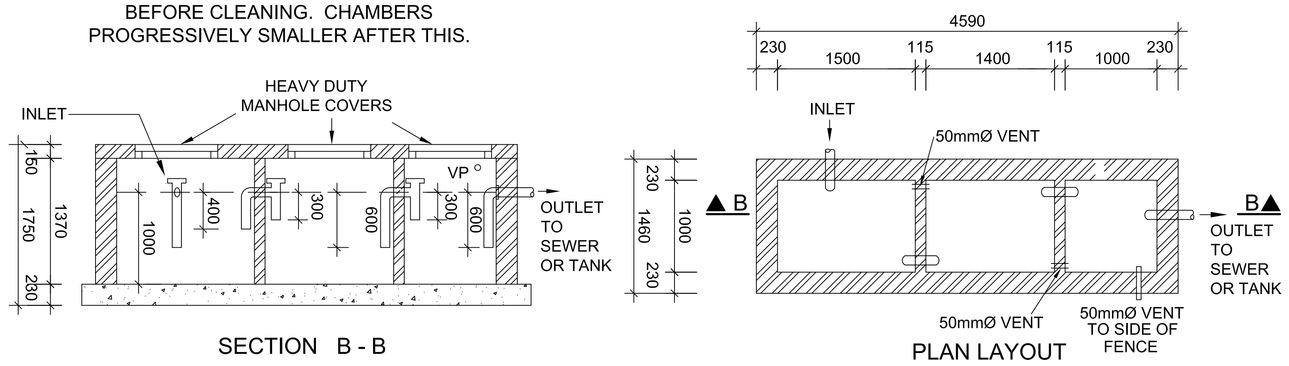

SECTION B - B

PLAN LAYOUT

WASHBAY SILT, OIL & GREASE TRAP

NOT TO SCALE

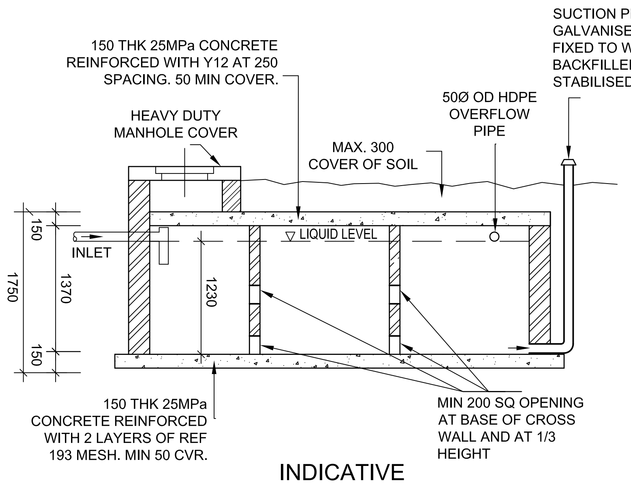

INDICATIVE SECTION B - B

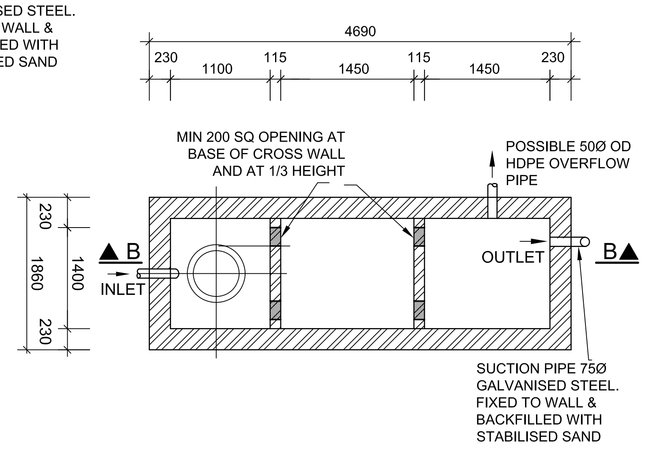

PLAN VIEW

NOTE: FIRST CHAMBER TO BE 1,5m LONG TO ALLOW FOR MAXIMUM SILT CAPACITY BEFORE CLEANING. CHAMBERS PROGRESSIVELY SMALLER AFTER THIS.

WASHBAY CONSERVANCY TANK

NOT TO SCALE

NOTE: THE INLET PIPE IS TO MATCH THE EXISTING PIPEWORK.

75Ø GALVANISED STEEL SUCTION PIPE IS TO BE FITTED WITH THE APPROPRIATE QUICK RELEASE COUPLING TO MATCH THE TANKER THAT WILL EMPTY THE TANK.

: BRICKWORK AS SPECIFIED BRICKS TO BE NON-FACING EXTRA (NFX-E28 OR EQUAL APPROVED, THOROUGHLY BURNT THROUGHOUT, FREE FROM FLAWS, STONES, CRACKS AND UNGROUND LUMPS) INCLUDING ALL CUTTING, WASTE, CORBELLING, OVER SAILING AND CAULKING OF PIPES INTO WALLS AND MORTAR. MORTAR SHALL BE ONE PART CEMENT TO 3 PARTS OF SAND

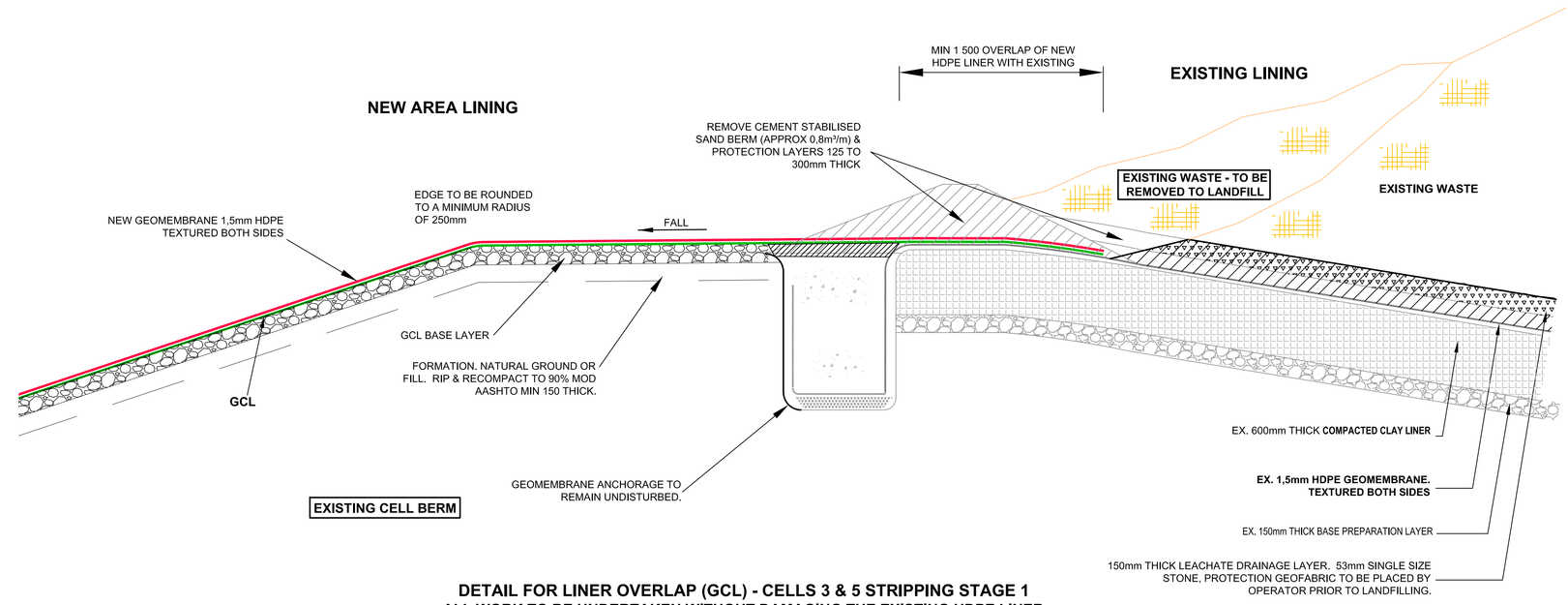

DETAIL FOR LINER OVERLAP (GCL) - CELLS 3 & 5 STRIPPING STAGE 1
ALL WORK TO BE UNDERTAKEN WITHOUT DAMAGING THE EXISTING HDPE LINER

SCALE 1 : 25

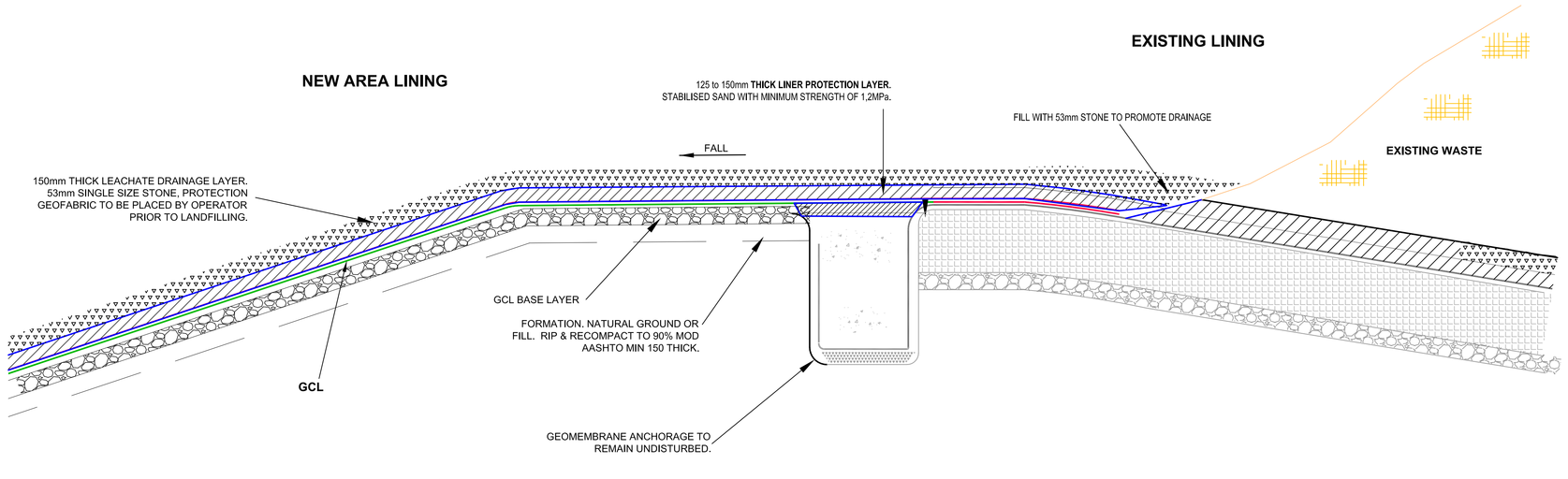

DETAIL FOR LINER OVERLAP (GCL) CELLS 3 & 5 - COMPLETION
ALL WORK TO BE UNDERTAKEN WITHOUT DAMAGING THE EXISTING HDPE LINER

SCALE 1 : 25

NOTE: MIN 125 STABILISED SAND COVER TO GEOMEMBRANE AT ALL TIMES

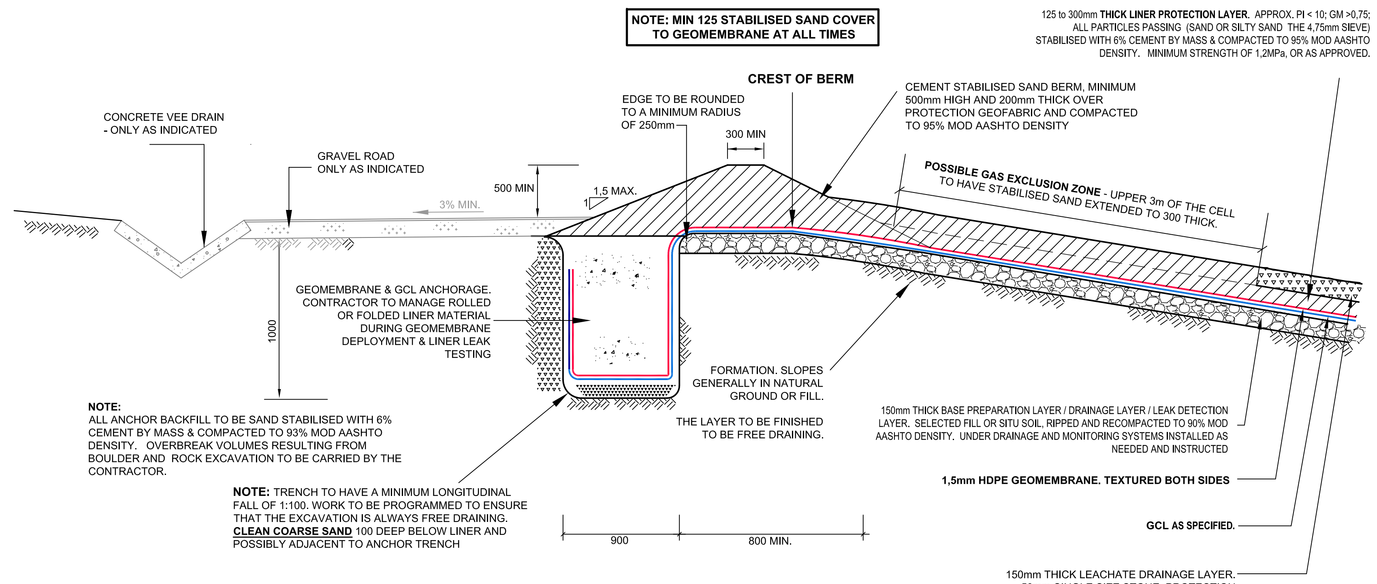

NOTE:
ALL ANCHOR BACKFILL TO BE SAND STABILISED WITH 6% CEMENT BY MASS & COMPACTED TO 93% MOD AASHTO DENSITY. OVERBREAK VOLUMES RESULTING FROM BOULDER AND ROCK EXCAVATION TO BE CARRIED BY THE CONTRACTOR.

NOTE: TRENCH TO HAVE A MINIMUM LONGITUDINAL FALL OF 1:100. WORK TO BE PROGRAMMED TO ENSURE THAT THE EXCAVATION IS ALWAYS FREE DRAINING. **CLEAN COARSE SAND** 100 DEEP BELOW LINER AND POSSIBLY ADJACENT TO ANCHOR TRENCH

DETAIL FOR GEOMEMBRANE ANCHORAGE (CCL)

SCALE 1 : 25

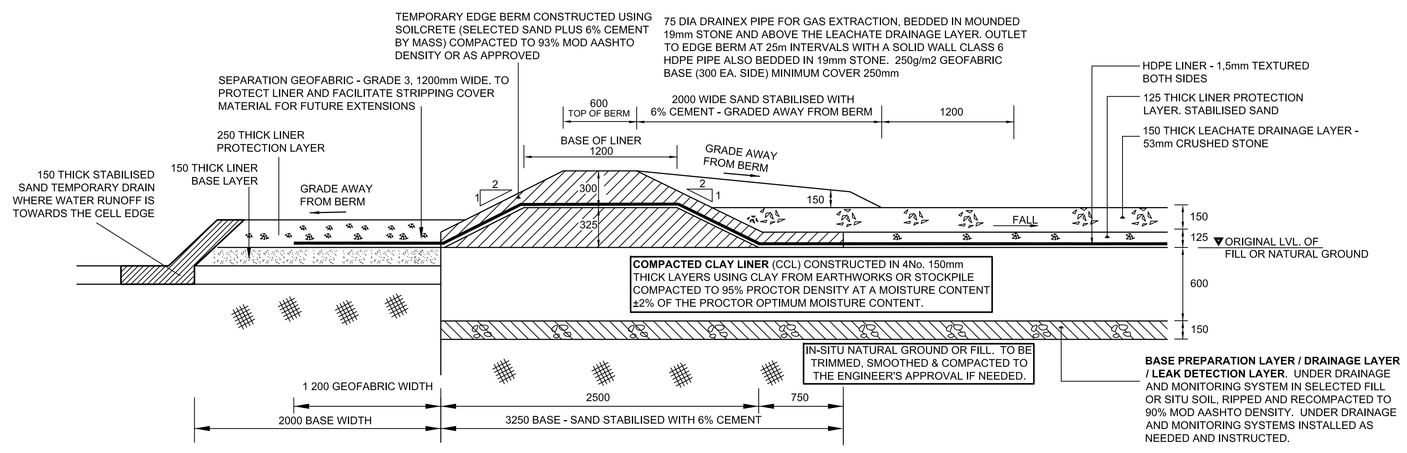

EDGE BERM DETAIL AT CELL BOUNDARIES WHERE A FUTURE OVERLAP IS PLANNED

SCALE 1 : 25

NOTES :

SAFETY WARNING: The Contractor will be working on the landfill so attention is drawn to the flammable, explosive and asphyxiative nature of landfill gas resulting from the de-composition of waste. Landfill gas can migrate through ground and the Contractor shall take all necessary precautions to ensure the safety of his/her personnel and all third parties from the dangers of landfill gas. Landfill gas is particularly dangerous in enclosed spaces (manholes etc.) The Contractor's personnel shall not enter the operational areas and contact with refuse and leachate should be kept to a minimum. No scavenging of refuse is allowed. Workmen are to be provided with the appropriate safety clothing and equipment.

The lighting of fires is strictly prohibited, due to the possible presence of landfill gas, and smoking on site will also be prohibited. The use of naked flames must only take place under safe conditions. Smoking shall only be allowed in designated safe areas.

The Contractor's attention is also drawn to the possible hazards to health of waste and contaminated water, and adequate health and safety precautions shall be taken.

The Contractor shall make all Sub-Contractors, visitors, third parties and agents aware of the hazards of landfill gas on the site, and shall ensure that they take the necessary precautions.

The Contractor shall take adequate Health and Safety precautions when working in and adjacent to waste. The wastes placed in the in-filled areas are reported to have been predominantly municipal wastes (domestic, commercial, industrial and inert). However, the Contractor should also make provision for the fact that any landfill may contain small quantities of hazardous substances other than those permitted under a site licence. No guarantee can be given that small quantities of other substances, including hazardous industrial waste, have not been concealed within other wastes and disposed without knowledge of the site operator.

THE EXTENT, LIMITS AND LOCATION OF THE WORKS SHOWN ARE APPROXIMATE ONLY AND MAY BE VARIED BY THE ENGINEER DEPENDENT UPON THE BUDGET AND CONDITIONS PREVAILING AT THE TIME OF CONSTRUCTION.

POSITION OF ALL THE CELL BOUNDARIES SHOWN IS TO BE VERIFIED & THE EXTENT OF THE WORKS CONFIRMED BY THE ENGINEER.

SURFACE & SUBSOIL DRAINAGE TO INTERCEPT FUTURE LEACHATE AND EXISTING GROUNDWATER FLOWS WILL BE POSITIONED AS REQUIRED DURING THE CONTRACT.

THERE ARE A NUMBER OF EXISTING LEACHATE PIPELINES WITHIN THE AREA OF THE WORKS AND THESE NEED TO BE LOCATED AND PROTECTED BEFORE ANY WORK IS STARTED.

ANY DAMAGE TO THE EXISTING LINER CAUSED BY THE CONTRACTOR IS TO BE REPAIRED TO THE ENGINEERS APPROVAL AT THE CONTRACTORS EXPENSE.

THE METHOD OF CONSTRUCTION IS TO BE SELECTED BY, AND REMAIN THE RESPONSIBILITY OF THE CONTRACTOR. DETAILS SHALL BE PROVIDED TO THE ENGINEER.

ALL HDPE PIPING IS TO BE **PE 100 SDR 17 PN 10** UNLESS OTHERWISE INDICATED.

THE EDGE OF THE EXISTING LINING NEEDS TO BE DETERMINED BY INVESTIGATION ON SITE WITHOUT DAMAGING IT. THE SETTING OUT POINTS ARE INDICATIVE ONLY.

LEVELS RELATED TO THE LINER REFER TO THE TOP OF THE PROTECTION LAYER UNLESS OTHERWISE STATED

CONTOURS DEPICT WASTE AS AT SEPTEMBER 2022 FOR THE LANDFILL SITE.

SCALE ON REDUCED DRAWING

100mm ON ORIGINAL DRAWING

DRAWING SCHEDULE

WS 7638 - 01 OVERALL PLAN SHOWING CELL 6 & ANCILLARY WORKS
WS 7638 - 02 PLAN & DETAILS CELL 6 EARTHWORKS & DRAINAGE
WS 7638 - 03 PLAN & DETAILS - NEW LEACHATE POND 3 EARTHWORKS & DRAINAGE
WS 7638 - 04 CELL 6 - LINING PLAN & DETAILS
WS 7638 - 05 NEW LEACHATE POND 3 : LINING PLAN & DETAILS
WS7638 - 06 NEW LEACHATE POND 3: DETAILED PLAN
WS 7638 - 07 CELL 6 & LEACHATE POND 3 : CONSTRUCTION DETAILS
WS 7638 - 08 CELL 6 & LEACHATE POND 3 : CONCRETE DETAILS
WS 7638 - 09 CELL 6 & LEACHATE POND 3 : PLAN AND DETAILS : CAPPING

REVISIONS

No.	DATE	REVISION DESCRIPTION
AC	MAY 2023	FOR TENDER PURPOSES
AB	APR 2023	FOR REGULATORY APPROVAL
AA	MAR 2023	FOR DISCUSSION

DESIGN ENGINEER / EMPLOYER'S AGENT:
WILSON & PASS Inc
email jon.pass@pixie.co.za
contact: +27 82 463 1127
PO Box 6060 Kirstinglon, Hillcrest 3625
Durban South Africa

EMPLOYER
eThekwini Municipality
CLEANSING & SOLID WASTE
DSW

MANAGER PLANT & DISPOSAL:

HEAD CLEANSING & SOLID WASTE:

PROJECT:
LOVU LANDFILL: CONSTRUCTION OF CELL 6 AND ANCILLARY WORKS

DRG. TITLE:
CELL 6 & LEACHATE POND 3 : CONSTRUCTION DETAILS

DRG PURPOSE:
FOR REGULATORY APPROVAL

DESIGN:
J PASS PrEng 890126 SIGN:
for Wilson & Pass Inc

DATE:

DESIGN:	ETHEKWINI CONTRACT No:
J.PASS PrEng	WS 7638
ORIGINAL SCALE: AS SHOWN	DATE: MARCH 2023
DWG.No.: WS 7638 - 07	REV.No.: AC