MATERIALS LIST			
ITEM	QTY.	DESCRIPTION	MATERIAL / REFERENCE
1	2	BRACKET 50x30x3 ANGLE -180LG.	SABS 1431 GR.300W (GALV.)
2	1	MOUNTING BOARD 120x320x3 THK	PAPER BASED PENOLIC RESIN
3	4	HEX BOLT M8x80 LG. C/W 4 HEX NUTS & 4 ROUND WASHERS	STAINLESS STEEL
4	8	HEX BOLT M8x50 LG.	BRASS
5	30	HEX NUT M8	BRASS
6	64	ROUND WASHER FOR M8 BOLT	BRASS
7	2	BUSSBAR 25x125x3 THK	BRASS
8	1	KNIFE SWITCH MOUNTING BOARD	PAPER BASED PENOLIC RESIN
9	1	BONDING LINK 25x83x3 THK	BRASS
10	1	KNIFE SWITCH	
11	2	CABLE LUG (VARIABLE SIZES FOR DIFFERENT CABLE SIZES)	TINNED COPPER
12	1	SAFETY COVER 160x360x10 THK	PERSPEX
13	4	HEX BOLT M8x50 LG(WITH Ø4x20 HOLE)	BRASS
14	1	VLD	
15	1	35mm DIN RAIL (50mm)	ALUMINIUM
16	2	DIN RAIL END STOP	PLASTIC

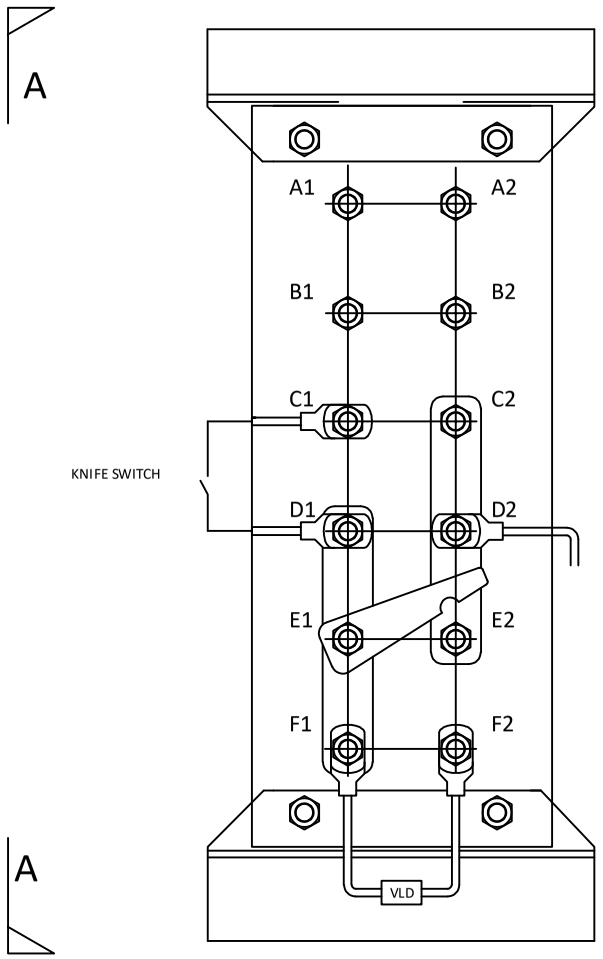

ASSEMBLY DETAIL

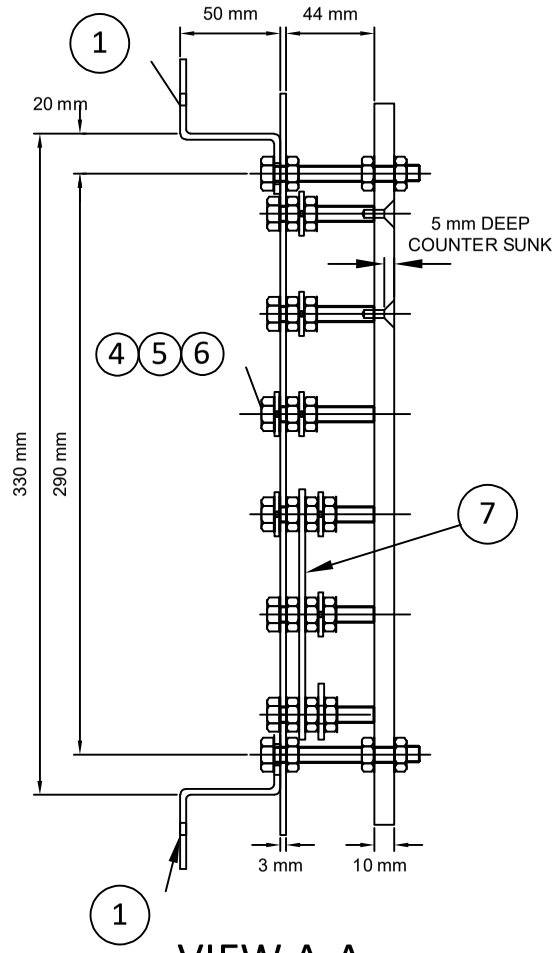

VIEW A-A

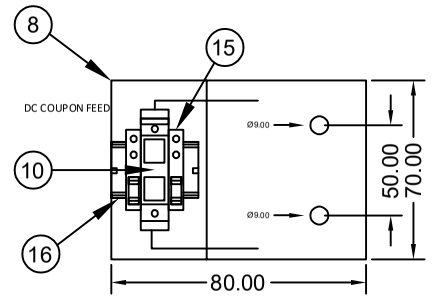

KNIFE SWITCH DETAIL

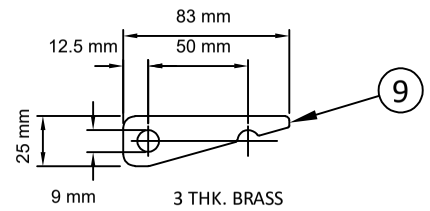

BONDING LINK DETAIL

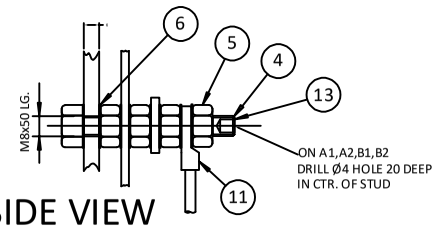

TYPICAL SIDE VIEW
SHOWING ASSEMBLY

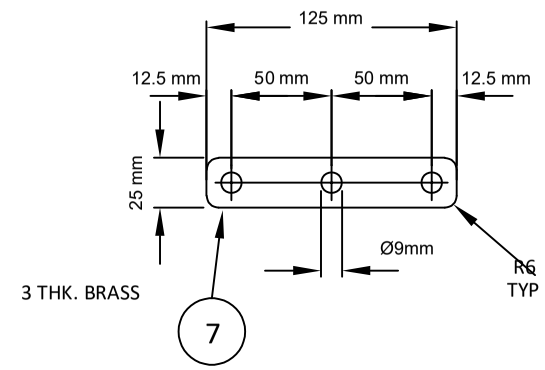

BUSSBAR DETAIL

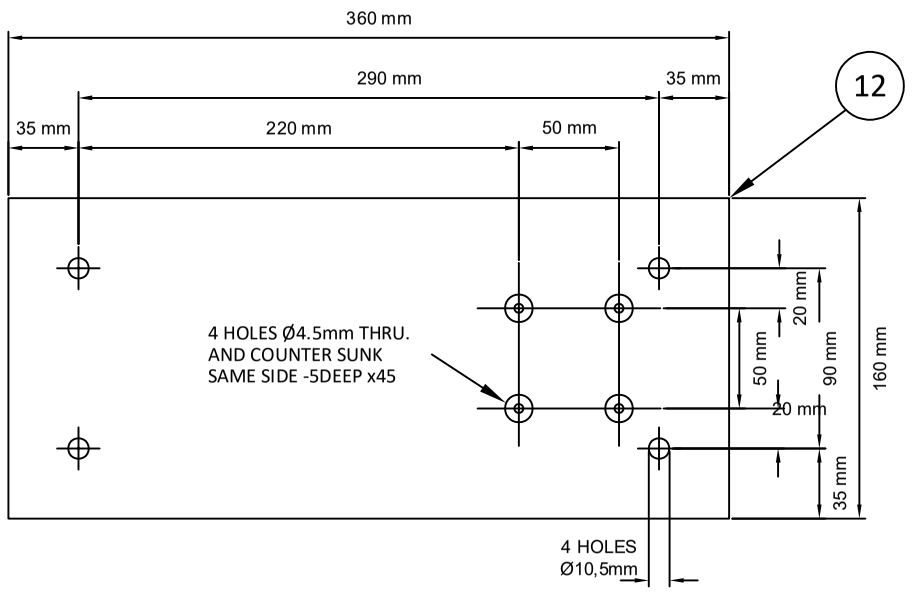

PERSPEX COVER DETAIL

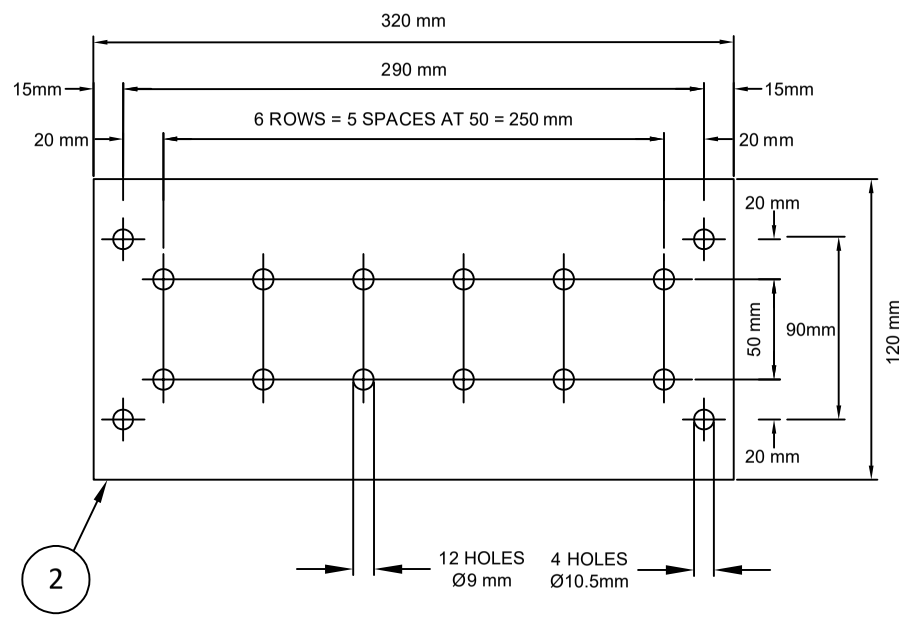

MOUNTING PLATE DETAIL

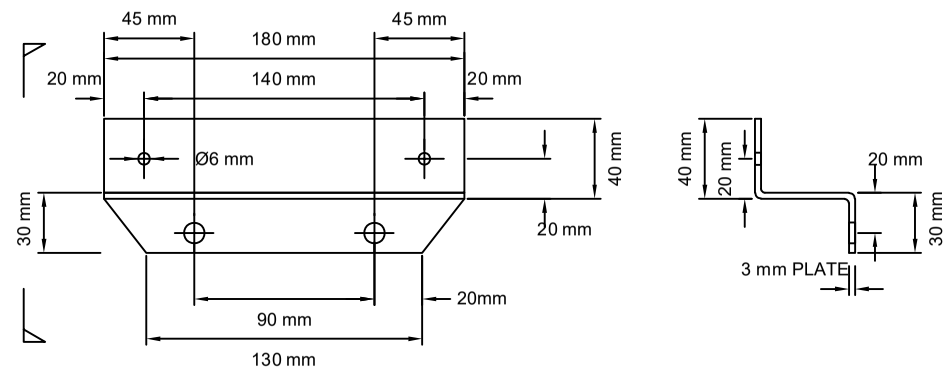

BRACKET DETAIL

PROJECT: MPP Optimisation	SCALE: N.T.S	CHECKED: D.Raath	APPROVED: D.Raath	
TITLE: Test Post Terminal Mounting Detail	CAD FILE:	DESIGN-DRAWN: S.Groeneveld	DATE: 04/07/2023	
	PROJECT No:	DRAWING No: CATH-DSN-DWG-001703	REV: 0	

Cathtect Cathodic Protection (Pty) Ltd.

REVISIONS

TRANSNET pipelines

TITLE
Comment

PROJECT NAME			
CHECKED			
APPROVED			
DATE	REF.	REF	
SCALE	N.T.S.		
DRAWING No.			REV
PL HO1340-DWG-002			

A3