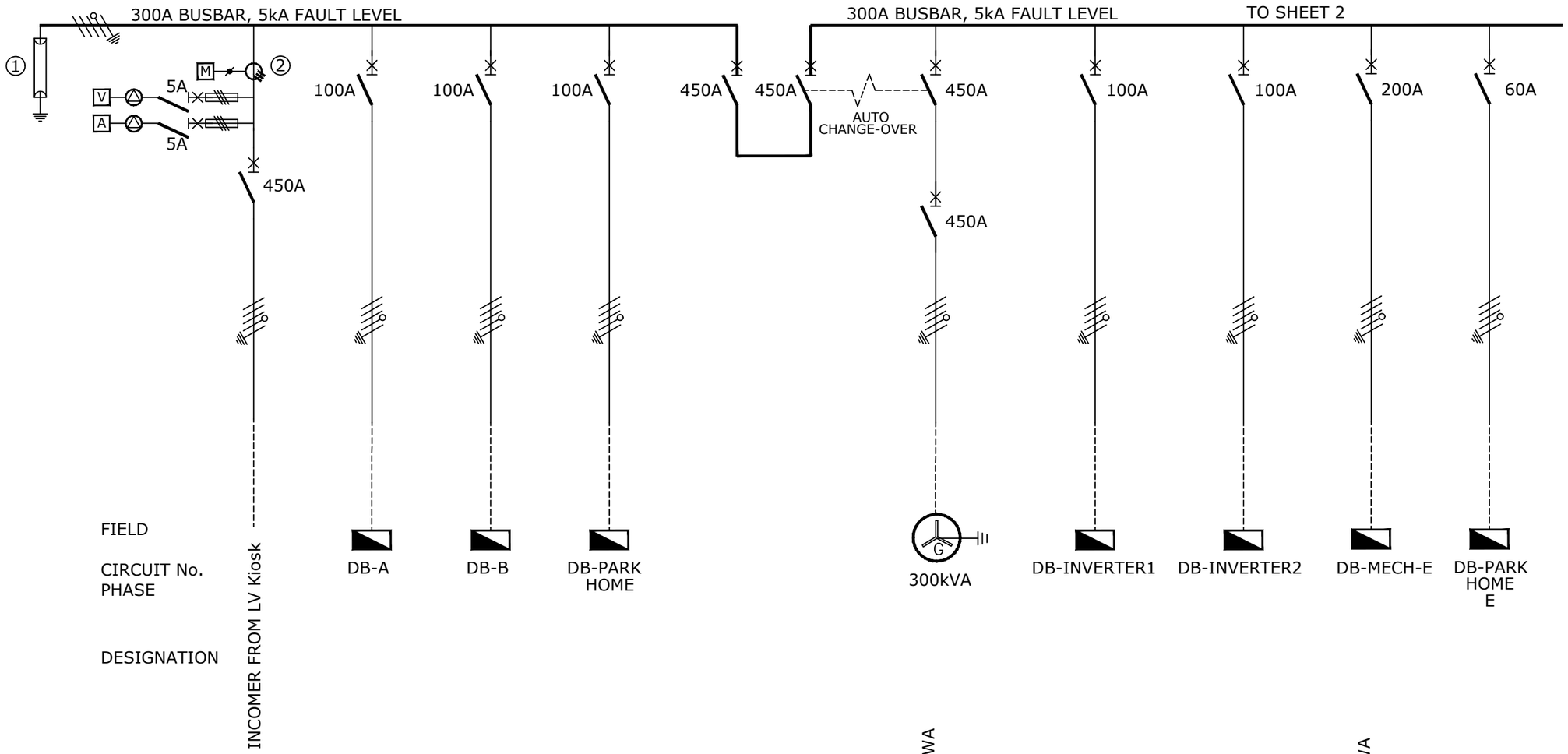

1 CLASS 1 SURGE ARRESTOR

2 SCHNEIDER PM 5320

NOTES

1) DROPPERS/TAILS TO BE RATED FOR FULL i^2t LET THROUGH.
2) HARNESSED WIRING TO BE DERATED.
3) TUFFNOL BRACES ARE NOT TO BE USED ABOVE 10kA.
4) COPPER BUSBARS TO BE CONTINUOUS RATED.
5) SUFFICIENT SPACE REQUIRED FOR SAFE ACCESS FOR REWIRING.
6) EARTH AND NEUTRAL BARS TO BE EASILY ACCESIBLE.
7) ALL CIRCUIT BREAKERS TO BE FITTED WITH TERMINAL SHIELD ON LIVE AND LOAD SIDES.
8) ENCLOSURE TO BE IP54.
9) PHASING RWB, TOP TO BOTTOM, LEFT TO RIGHT, BACK TO FRONT.
10) INTERNAL TEMP TO BE LIMITED TO 5° ABOVE AMBIANT, MAX 40°C.
11) ALL CIRCUITS TO BE LABELED.
12) 25% SPARE SPACE. SPARE SPACES ARE TO BE FITTED WITH COPPER BUSBAR TAILS CONNECTED TO DROPPER BUSBARS TO ALLOW INSTALLATIONOF CIRCUIT BREAKERS WITH A MINIMAL SHUTDOWN PERIOD.
13) DB TO BE FITTED WITH A4 LEGEND CARD HOLDER WITH STANDARD IBUYA A4 LEGEND CARD.
14) EACH CIRCUIT TO BE LABELED WITH DETAILED DESCRIPTION OF CONNECTED DEVICE.
15) EXTERNAL EARTH STUD MOUNTED ADJACENT CABLE ENTRY.

INCOMING CABLE	-TOP
OUTGOING CIRCUITS	-TOP
COLOUR	-ORANGE
MOUNTING	-FLOOR STANDING
ACCESS	-FRONT/REAR
PROTECTIVE DEVICES	-SCHNEIDER
ACB's (1250A-4000A)	-MASTERPACT NW
MCCB'S(800A - 1000A)	-COMPACT NS
MCCB'S(60A-630A)	-EASYPACT CSV
MCB's	-MULTI 9, TYPE 2
CONTACTORS	-AC3 HEAVY DUTY

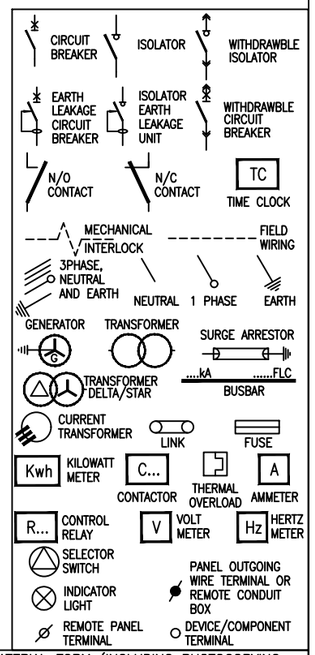

Approved in Principle
Justin McKelvie-King
Pr Eng : 20120548

NOT WITHSTANDING ANYTHING TO THE CONTRARY, ALL RIGHTS RESERVED. NO PART OF THIS DRAWING MAY BE REPRODUCED IN ANY MATERIAL FORM (INCLUDING PHOTOCOPYING OR STORING IN ANY MEDIUM OR BY ELECTRONIC MEANS WHETHER OR NOT TRANSIENTLY OR INCIDENTLY TO SOME OTHER USE OF THIS DRAWING) AND ALSO, THIS DRAWING MAY NOT BE USED FOR ANY PURPOSE OR REASON OTHER THAN FOR WHICH IT WAS ORIGINALLY ISSUED, WITHOUT THE WRITTEN PERMISSION OF IBUYA CONSULTING ENGINEERS.

REV	DESCRIPTION	BY	DATE	CHKD.
0	Original Issue	CW	30/10/24	MK

ENGINEER	DRAWN	DATE:	SCALE:	CHKD.
MK	CW	30/10/24	PAPER SIZE: A3	MK

PROJECT No.	DRAWING No.	SHEET:	REV.
32307	416	1 of 2	0

File Name : Lyr:

DRAWING TITLE: Makhaza Police Station Electrical Installation

DRAWING TITLE: Main LV Panel Single Line Diagram

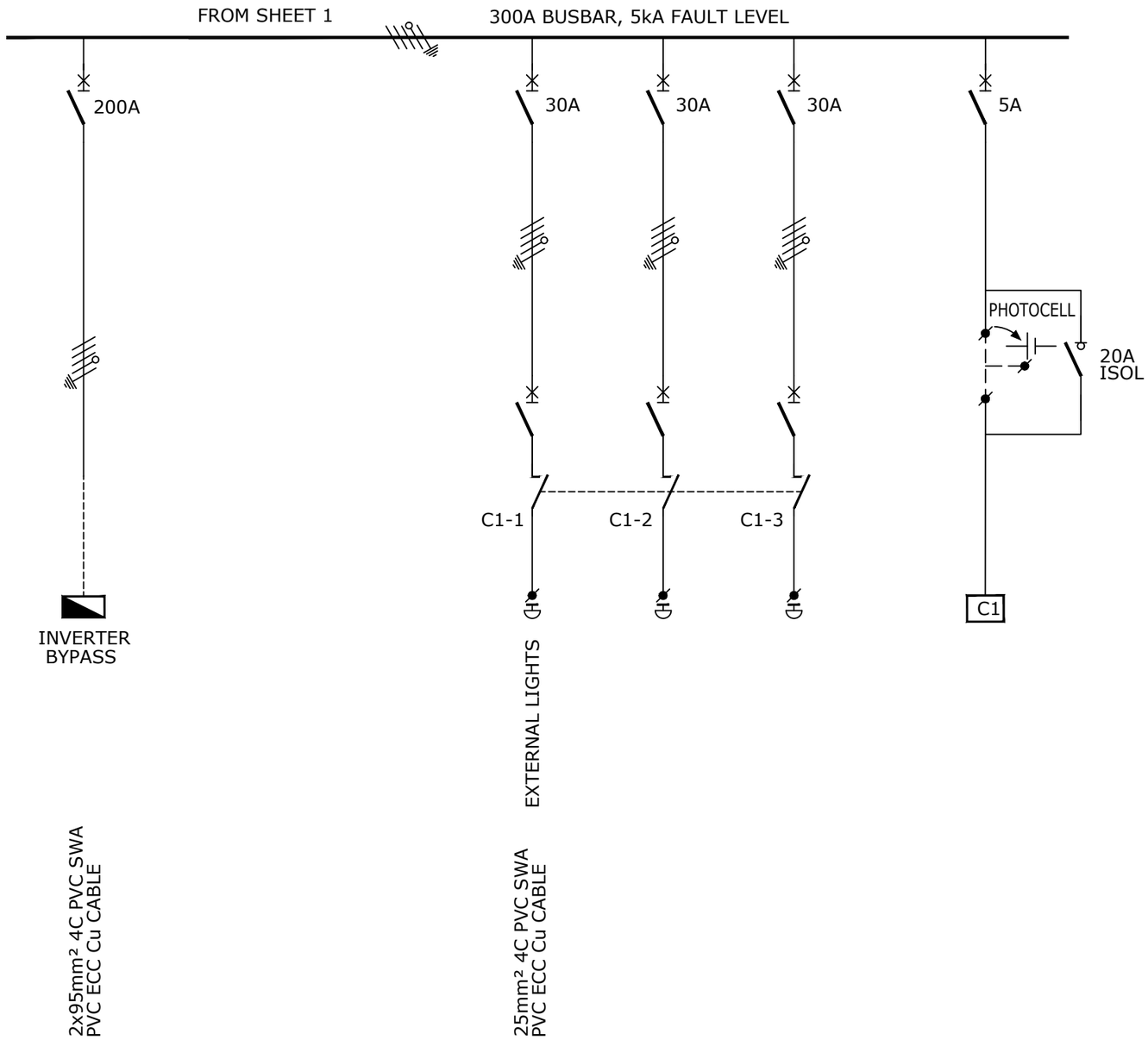

1 CLASS 1 SURGE ARRESTOR

2 SCHNEIDER PM 5320

NOTES

1) DROPPERS/TAILS TO BE RATED FOR FULL i^2t LET THROUGH.
2) HARNESSED WIRING TO BE DERATED.
3) TUFFNOL BRACES ARE NOT TO BE USED ABOVE 10kA.
4) COPPER BUSBARS TO BE CONTINUOUS RATED.
5) SUFFICIENT SPACE REQUIRED FOR SAFE ACCESS FOR REWIRING.
6) EARTH AND NEUTRAL BARS TO BE EASILY ACCESIBLE.
7) ALL CIRCUIT BREAKERS TO BE FITTED WITH TERMINAL SHIELD ON LIVE AND LOAD SIDES.
8) ENCLOSURE TO BE IP54.
9) PHASING RWB, TOP TO BOTTOM, LEFT TO RIGHT, BACK TO FRONT.
10) INTERNAL TEMP TO BE LIMITED TO 5° ABOVE AMBIANT, MAX 40°C.
11) ALL CIRCUITS TO BE LABELED.
12) 25% SPARE SPACE. SPARE SPACES ARE TO BE FITTED WITH COPPER BUSBAR TAILS CONNECTED TO DROPPER BUSBARS TO ALLOW INSTALLATIONOF CIRCUIT BREAKERS WITH A MINIMAL SHUTDOWN PERIOD.
13) DB TO BE FITTED WITH A4 LEGEND CARD HOLDER WITH STANDARD IBUYA A4 LEGEND CARD.
14) EACH CIRCUIT TO BE LABELED WITH DETAILED DESCRIPTION OF CONNECTED DEVICE.
15) EXTERNAL EARTH STUD MOUNTED ADJACENT CABLE ENTRY.

INCOMING CABLE	-TOP
OUTGOING CIRCUITS	-TOP
COLOUR	-ORANGE
MOUNTING	-FLOOR STANDING
ACCESS	-FRONT/REAR
PROTECTIVE DEVICES	-SCHNEIDER
ACB's (1250A-4000A)	-MASTERPACT NW
MCCB'S(800A - 1000A)	-COMPACT NS
MCCB'S(60A-630A)	-EASYPACT CSV
MCB's	-MULTI 9, TYPE 2
CONTACTORS	-AC3 HEAVY DUTY

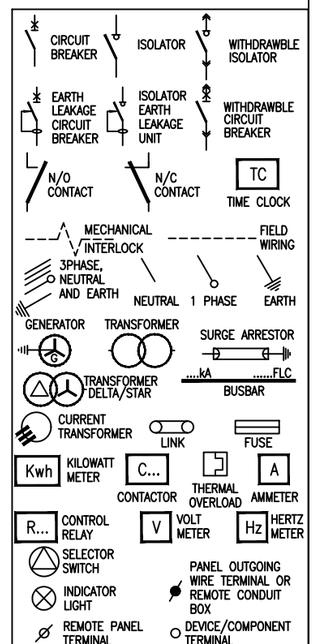

Approved in Principle
Justin McKelvie-King
Pr Eng : 20120548

NOT WITHSTANDING ANYTHING TO THE CONTRARY, ALL RIGHTS RESERVED. NO PART OF THIS DRAWING MAY BE REPRODUCED IN ANY MATERIAL FORM (INCLUDING PHOTOCOPYING OR STORING IN ANY MEDIUM OR BY ELECTRONIC MEANS WHETHER OR NOT TRANSIENTLY OR INCIDENTLY TO SOME OTHER USE OF THIS DRAWING) AND ALSO, THIS DRAWING MAY NOT BE USED FOR ANY PURPOSE OR REASON OTHER THAN FOR WHICH IT WAS ORIGINALLY ISSUED, WITHOUT THE WRITTEN PERMISSION OF IBUYA CONSULTING ENGINEERS.

REV	DESCRIPTION	BY	DATE	CHKD.
0	Original Issue	CW	30/10/24	MK

ENGINEER	DRAWN	DATE:	SCALE:	CHKD.
MK	CW	30/10/24	PAPER SIZE: A3	MK

PROJECT No.	DRAWING No.	SHEET:	REV.
32307	416	2 of 2	0

File Name : Lyr:

DRAWING TITLE: Makhaza Police Station
Electrical Installation

DRAWING TITLE: Main LV Panel
Single Line Diagram