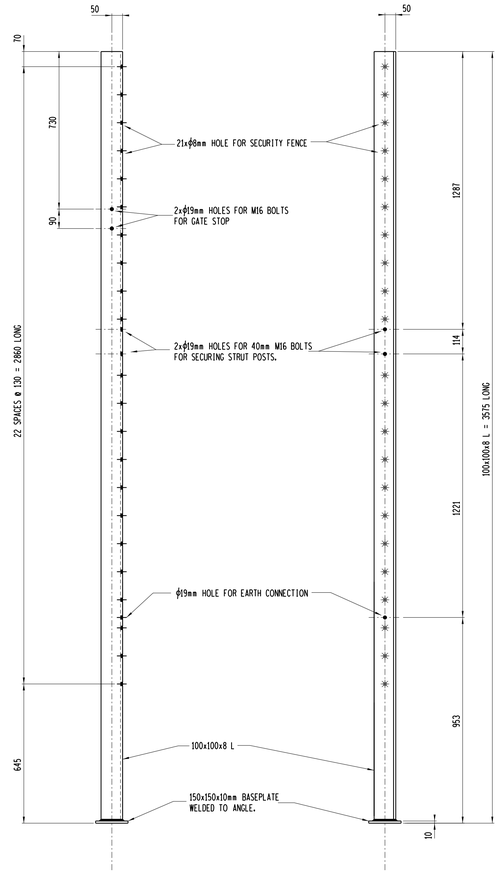

1-MAIN ANGLE REQ'D AS DRAWN C1
1:10

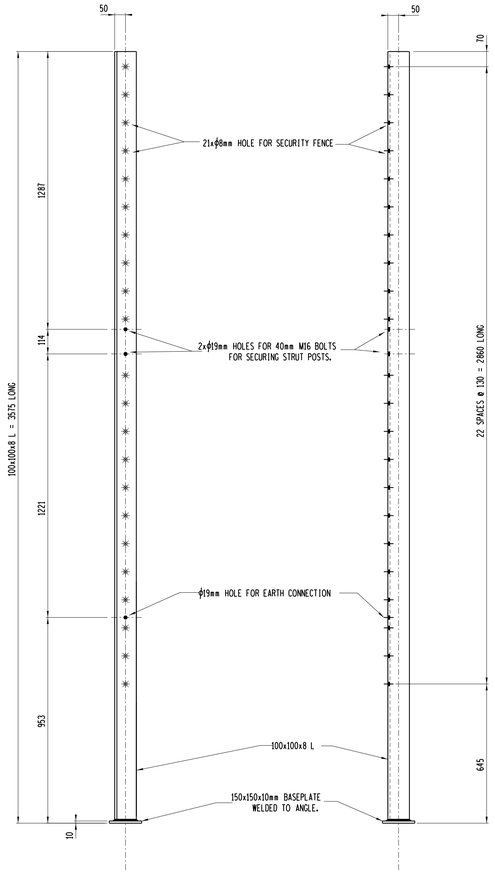

1-MAIN ANGLE REQ'D AS DRAWN C2
1:10

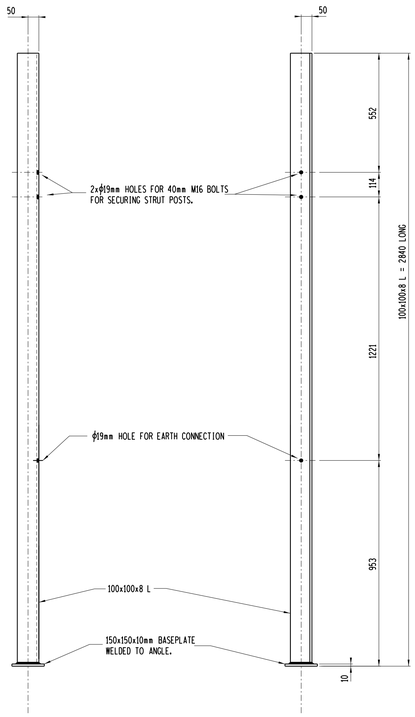

1-MAIN ANGLE REQ'D AS DRAWN C3
1:10

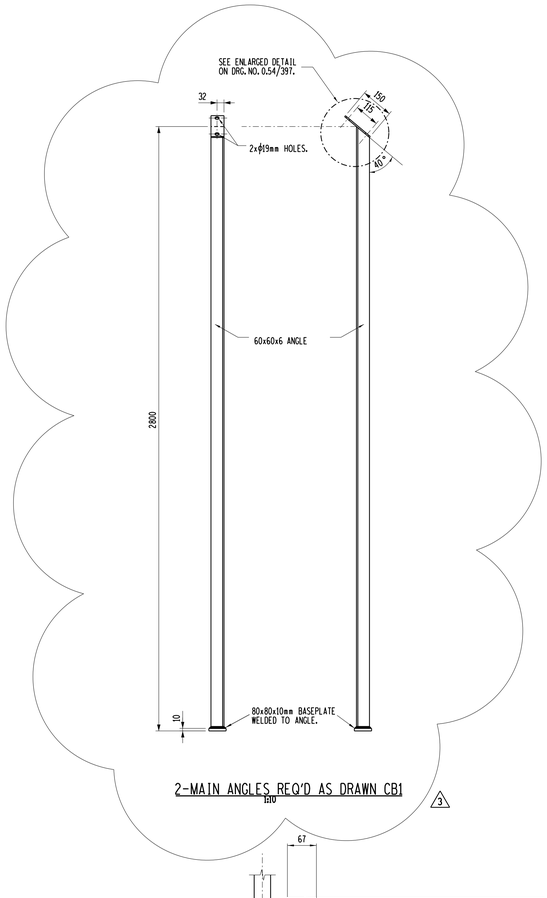

2-MAIN ANGLES REQ'D AS DRAWN CB1
1:10

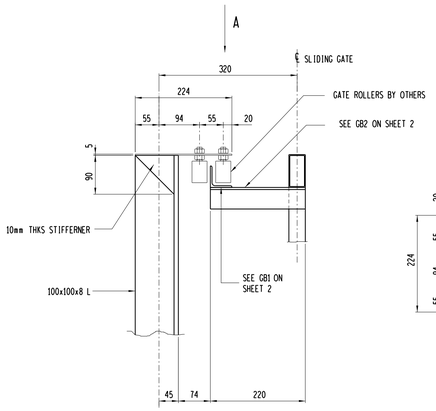

DETAIL 1
1:5

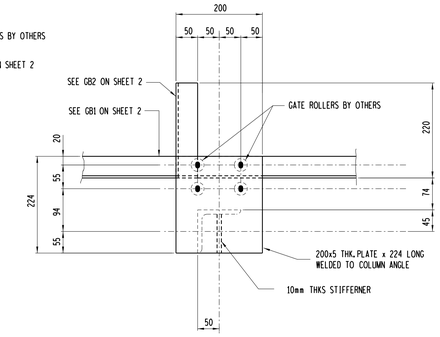

VIEW A
1:5

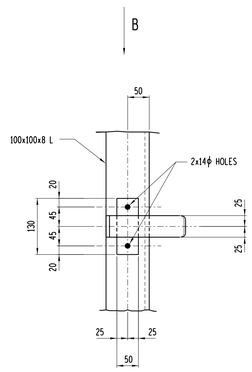

DETAIL 2
1:5

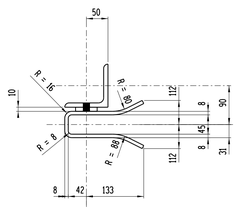

VIEW B
1:5

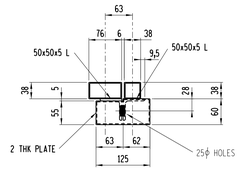

VIEW C
1:5

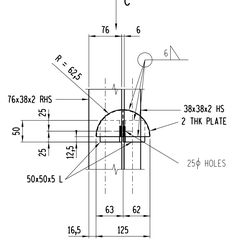

DETAIL 4
1:5

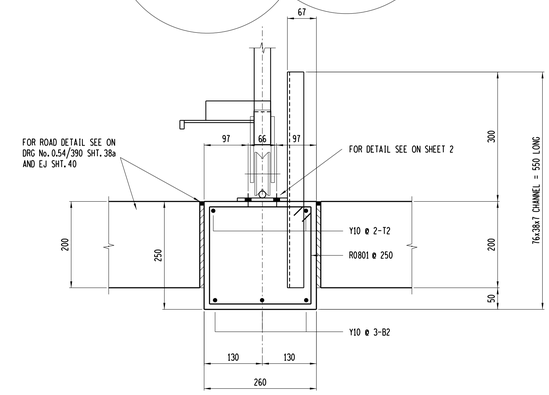

DETAIL 3
SUPPORT BASE FOR RAIL
1:10

NOTES

1. GATE AND CORNER POSTS TO BE 100x100x10 ANGLES BRACED WITH 60x60x6 ANGLES ALL OF WHICH MUST BE HOT DIP GALVANISED AFTER FABRICATION IN ACCORDANCE WITH SABS ISO 1461
2. PADLOCKS FOR GATES TO BE SUPPLIED BY ESKOM.
3. ALL BOLTS AND NUTS TO COMPLY WITH SABS 135.
4. REINFORCEMENT COVER TO BE 50mm

ITEM AND No OFF	Y or R	DIA.	MK.	No OFF PER ITEM	No OFF TOTAL	CUTTING LENGTH mm	TOTAL LENGTH m	SHAPE CODE	STANDARD SHAPES BENDING DIMENSIONS mm A	B	C	D	E	R
SEGMENT 1 1 N° OFF	R	08	01		22	850		60	150	160				
	Y	10	02		5	7100		20	7100					
	Y	10	03		5	7200		34	7070					

REV	REVISION DESCRIPTION	BY	CHKD	AUTH	DATE	REFERENCE DRAWINGS
3	MA CB1 DETAIL ADDED	PHD	DJC.S	DJC.S	21/12/12	
2	DETAIL 4 REVISED	PHD	DJC.S	DJC.S	05/3/12	
1	DETAIL 4 ADDED	PHD	DBN	DBN	21/12/11	

APPROVED BY DJC. SENEKAL
DATE 06/09/2011
CHECKED BY DJC. S
DATE 06/09/2011
DRAWN BY PAUL DOYLE
DATE 18/07/2011
SCALE

Eskom Transmission

ESKOM HOLDINGS LIMITED
REG NO. 2002/015527/06

SECURITY FENCE
7,8m NON-LETHAL SLIDING GATE - MIDDLE
STEELWORK DETAILS

©

0.54/7470

SHEET NUMBER 7
REVISION 3

A0L