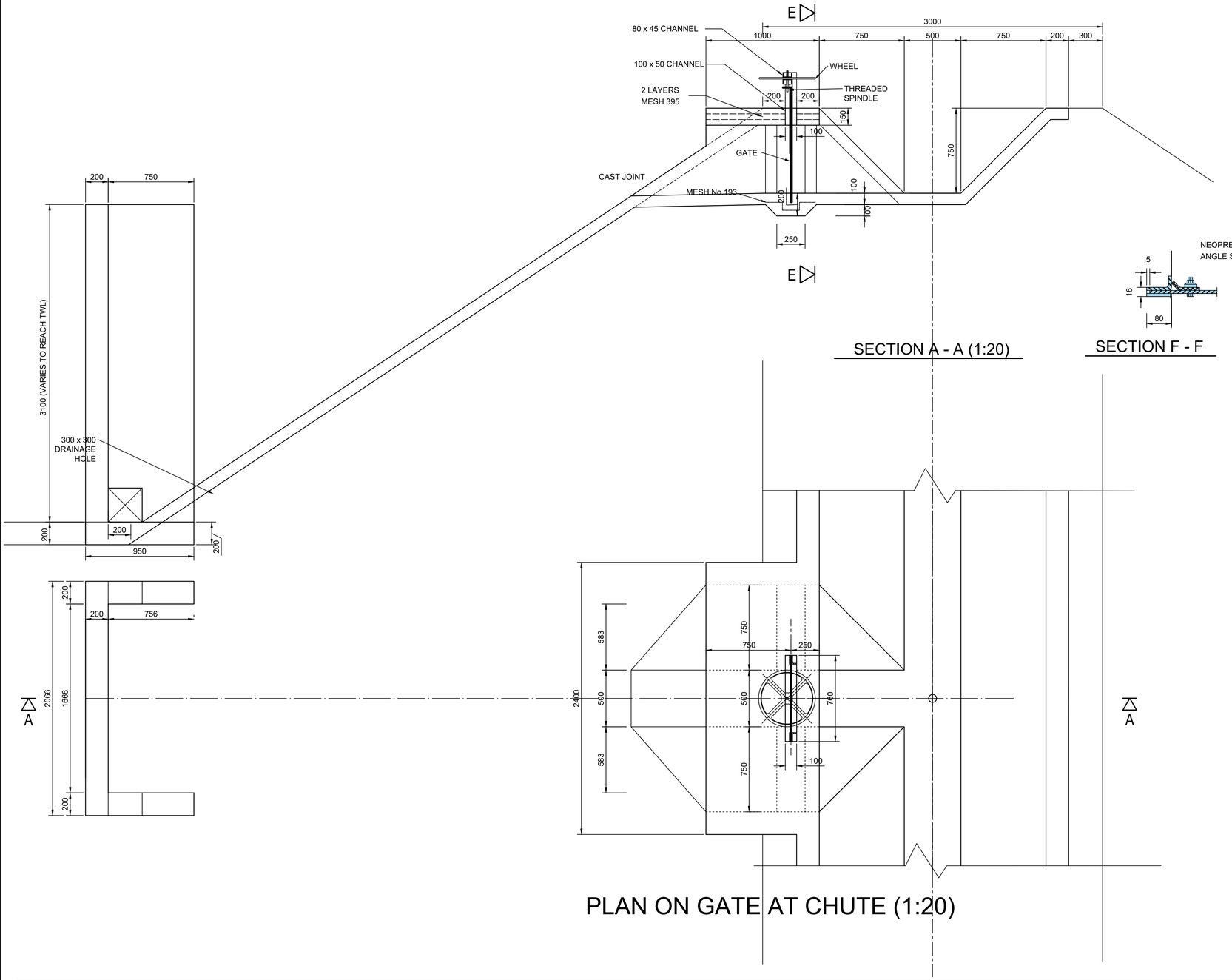

SECTION A - A (1:20)

SECTION F - F

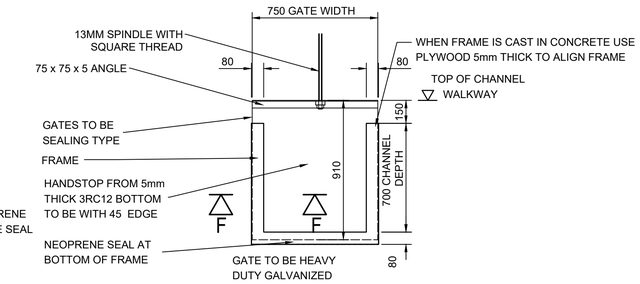

TYPICAL ELEVATION OF HANDSTOP (1:20)
FOR 700mm DEEP CHANNEL

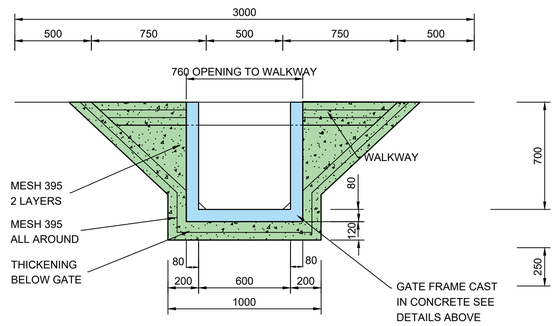

SECTION E - E (1:20)

(SUPPLIER DETAILED PLAN TO BE SUBMITTED FOR APPROVAL)

PLAN ON GATE AT CHUTE (1:20)

REV 1	DATE	CHK	APP	DESCRIPTION

CLIENT

F:\080517\Tender Drawings\Lepelle New Logo.jpg

MUTEO CONSULTING

39 GROBLER STREET
POLOKWANE 0699
P.O. BOX 6196
POLOKWANE NORTH
0750
TEL : (015) 291 4065
FAX : (015) 291 4043
website: www.muteo.co.za

PROJECT APPR	DATE	BY	SIGNATURE
DESIGNED		K. NKWADA Pr-Eng.	
CHECKED		H. MAKWARELA Pr-Eng.	
DRAWN		K. WOOLLEY	
PROJECT MNG.		N. CHUMA Pr-Tech.	
APPROVED		H. MAKWARELA Pr-Eng.	
CLIENT			

SCALE: DO NOT SCALE IF IN DOUBT ASK.

ALL DIMENSION IN mm UNLESS SPECIFIED OTHERWISE

TITLE: CONSTRUCTION OF SLUDGE LAGOON, PUMPSTATION AND PIPELINE
TYPICAL DETAILS OF GATES & DOWN CHUTES

PROJECT No. | DRG SIZE A0 | DRAWING No. MC/LNW-XX/12-11