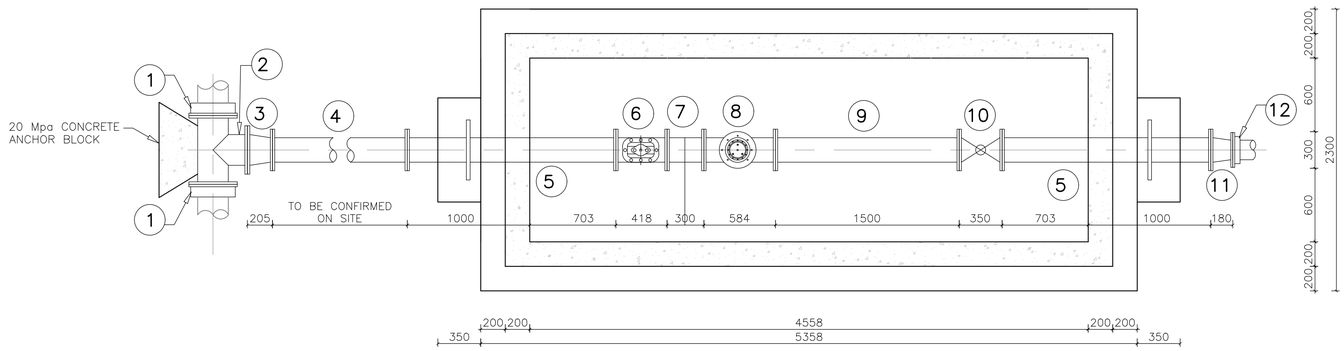

FLOOR PLAN
SCALE 1:25

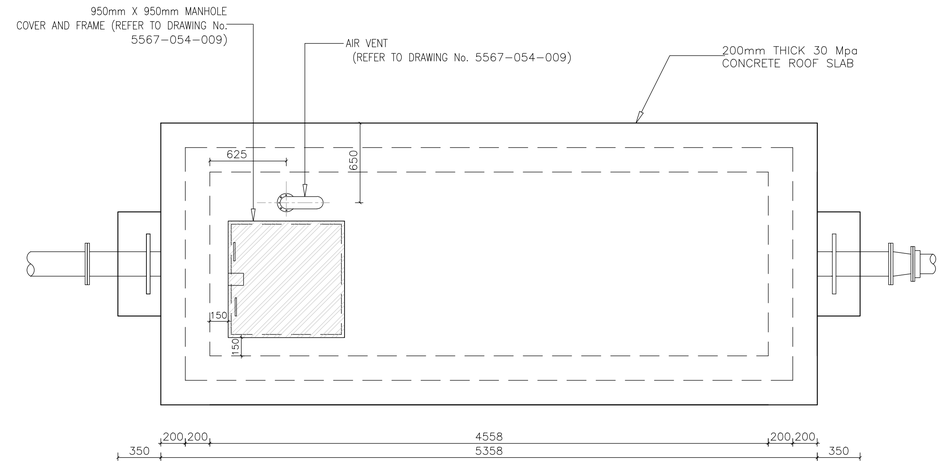

ROOF PLAN
SCALE 1:25

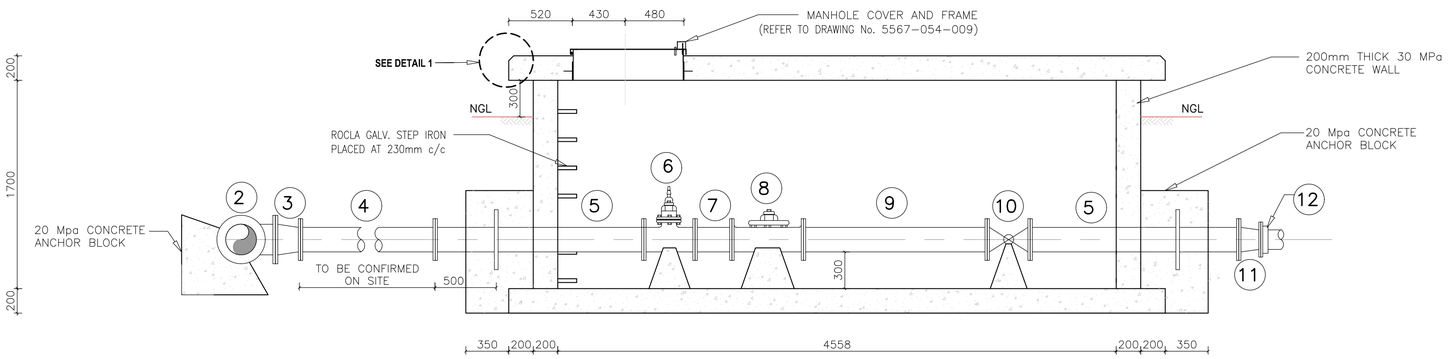

SECTION A–A
SCALE 1:25

ITEM NO	DESCRIPTION	DN (mm)	DIMENSIONS A	DIMENSIONS B	END CONNECTION	QTY
1	DEDICATED FLANGE ADAPTOR	250				2
2	TEE PIECE	250	560		FLANGED BOTH ENDS	1
3	REDUCER	250–200	205		FLANGED BOTH ENDS	1
4	STEEL PIPE	200	T.B.C		FLANGED BOTH ENDS	1
5	STEEL PUDDLE PIPE	200	1703		FLANGED BOTH ENDS	2
6	AVK GATE VALVE	200	418		FLANGED BOTH ENDS	1
7	STEEL PIPE	200	300		FLANGED BOTH ENDS	1
8	AVK BAKER CONTROL VAVE	200	584		FLANGED BOTH ENDS	1
9	STEEL PIPE	200	1500		FLANGED BOTH ENDS	1
10	SENSUS WP DYNAMIC TURBINE WATER METER	200	350		FLANGED BOTH ENDS	1
11	REDUCER	200–160	180		FLANGED BOTH ENDS	1
12	DEDICATED FLANGE ADAPTOR	160				1

FITTING DETAILS
SCALE 1:25

NOTE:
PIPE CLASS TO BE PN16
FBE COATED AND LINED

NOTES AND SPECIFICAONS:

1. ALL MATERIAL AND WORKMANSHIP SHALL COMPLY TO THE REQUIREMENTS OF THE LATEST RELEVANT SANS REQUIREMENT.
2. ALL DIMENSIONS ARE IN MILLIMETERS (UNLESS OTHERWISE SPECIFIED).
3. DON'T SCALE FROM THESE DRAWINGS.
4. ANY DISCREPANCIES AMBIGUITIES TO BE REPORTED TO ENGINEERS IMMEDIATELY
5. LEVELS AND DIMENSIONS TO BE CHECKED PRIOR TO ANY WORK COMMENCES.
6. FINAL POSITION OF SERVICES TO BE VERIFIED ON SITE.

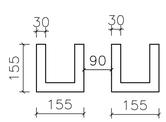

DETAIL 2
GALV. STEP IRONS PLAN
SCALE 1:10

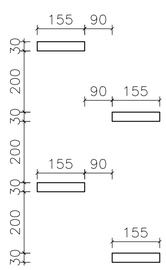

DETAIL 3
GALV. STEP IRONS FRONT VIEW
SCALE 1:10

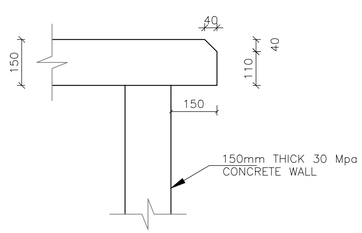

DETAIL 1
CHAMFER
SCALE 1:10

FOR TENDER

DRAWING CHECKED:	J. STEYN
DRAWN BY:	A. PIETERSE
DESIGN CHECKED:	J. STEYN
DESIGNED BY:	L. MATJUDA

CEENEX (PTY) LTD
291 SPRITE AVENUE
MENLYN WOODS OFFICE PARK
FAERIE GLEN,
PRETORIA(RSA)
TEL: +27 (0)12 3614373
FAX: +27 (0)12 3614371

REV. No.	AMENDMENTS	DRAWN	APPROVED	DATE
T1	ISSUED FOR TENDER	A.PIETERSE	J.STEYN	30/06/2023

CLIENT:

THEMBISILE HANI LOCAL MUNICIPALITY
PRIVATE BAG X4041
EMPUMALANGA
0458
TEL: 013 986 9100
FAX: 013 986 0995

PROJECT:

UPGRADING OF SHELDON WATER INFRASTRUCTURE – WARD 14 (MULTI–YEAR PROJECT)
THLM/SCM 17/2020–2021/W3/P1

DRAWING DESCRIPTION: FLOW CONTROL VALVE CHAMBER SECTIONS AND DETAILS

SCALE:	REVISION:
AS SHOWN	T1

DRAWING No.:
5567–14–054–005