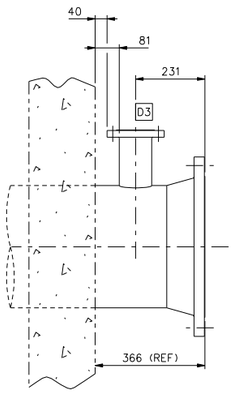

VIEW ON ARROW B
SHOWING NOZZLE D1 ONLY

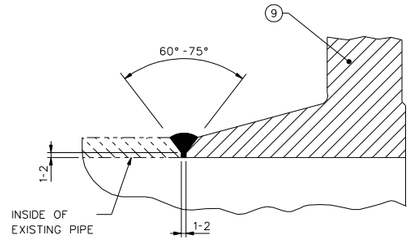

ENLARGED WELD DETAIL
ITEM 9 TO EXISTING PIPE
(API5L GR B)

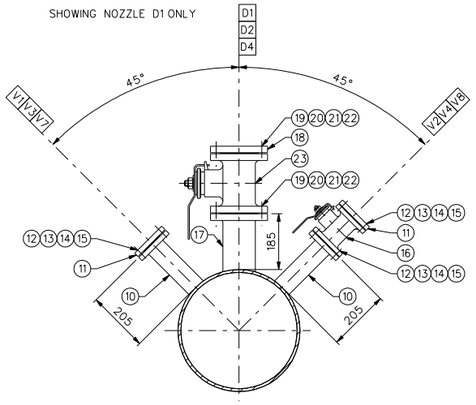

SECTION A
VALVE NOT INSTALLED ON V2

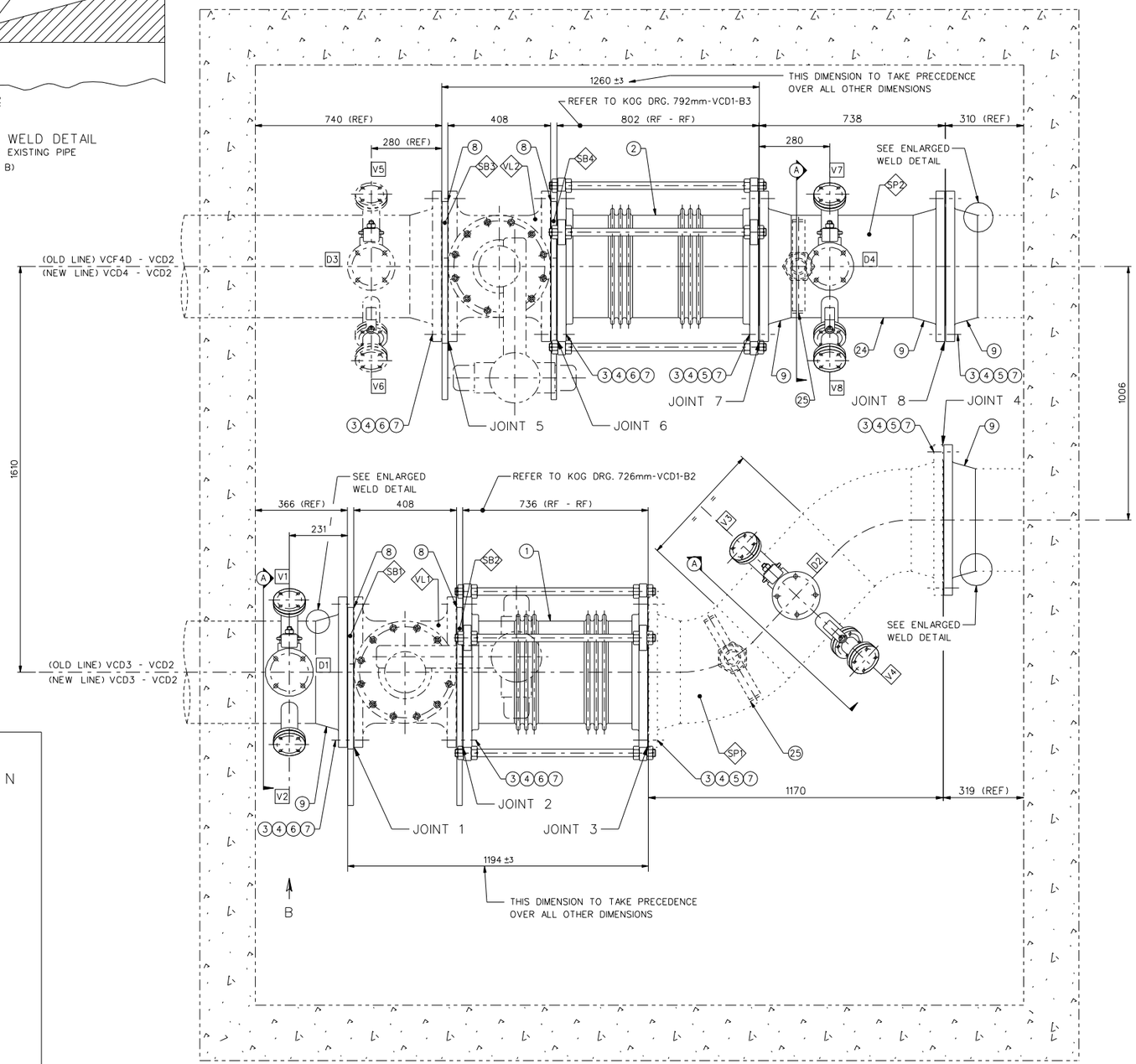

PLAN VIEW

THE VALVE CHAMBER NUMBER INDICATED ON
THE VALVE CHAMBER ON SITE AT
TIME OF PRODUCING THIS DRAWING WAS VCD1

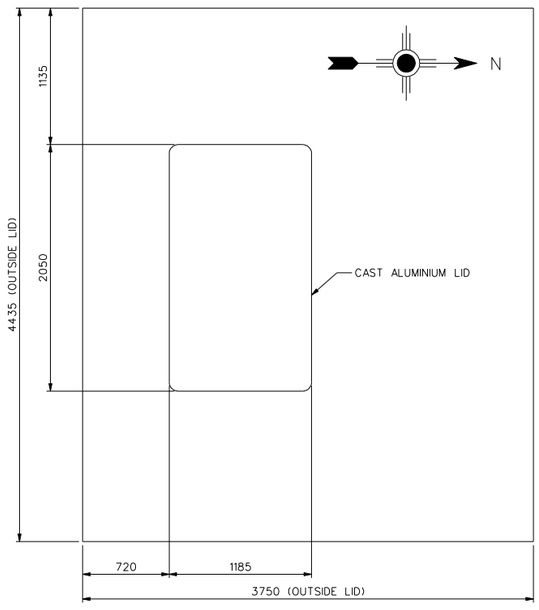

POSITION OF ACCESS MANHOLE
SCALE 1:25

NOZZLE SCHEDULE

MARK	NPS	CLASS	FACING	SERVICE	ORIENTATION
D1	3	150	LWN RF	DRAIN	TOP
D2	3	150	LWN RF	DRAIN	TOP
D3	3	150	LWN RF	DRAIN	TOP
D4	3	150	LWN RF	DRAIN	TOP
V1	1½	150	LWN RF	VENT	45° FROM VERTICAL TOP
V2	1½	150	LWN RF	VENT	45° FROM VERTICAL TOP
V3	1½	150	LWN RF	VENT	45° FROM VERTICAL TOP
V4	1½	150	LWN RF	VENT	45° FROM VERTICAL TOP
V5	1½	150	LWN RF	VENT	45° FROM VERTICAL TOP
V6	1½	150	LWN RF	VENT	45° FROM VERTICAL TOP
V7	1½	150	LWN RF	VENT	45° FROM VERTICAL TOP
V8	1½	150	LWN RF	VENT	45° FROM VERTICAL TOP

NOTES

1. ALL DIMENSIONS GIVEN FROM FLANGE RF.
2. VALVE & ACTUATORS ARE NOT DRAWN IN DETAIL.
3. MANHOLE 457 I/D.
4. EXISTING EQUIPMENT IS DRAWN IN DASHED LINES.
5. BELLOWS WILL BE STRETCHED INITIALLY APPROXIMATELY 10mm FOR FITMENT.
6. PARTS LIST BELOW ONLY SHOW MODIFIED ITEMS, ALL THE BOLTS, NUTS & GASKETS IN CHAMBER ALSO NEED TO BE REPLACED.
7. MATERIAL CERTIFICATION TO EN 10204 3.1 IS REQUIRED FOR ITEMS 9, 10, 17 & 24.
8. MATERIAL CERTIFICATION TO EN 10204 2.2 FOR BOLTING MATERIAL.
9. DESIGN DATA IS ONLY APPLICABLE TO MODIFICATIONS (INSTALLATION OF BELLOWS & ITEM 9 & SPOOL PIECE VCD4 - VCD2) INSIDE CHAMBER.
10. ENSURE PROPER WASHER FITMENT ON VALVES DURING BOLT-UP.
11. PIPE SUPPORT (ITEM 25) TO BE FIXED TO FLOOR (PERMANENTLY).
12. LOCALIZED HYDRO TEST TO BE CONDUCTED ON MODIFICATION WELD (ITEM 9 & NOZZLE WELDS) AT A PRESSURE OF 2925 kPa, USING A MECHANICAL HYDRO TEST PLUG FOR FOUR (4) HOURS AND A BALLOON TO BE USED WITH TEST PLUG.
13. TIGHTNESS PRESSURE TEST TO BE DONE FOR ONE (1) HOUR ON PIPE LINE.
14. PAINTING ACCORDING TO ACSA SPECIFICATIONS.
15. TIE-RODS NUTS TO BE HAND TIGHTEN (NUT ON BOTH SIDES OF LUG) BEFORE FILLING.
16. HYDROSTATIC PRESSURE TEST FOR FOUR (4) HOURS FOR SPOOL PIECE SP1 & SP2.

DESIGN DATA (SEE NOTE 9)

DESIGN CODE (RELEVANT TO MODIFICATION)		ASME B 31.4 2006
DESIGN PRESSURE	kPa (g)	1950
OPERATING PRESSURE	kPa (g)	1200 (MAX)
DESIGN TEMPERATURE	°C	40
OPERATING TEMPERATURE	°C	AMBIENT
TIGHTNESS TEST	kPa (g)	2000
HYDROSTATIC PRESSURE TEST	kPa (g)	(SEE NOTE 12)
SERVICE		AVIATION KEROSEEN

NDE REQUIREMENTS (MODIFICATION)

1. 100% MT ON ALL COMPLETED WELDS.
2. 100% RT ON BUTTWELDS.
3. WELDING TO BE TESTED AT SPECIFIED PRESSURE FOR A PERIOD OF 4 HRS.
4. 100% MT ON ALL WELDS AFTER PRESSURE TEST.

PARTS LIST

MK	QTY	DESCRIPTION	MATERIALS
25	2	ADJUSTABLE PIPE SUPPORT NPS 400	———
24	1	PIPE NPS 16 SCH STD x 484 LG (API5L SEAMLESS)	SA 106 GR B
23	3	BALL VALVE 3"	———
22	48	WASHER NS ⅝"	MILD STEEL
21	48	HEX NUT ⅝" x 11 UNC	SA 194 GR 2H
20	24	STUDBOLT ⅝" x 11 UNC x 100 LG	SA 193 GR B7
19	6	GASKET TO SUIT NPS 3 CL 150	GORE UNIVERSAL PIPE GASKET
18	3	BLIND FLANGE NPS 3 CL 150 RF	SA 105
17	3	FLANGE NPS 3 CL 150 LWN RF	SA 105
16	2	BALL VALVE 1½"	———
15	64	WASHER NS ½"	MILD STEEL
14	64	HEX NUT ½" x 13 UNC	SA 194 GR 2H
13	32	STUDBOLT ½" x 13 UNC x 80 LG	SA 193 GR B7
12	8	GASKET TO SUIT NPS 1½ CL 150	GORE UNIVERSAL PIPE GASKET
11	6	BLIND FLANGE NPS 1½ CL 150 RF	SA 105
10	6	FLANGE NPS 1½ CL 150 LWN RF	SA 105
9	5	FLANGE NPS 16 CL 150 WN RF (HUB THK: SCH STD)	SA 105
8	4	SPECTACLE BLIND NPS 16 x 22 THK TO BE DRILLED ACCORDING TO ASME B16.5 CL 150	SA 105
7	224	WASHER NS 1"	MILD STEEL
6	64	STUDBOLT 1" x 8 UN x 170 LG	SA 193 GR B7
5	64	STUDBOLT 1" x 8 UN x 145 LG	SA 193 GR B7
4	224	HEX NUT 1" x 8 UN	SA 194 GR 2H
3	12	GASKET TO SUIT NPS 16 CL 150 (3mm)	UNIVERSAL PIPE GASKET
2	1	SPOOL PIECE SEE KOG DRG. 792mm-VCD1-B3	———
1	1	SPOOL PIECE SEE KOG DRG. 726mm-VCD1-B2	———

REFERENCE DRAWINGS	
MEGCHEM DRAWING NUMBER	DESCRIPTION
726mm-VCD1-B2 (REV. 0)	BELLOW SPOOL PIECE
792mm-VCD1-B3 (REV. 0)	BELLOW SPOOL PIECE

This drawing is the property of Megchem Engineering and Drafting Services (Pty) Ltd
Copyright Patents and all Industrial Property Rights Reserved

No.	REVISION DESCRIPTION	DRAWN	CHECKED	APPROVED	ENGINEER	DATE
07	AS-BUILT (MC2610879) MEGCHEM	J. KEMP	P. FARIA	P.L.v.d BERG	G. BLIGNAUT	2010-11-04

ORIGINAL CONTRACT / CHARGE NO.: MC2610879
CAD No.: MC2610879_VCD1_DWG_002_SHT01.DGN
DIMENSIONS IN mm UNLESS OTHERWISE STATED

ACSA AIRPORTS COMPANY SOUTH AFRICA

		DATE
DRAWN	G. LOMBARD	2010-03-09
CHECKED	P. FARIA	2010-03-09
REVIEWED	P. L. VAN DEN BERG	2010-03-09
ENGINEER	G. BLIGNAUT	2010-03-09
APPROVED	P. L. VAN DEN BERG	2010-03-09
SCALE:	1:10	DWG. SIZE A1

UNIT/ SECTION
AREA

MEGCHEM ENGINEERING AND
DRAFTING SERVICES (PTY) LTD
TEL: (016) 981 4806
FAX: (016) 981 3816
P O BOX 394 SASOLBURG 1947

DETAIL OF MODIFICATIONS ON VALVE CHAMBER VCD1

MEGCHEM OLD DRG No. MC2610879-VCD1-DWG-002
MEGCHEM NEW DRG No. MC2610879-VCD1-DWG-002
SHEET No. 001
REV No. 07