CHAINAGE 180

H.SCALE 1:200
V.SCALE 1:100

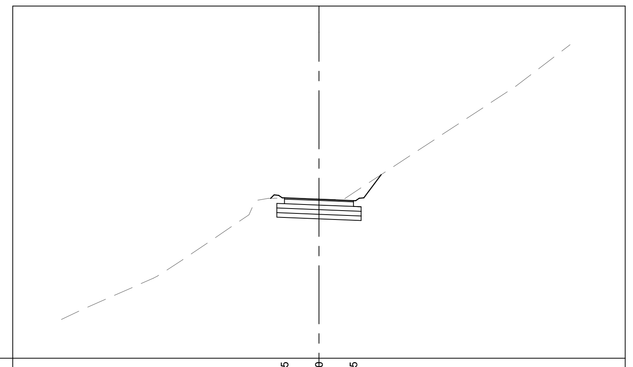

DATUM = 293

FINISHED	297.735	297.690	297.645
GROUND	297.726		
OFFSET	-2.250	0.000	2.250

CHAINAGE 170

H.SCALE 1:200
V.SCALE 1:100

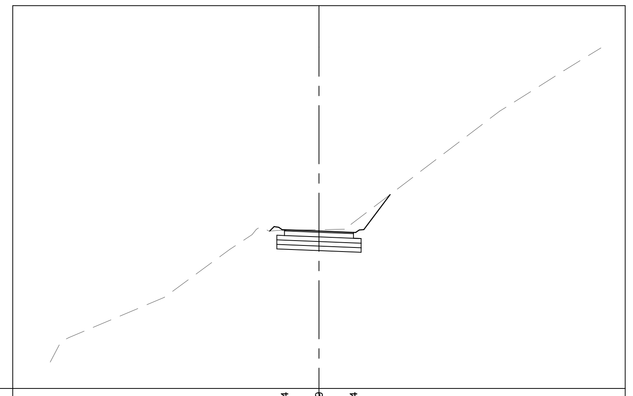

DATUM = 293

FINISHED	297.684	297.639	297.594
GROUND	297.609		
OFFSET	-2.250	0.000	2.250

CHAINAGE 160

H.SCALE 1:200
V.SCALE 1:100

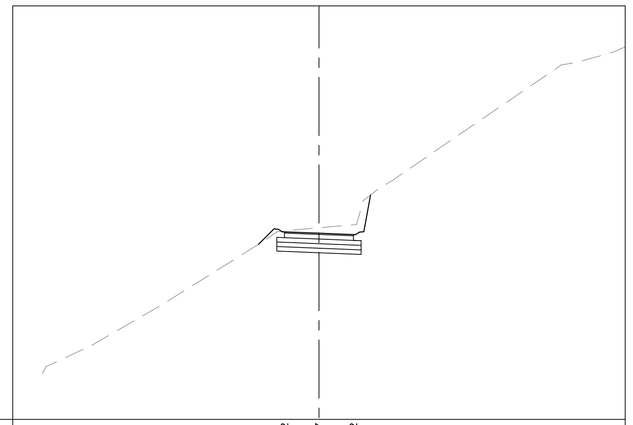

DATUM = 292

FINISHED	297.622	297.577	297.532
GROUND	297.560		
OFFSET	-2.250	0.000	2.250

CHAINAGE 155

H.SCALE 1:200
V.SCALE 1:100

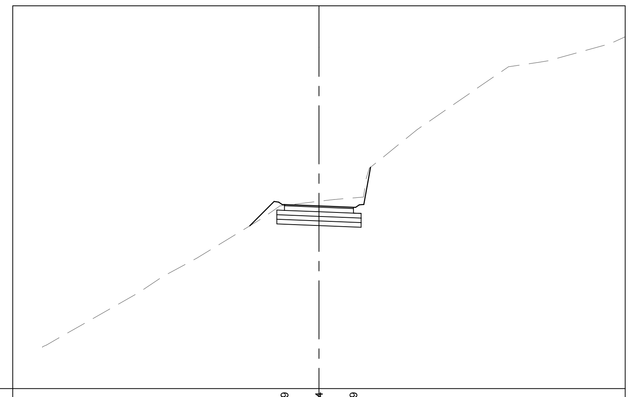

DATUM = 292

FINISHED	297.509	297.464	297.419
GROUND	297.465		
OFFSET	-2.250	0.000	2.250

CHAINAGE 220

H.SCALE 1:200
V.SCALE 1:100

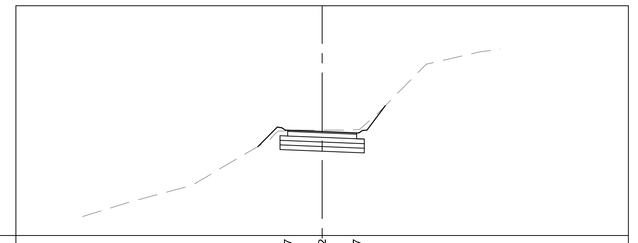

DATUM = 295

FINISHED	297.937	297.892	297.847
GROUND	297.942		
OFFSET	-2.250	0.000	2.250

CHAINAGE 210

H.SCALE 1:200
V.SCALE 1:100

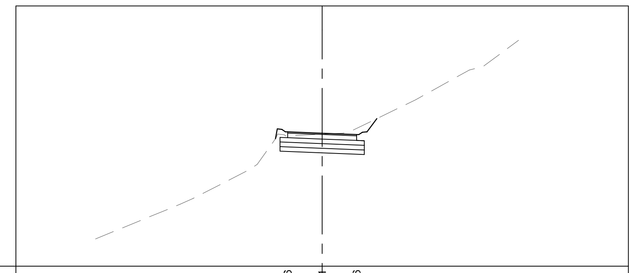

DATUM = 294

FINISHED	297.886	297.841	297.796
GROUND	297.762		
OFFSET	-2.250	0.000	2.250

CHAINAGE 200

H.SCALE 1:200
V.SCALE 1:100

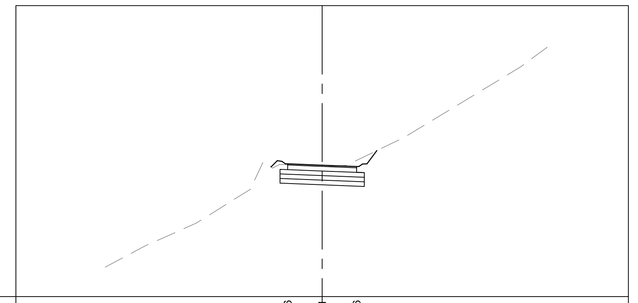

DATUM = 294

FINISHED	297.836	297.791	297.746
GROUND	297.817		
OFFSET	-2.250	0.000	2.250

CHAINAGE 190

H.SCALE 1:200
V.SCALE 1:100

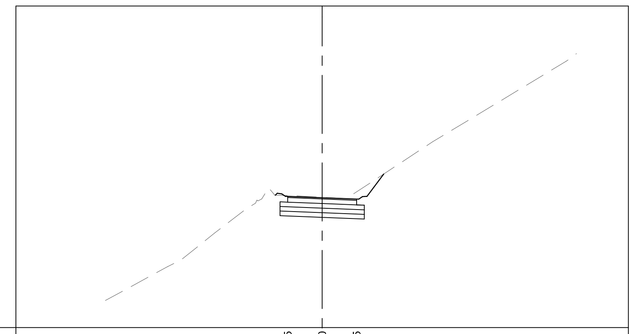

DATUM = 294

FINISHED	297.785	297.740	297.695
GROUND	297.805		
OFFSET	-2.250	0.000	2.250

CHAINAGE 185

H.SCALE 1:200
V.SCALE 1:100

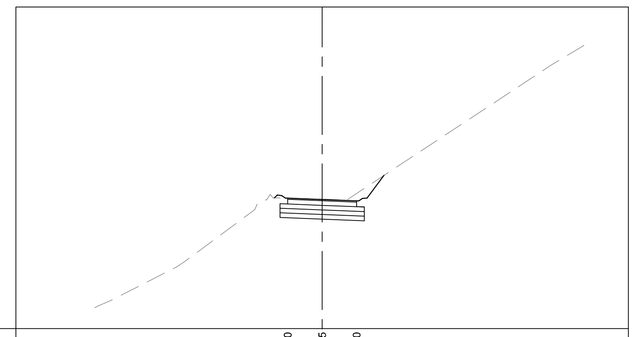

DATUM = 294

FINISHED	297.760	297.715	297.670
GROUND	297.770		
OFFSET	-2.250	0.000	2.250

CHAINAGE 260

H.SCALE 1:200
V.SCALE 1:100

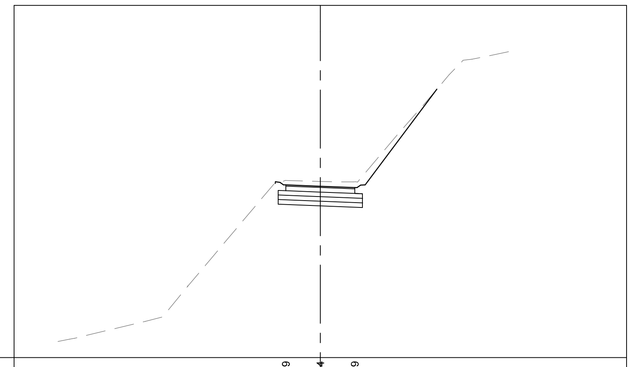

DATUM = 293

FINISHED	298.139	298.094	298.049
GROUND	298.282		
OFFSET	-2.250	0.000	2.250

CHAINAGE 250

H.SCALE 1:200
V.SCALE 1:100

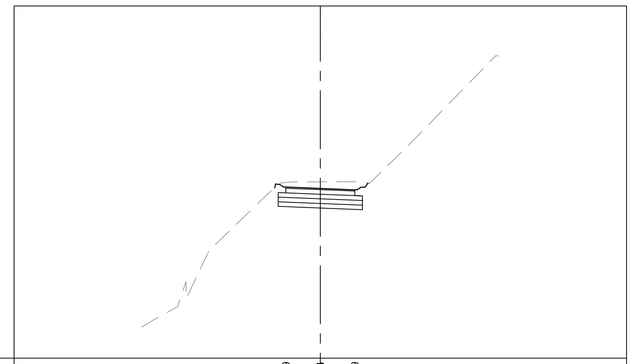

DATUM = 293

FINISHED	298.089	298.044	297.999
GROUND	298.255		
OFFSET	-2.250	0.000	2.250

CHAINAGE 240

H.SCALE 1:200
V.SCALE 1:100

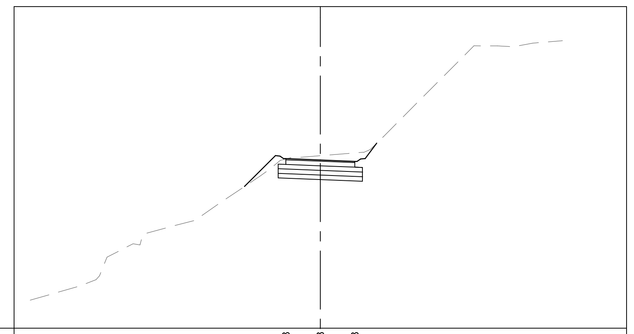

DATUM = 293

FINISHED	298.038	297.993	297.948
GROUND	298.069		
OFFSET	-2.250	0.000	2.250

CHAINAGE 230

H.SCALE 1:200
V.SCALE 1:100

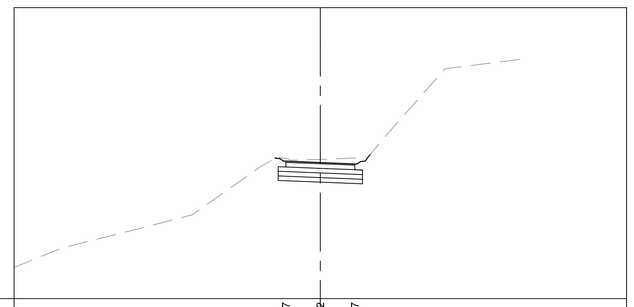

DATUM = 294

FINISHED	297.987	297.942	297.897
GROUND	298.020		
OFFSET	-2.250	0.000	2.250

CHAINAGE 300

H.SCALE 1:200
V.SCALE 1:100

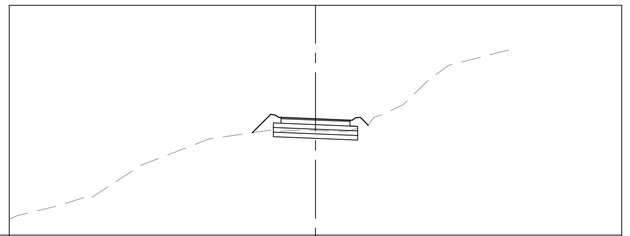

DATUM = 295

FINISHED	298.341	298.296	298.251
GROUND	297.933		
OFFSET	-2.250	0.000	2.250

CHAINAGE 290

H.SCALE 1:200
V.SCALE 1:100

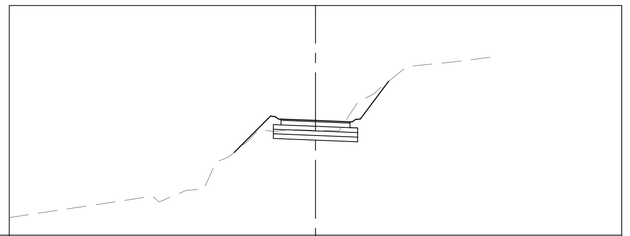

DATUM = 295

FINISHED	298.291	298.246	298.201
GROUND	297.941		
OFFSET	-2.250	0.000	2.250

CHAINAGE 280

H.SCALE 1:200
V.SCALE 1:100

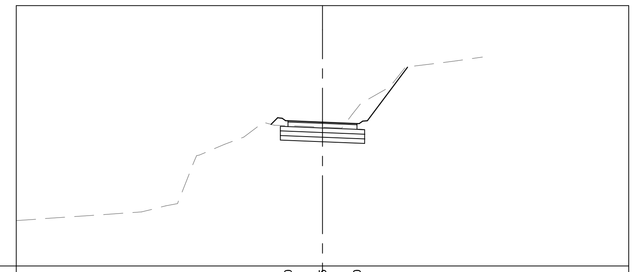

DATUM = 294

FINISHED	298.240	298.195	298.150
GROUND	298.080		
OFFSET	-2.250	0.000	2.250

CHAINAGE 270

H.SCALE 1:200
V.SCALE 1:100

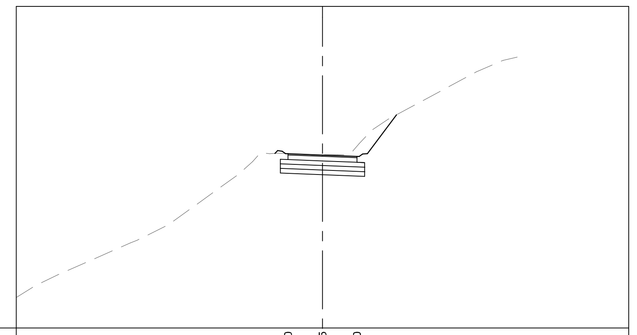

DATUM = 293

FINISHED	298.190	298.145	298.100
GROUND	298.153		
OFFSET	-2.250	0.000	2.250

CHAINAGE 265

H.SCALE 1:200
V.SCALE 1:100

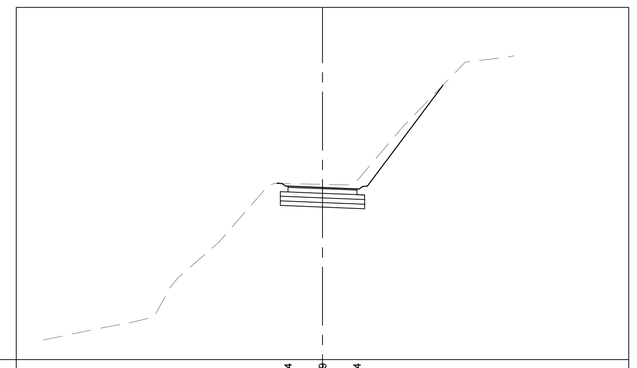

DATUM = 293

FINISHED	298.164	298.119	298.074
GROUND	298.233		
OFFSET	-2.250	0.000	2.250

FOR TENDER PURPOSES ONLY

New Road Area ..... m²

Unsurfaced to Surfaced ..... km's

AS BUILT

Date ..... Sign .....

eTHEKWINI MUNICIPALITY

ENGINEERING UNIT
ROADS PROVISION DEPARTMENT

PLAN DESCRIPTION	DWG. NO.	
CONTINUED FROM		
CONTINUED ON		
CROSS SECTIONS		
TYPICAL CROSS SECTION		
SURVEY LAYOUT		

REDUCED PLAN USE SCALE BELOW

0 10 20 30 40 50 60 70

70mm ON ORIGINAL PLAN

DRAWN IN ALLYWINDOWS

Revision	Date	Description

NOTE:
No construction work to commence until land and servitude acquisitions have been completed

Acquisitions completed

Date Engineer

NORTH POINT

UNDERGROUND SERVICES CHECKED

SERVICE	DATE	SIGNATURE
S.W.DRAINS		
SEWERS		
WATER MAINS		
G.P.O.CABLES		
ELECTRIC CABLES		
S.A.R. CABLES		
E.S.C. CABLES		
OIL PIPE LINE		

NOTE:
Only underground services affected by new construction work are shown. Care must be taken during excavations for road foundations, trenches etc... to avoid damage to underground services such as sewers, drains, cables, water mains and connections. Wherever possible these must be located before work proceeds.

Contract No: 1R-33142

Project Title: GRAVEL TO ASPHALT UPGRADE OF TRACK 87122 IN INANDA WARD 108

Drawing Title: CROSS SECTIONS CH155.000 TO CH300.000

Scales	Reference
AS SHOWN	

Designed	Date
D.NAICKER	03 OCTOBER 2025
Checked	Drawn in AllyWindows by
N.PARSHOTAM	D.NAIDOO

Manager RD (N)

D/H : RP

Head : Engineering

Drawing No 49483

Sheet 05 of 06 Sheets