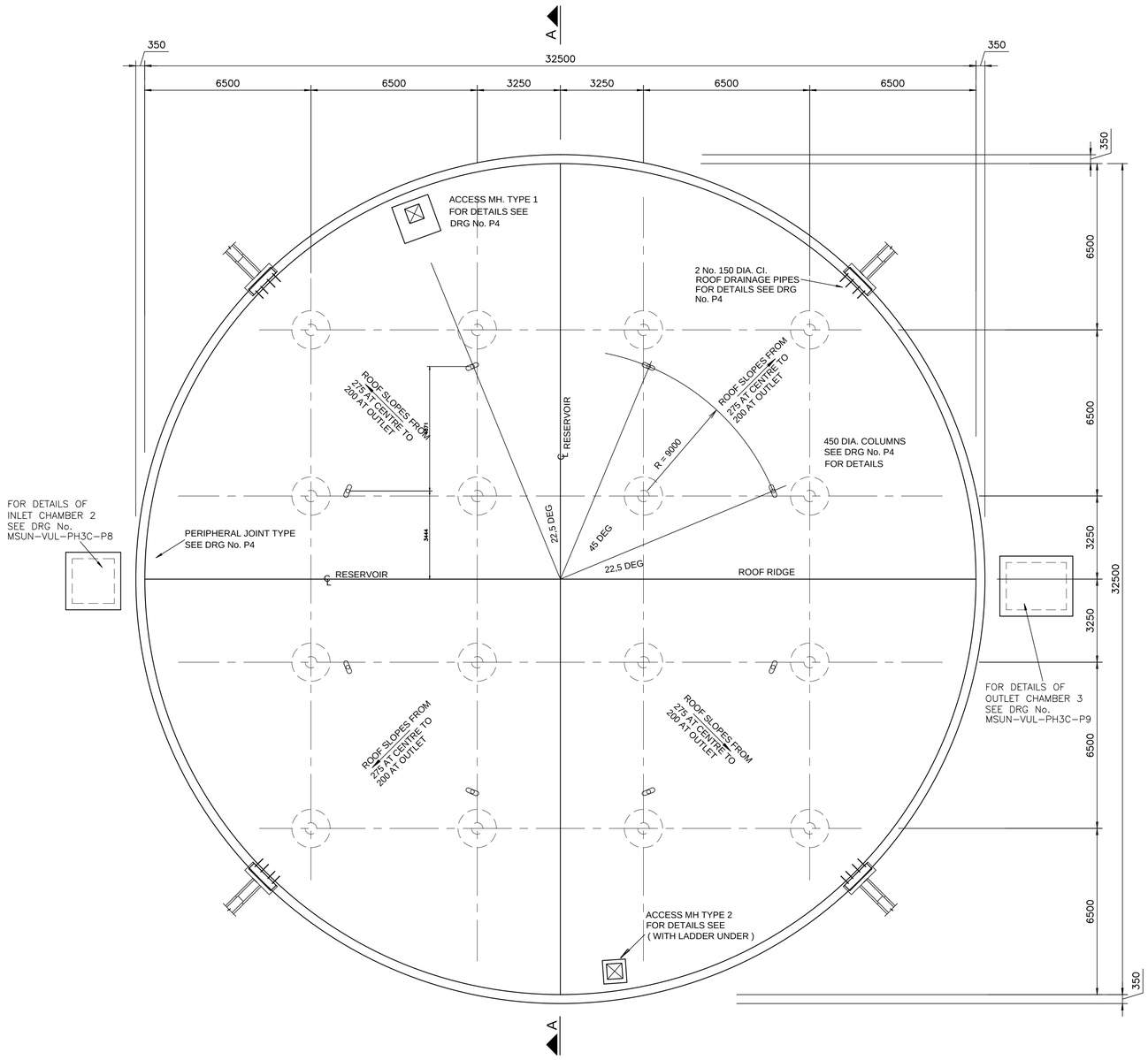

ROOF PLAN

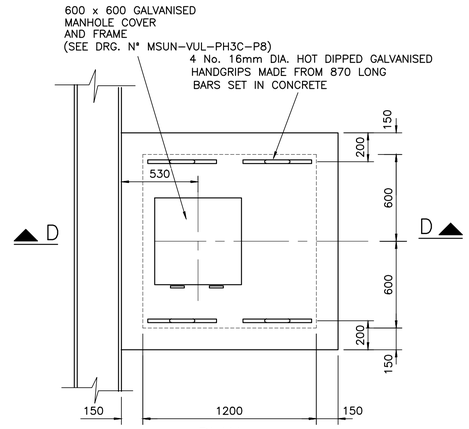

PLAN
1 : 20

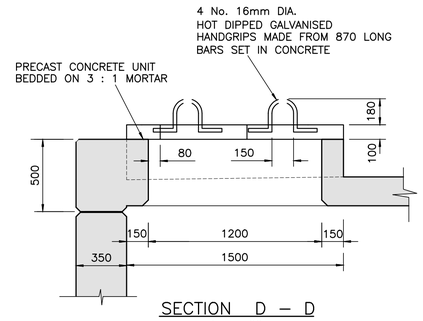

SECTION D – D
1 : 20

DETAIL OF ACCESS MANHOLE TYPE 1
1 : 20

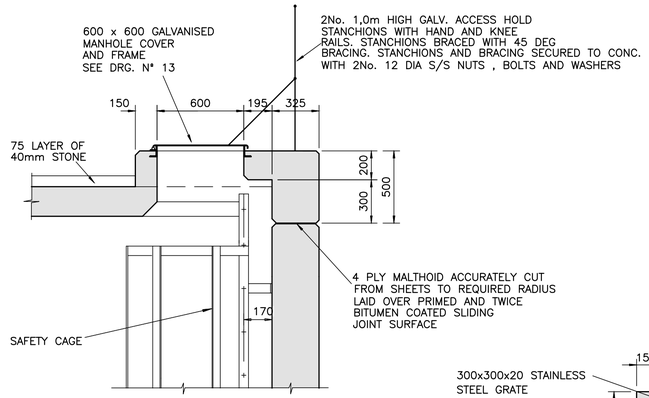

SECTION A – A
DETAIL OF ACCESS MANHOLE – TYPE 1
1 : 20

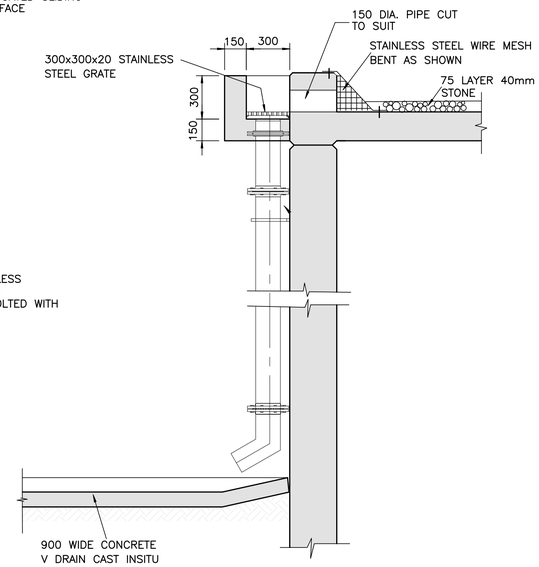

SECTION F – F
1 : 20

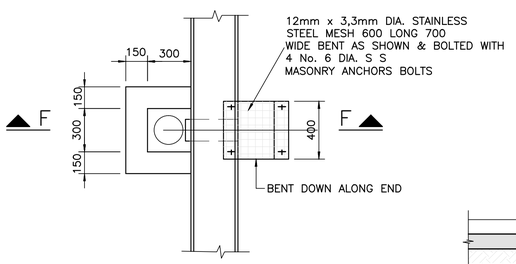

DETAIL OF ROOF RAINWATER OUTLET
1 : 20

TENDER DRAWING

ORIGINAL SCALE
AS SHOWN

No.	REFERENCE DRAWINGS

0	ISSUED FOR TENDER	JUL 25		
	REVISIONS	DATE	CHKD	APPRV

DESIGNED	R. PILLAY	
CHECKED		
DRAWN	P.N	
CHECKED		
PROJ. ENG.	M NSIBIRWA PR REG No. 930101	

LINGELA CONSULTING ENGINEERS (PTY) LTD

APPROVED : ..... (FOR TENDER)
M NSIBIRWA
PR REG No. 930101

Msunduzi Municipality
Pietermaritzburg
City of Choice

PROJECT/DRAWING TITLE
MSUNDUZI MUNICIPALITY
VULINDLELA PHASE 3C – WATER SUPPLY UPGRADE
PROPOSED RESERVOIR 13A (5.50 ML RESERVOIR)
ROOF PLAN AND DETAILS

ALT. DWG. No.	CONTRACT No.
SHT. No. OF	PROJECT No.
DRAWING No. MSUN–VUL–PH3C–P4	REVISION 0

CAD FILE CODE