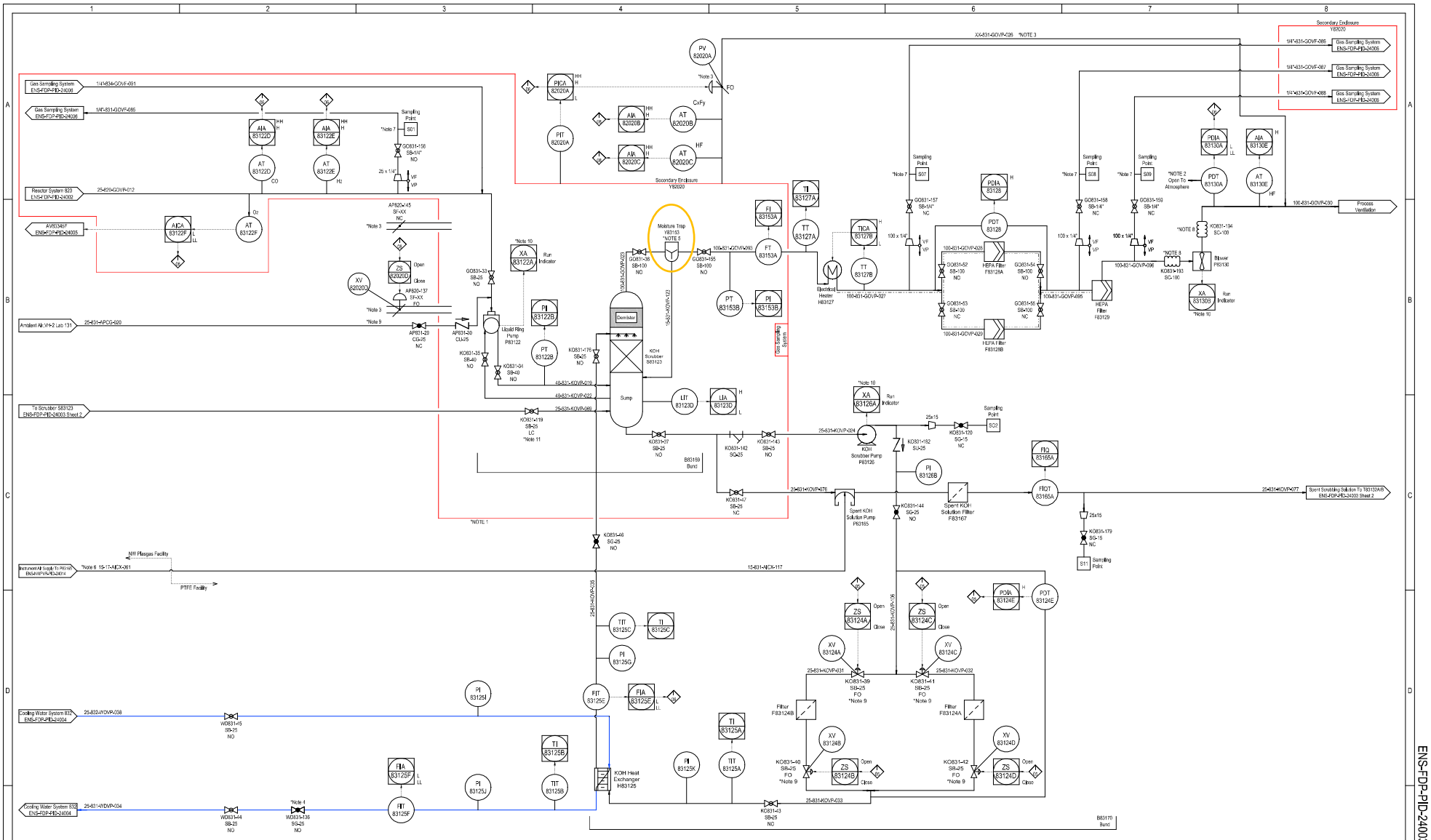

NOTES:

1. SECONDARY ENCLOSURE IS A CONTINUATION OF THE SAME BOX IN DRAWING NO.ENS-FDP-PID-24002.
2. PRESSURE DIFFERENTIAL MEASURED AGAINST THE ATMOSPHERIC PRESSURE.
3. LINE AND DAMPER SIZES TO BE DETERMINED DURING DESIGN OF THE VENTILATION SYSTEM.
4. THE GLOBE VALVES ARE USED TO SET THE CORRECT WATER FLOW RATE TO THE RESPECTIVE USERS AND NOT AS SHUT-OFF/ISOLATION VALVES. ONCE CORRECT FLOW RATE IS ESTABLISHED, THE VALVES ARE LOCKED IN POSITION.
5. THE MOISTURE TRAP Y83153 MUST DRAIN AUTOMATICALLY BACK TO THE SCRUBBER SUMP.
6. LINE SIZE TO BE CONFIRMED DURING DESIGN OF THE INSTRUMENT AIR SUPPLY SYSTEM.
7. GAS SAMPLES TO BE TAKEN AT THE TOP AND IN THE MIDDLE OF THE PROCESS PIPING TO PREVENT CONDENSATION OF MOISTURE, HF IN THE SAMPLE LINE.
8. THE BLOWER P83130 IS SITUATED BETWEEN THE TWO BELLOWS TO MINIMIZE VIBRATIONS.
9. ALL ACTUATED VALVES CAN BE OPENED/CLOSED REMOTELY FROM SCADA SCREEN IN THE CONTROL ROOM AND THE VALVE STATUS IS DISPLAYED ON SCADA SCREEN.
10. THE STATUS OF RUN INDICATOR XA83122A, XA83126A AND XA83130B ARE DISPLAYED ON SCADA SCREEN IN THE CONTROL ROOM.
11. VALVE KO831-119 IS LOCATED AT THE SUMP TANK OF SCRUBBER S83123, INSIDE THE SECONDARY ENCLOSURE IN THE PTFE FACILITY.

REFERENCED P&IDs & DOCUMENTS

1. ENS-FDP-PID-24002 - Reactor System 820
2. ENS-FDP-PID-24004 - Cooling Water System 832
3. ENS-MFP/VN-PID-24014 - Compressed Air Supply To Lab 150 And 131
4. ENS-FDP-PID-24005 - Gas Sampling System

FUNC.	NAME	DESIGNATION	SIGNATURE
PRP'D	N.Manilal	Process Engineer	
CHK'D	M.Mashaya	Process Engineer	
CHK'D	M.Correia	Senior Process Engineer	
CHK'D	S.Mngoma	Chief Mechanical Engineer	
CHK'D	G.Manuel	Chief Engineer Control & Instrumentation	
CHK'D	W. van den Berg	Chief Electrical Engineer	
APPR'D	K.Moodley	Chief Process Engineer	

COPYRIGHT
THIS DRAWING IS THE PROPERTY OF THE SOUTH AFRICAN NUCLEAR ENERGY CORPORATION AND MAY NOT, WITHOUT THE WRITTEN AUTHORITY OF THE SOUTH AFRICAN NUCLEAR ENERGY CORPORATION BE COPIED OR USED EITHER WHOLLY OR IN PART FOR ANY PURPOSE OTHER THAN FOR WHICH IS SUPPLIED.

REV	DESCRIPTION	PRP'D	DATE
3.0	Third revision - Updated the indicators FB3183F1 and FB3183F2 to FB3183F1 and FB3183F2 respectively	N.M	22/07/2024
5.0	Fourth revision - Updated the needle to globe valves in the primary cooling water return lines	N.M	13/02/2025
5.0	Fifth revision - Addressing outstanding HAZOP recommendations	N.M	24/03/2025
6.0	Sixth revision - Updated the drawing due to ECP 14, ENS-FDP-ECP-25001 changes, KO831-46 to a globe valve and control valve PV82020A shape to a damper	N.M	30/05/2025
7.0	Seventh revision - Updated damper valves code from SK to SF	N.M	23/07/2025
8.0	Eighth revision - Updated after HAZOP study for ENS-FDP-ECP-25001	N.M	28/08/2025

necsa

PROJECT	PTFE FILTER DESTRUCTION PROJECT		
TITLE	P&ID DIAGRAM		
	KOH SCRUBBER SYSTEM 831		
SCALE - NTS	DRG.No.	ENS-FDP-PID-24003	
UNITS - mm	SHEET	1 OF 2	TEAMCENTRE No. -

DESTROY ALL PREVIOUS PRINTS

REVISION 8.0

ENS-FDP-PID-24003 SHT.1 OF 2