500x500x850mm deep 10Mpamass concrete pads at intersection of beams only
Engineer to decide on site if required

SEE STD DRG FOR 180L WATER TANK DETAIL IN STAIR WELL

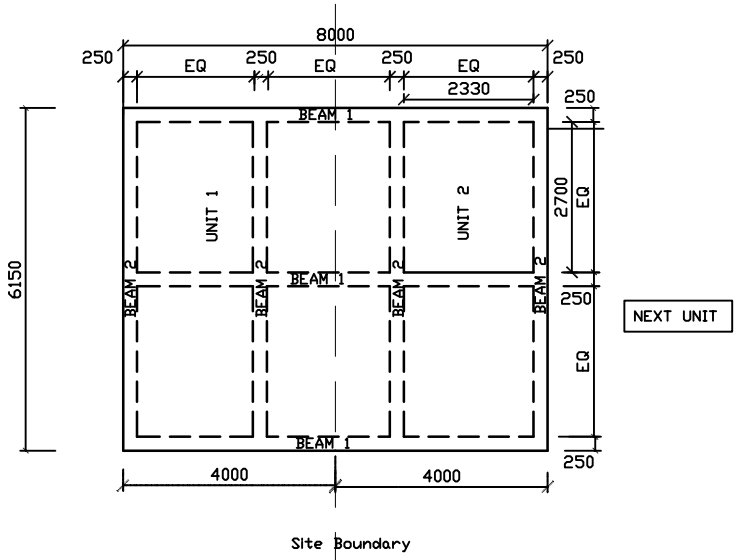

PLAN ON RAFT FOUNDATION

SCALE : NTS

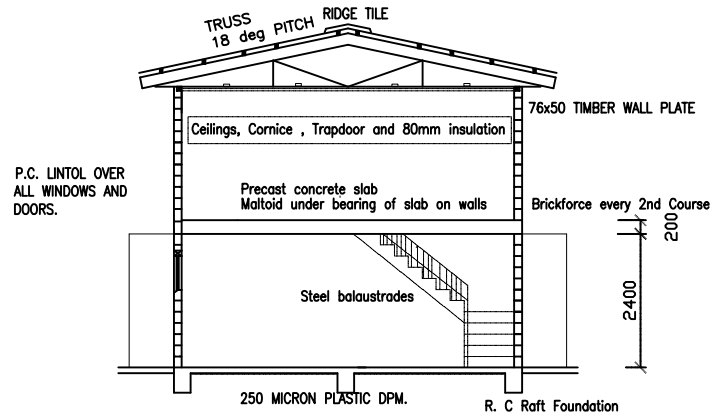

SECTION A - A

scale 1 : 100

Designed for Concrete strength of 25 MPa @ 28 days

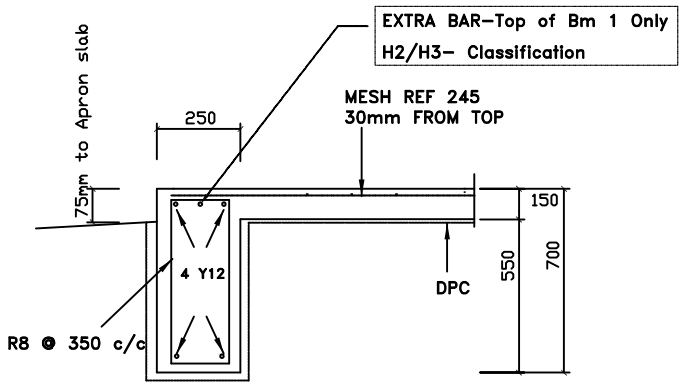

TYPICAL SECTION
THROUGH EXTERNAL BEAM

NTS

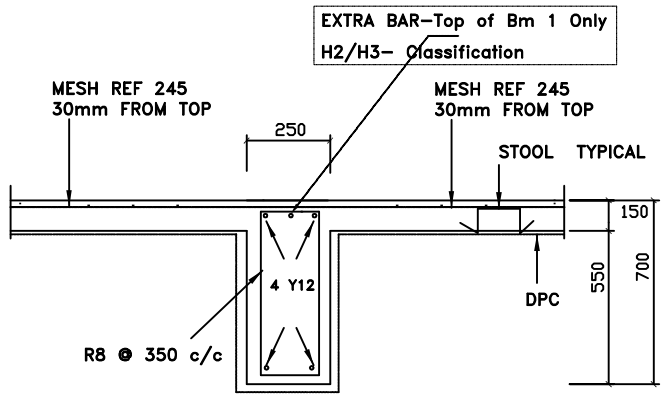

TYPICAL SECTION
THROUGH INTERNAL BEAM

NTS

MEMBER	No. Off	REINFORCEMENT					BENDING DIMENSIONS					
		Type & Dia	Mark	No in Each	Total No.	Length mm	Shape Code	A mm	B mm	C mm	D mm	E/R mm
BEAM 1	3	Y12	02	8	24	4500	34	4300				
		R08	03	20	60	1650	60	620	150			
BEAM 2	4	Y12	01	04	16	6350	35	6050				
		R08	03	18	72	1650	60	620	150			
		R08	08	12	12	1180	83	500	90	250	STOOLS	

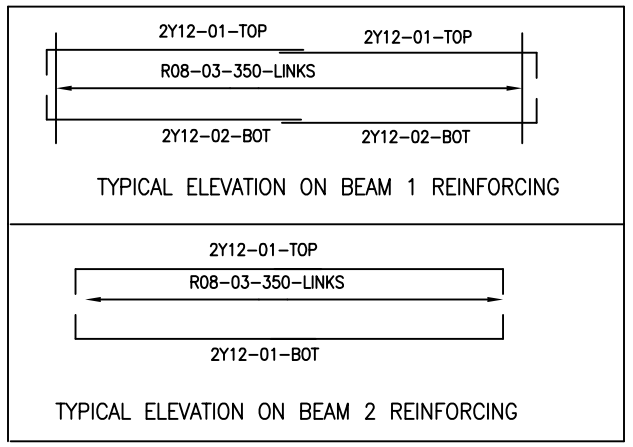

REINFORCING

Not required when units are staggered

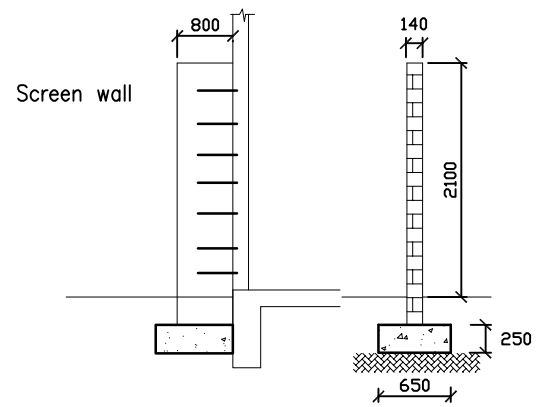

TYPICAL SECTION
THROUGH FREE STANDING
WALL BETWEEN UNITS

NTS

NOTES.
1. Platform to be stripped of all vegetation and topsoil prior to of placing fill material.
2. Fill material to be compacted in 300 mm layers to 95% Mod AASHTO.
3. All cut and fill banks are not to exceed a maximum slope of 1:1.75 or 34 deg
4. No service trenches to be left open for more than 2 days.
5. All service trenches to be compacted 93% MOD AASHTO.
6. The building platform must be well graded as indicated to prevent any water from ponding around the raft.
7. Provide P.C. lintols over all doors and windows or use ring beams if concrete blocks are used.
8. Concrete works strength at 28 days to be 25 Mpa.
9 . Cover to reinforcement: Beams 50mm ; Slab 40mm from the platform level.
10. All concrete must be well vibrated during placing using mechanical vibration.
11. All reinforcement must be inspected by the engineer prior to pouring of concrete.
12. If concrete blocks are used brickforce to be placed every 2nd course external walls and every second course internal walls.
13. Maxi block and concrete blocks external/ internal wall butt joint to SABS recommendations.
14. Provide benches to fills of platforms when n.g.l. slope exceeds 1:6.
15 .Reinforcement in external beams to be moved to maintain minimum cover requirements and accommodate the required recess at the threshold of each external door and the 50mm weather step at stoep where applicable.
16. 600 x 600 10MPa mass concrete pads to be placed at the intersection of the raft beams as instructed by the Engineer.
17. ANY DISCREPANCIES TO BE REPORTED BEFORE ANY WORK IS PUT IN HAND .
18. NO CONCRETE TO BE POURED WITHOUT THE ENGINEERS CONSENT .
19. NO STRUCTRUAL ALTERATIONS ARE TO BE MADE WITHOUT AMENDED DRAWINGS .
20. SLEEVES AND DUCTS TO BE PROVIDED FOR ALL PIPES AND SERVICES .

FOR H1 & H2 SOIL CLASSIFICATION

FOUNDATION DESIGNED FOR CATEGORY 1 EXPECTED DAMAGED AS SET OUT IN N.H.B.R.C. STANDARDS AND GUIDELINES.

NTUZUMA D

DOUBLE UNIT
RAFT DETAILS-TYPE 1 UNIT
DOUBLE RAFT -LEVEL
DOUBLE STOREY UNIT

DRG 13-06-23-06

V. GOVENDER

CELL 0833240073
E-mail: govendervadi@telkomsa.net