TRANSNET PIPELINES

CIVIL TECHNICAL DOCUMENT

EARTHWORKS SPECIFICATION

Document number	PL 889
Version number	1.0
Effective date	01 October 2025
Review date	01 September 2030

SUMMARY VERSION CONTROL

VERSION NO.	NATURE OF AMENDMENT	PAGE NO.	DATE REVISED
1.0	New Specification		

Note: Only latest amendments and/or additions are reflected in italics in the body of the document.

©Transnet SOC Ltd

Uncontrolled copy when printed

DOCUMENTATION SIGN-OFF SHEET

I, the undersigned hereby approve this procedure.

ROLE	CAPACITY/ FUNCTION	NAME	SIGNATURE	DATE
Author:	**Engineer-In-Training: Civil**	Zamagema Sosibo		25/09/2025
Co-Author:	**Civil Engineer**	Katleho Nthoba		25.09.2025
	Review document for adequacy and practicability. Comments:			
Approved by:	**Principal Engineer: Civil**	Makhado Mulaudzi		25.09.2025
	Approves document for use. Comments:Any deviation from this specification should be approved by the Principal Civil Engineer			

TABLE OF CONTENTS

1. GENERAL 10
1.1. Purpose 10
1.2. Applicability 10
1.3. Reference Documents 10
2. SITE PREPARATION 11
2.1 Clearing 11
2.2 Conservation of Topsoil 11
2.3 Disposal 11
2.4 Geotechnical Site Investigations 11
2.4.1 Geotechnical Assessment Requirements 12
3. EXCAVATION 13
4. MATERIAL 13
5. COMPACTION 14
6. FINISHING 14
6.1 Final Grading 14
6.2 Topsoiling 15
6.3 Grass or Other Vegetation 15
7. EARTHWORKS REQUIREMENTS 15
7.1 Manifold Area 15
7.2 Block Valve Chambers 16
7.3 Buried Pipelines and Prefabricated Culverts 16
7.3.1 Selected Granular Material 17
7.3.2 Selected Fill Material 17
7.3.3 Fine Granular Material 17
7.3.4 Backfill Material 17
7.3.5 Bedding and Padding 17
7.4 Pavements 17
7.4.1 Service Roads 17
7.4.2 Gravel/ Haul Roads 18

©Transnet SOC Ltd

Uncontrolled copy when printed

7.5 Single- storey Type 1 Masonry Buildings.....19
7.5.1 Geotechnical investigations 19
7.5.2 Foundations.....19

ABBREVIATIONS

TPL	Transnet Pipelines
SANS	South African National Standard
TRH	Technical Recommendations for Highways
OMC	Optimum Moisture Content
Mod AASHTO	Modified American Association of State Highway and Transportation Officials
PI	Plasticity Index
CBR	California Bearing Ratio
OSHA	Occupational Safety and Health Administration
C3	Cement-stabilized material

DEFINITIONS

Earthworks	Activities involved in the excavation, transportation, placement, and compaction of fill materials or soils to prepare the earth for construction.
Optimum Moisture Content	Moisture content at which maximum dry density of soil is obtained for a specific compaction effort.
Mod AASHTO maximum dry density	Highest density obtainable when compaction is carried out on soil at varied moisture contents at the modified AASHTO compaction effort in accordance with the requirements of TMH1 – A7
Plastic Limit	Empirically established moisture content at the boundary between the plastic and semi-solid states.

©Transnet SOC Ltd

Uncontrolled copy when printed

Liquid Limit	Empirically established moisture content at the boundary between the liquid and the plastic states.
Plasticity Index	Difference between the liquid limit and the plastic limit.
California Bearing Ratio	Load in newtons, expressed as a percentage of standard values, required to allow a piston of 1 935 mm^2 to penetrate a surface of a compacted material at a rate of 1,27 mm/min to depths of 2,54 mm, 5,08 mm, and 7,62 mm where the corresponding standard values for these depths are 13,344 kN, 20,016 kN and 25,354 kN, respectively.
Backfill	Material placed and compacted on top of the fill blanket to reinstate the excavated trench to the original level.
Retaining wall	Wall intended to resist the lateral displacement of materials
Geotechnical site investigation	Process of evaluating the geotechnical character of a site in the context of existing or proposed works or land usage.
Competent person (civil engineering)	Person who a. is registered in terms of the Engineering Profession Act ,2000 (Act No. 46 of 2000), as either a Professional Engineer or a Professional Engineering Technologist or a Professional Engineering Technician, b. has a tertiary qualification (Degree or Bachelor of Technology or Advanced Diploma or National Diploma) in civil engineering, and c. is generally recognized as having the necessary experience and training to undertake rational assessments or rational designs in the field of civil engineering.
Competent person (geotechnical)	Person who is registered in terms of the Engineering Profession Act ,2000 (Act No. 46 of 2000), as either a Professional Engineer

©Transnet SOC Ltd

Uncontrolled copy when printed

	or a Professional Engineering Technologist, or a Professional Engineering Technician a. is registered as a Professional Natural Scientist in terms of the Natural Scientific Professions Act, 2003 (Act No. 27 of 2003), and has a BSc (Hons) degree or higher qualification in engineering geology, or registered as a Certificated Natural Scientist and has a recognized 3-year qualification or equivalent qualification at NQF 7 or higher and b. and has suitable experience in geotechnical site investigations or foundation design (or both)
Collapsible soil	Soil with a high void ratio and with a low density that, when subjected to a combination of direct actions and an increase in soil moisture content, experiences sudden or rapid settlement.
Expansive soils	Fine-grained soil, the clay mineralogy of which is such that it changes in volume to varying degrees in response to changes in moisture content, i.e. the soil increases in volume (heaves or swells) upon wetting up and decreases in volume (shrinks) upon drying out.
Dispersive soils	Clay-rich soil that lose their structure and aggregate stability when exposed to water, causing individual clay particles to break apart and go into suspension.
Manifold	A centralized network of pipes, valves and fittings used to control and direct the flow of gas and hydrocarbons – between storage tanks and pipelines
Service roads	Roads inside the depots and alongside the servitude, constructed primarily to provide access for maintenance and operational activities. They may be surfaced with asphalt, gravel, paving

©Transnet SOC Ltd
Uncontrolled copy when printed

	blocks, concrete, or other materials based on functional requirements.
Construction / Haul roads	Roads outside the TPL depots used for temporary or low-traffic situations such as construction sites. They are specifically built for moving heavy loads such as trucks transporting materials or equipment.
C3	A moderately strong cement-treated granular material, where: C = Cemented material and 3= strength class (typically unconfined compressive strength between 3 and 6 MPa)
C35	Structural grade concrete, suitable for load-bearing applications with a compressive strength of 35 MPa (megapascals) at 28 days, testing using standard concrete cute (150 mm)
Type 1 masonry building	Building not used for storage or industrial purposes, and with masonry walls that are not supported by steel, concrete or reinforced masonry columns
Masonry	A building technique that uses bricks, clay, stone, or concrete to make structures.

©Transnet SOC Ltd

Uncontrolled copy when printed

1. GENERAL

1.1. Purpose

This document aims to define the general requirements for earthworks in and around Transnet Pipelines (TPL) facilities and along the pipeline routes within TPL's servitude . It encompasses earthworks activities such as site preparation, excavation, grading, backfilling, and specific requirements for stabilization and compaction. Additionally, it addresses other related aspects, including trench safety, material specifications where applicable, design requirements, and quality control measures like material testing.

1.2. Applicability

This specification is applicable to all Transnet Pipelines facilities, along the pipeline within TPL's servitude and the service roads/ access routes to the block valves chambers and the pipeline.

1.3. Reference Documents

Document Title	**Document No.**
Bedding and Padding Specification	PL 890
Construction Specification	PL 887
Construction works Part BE1: Earthworks (general)	SANS 2001-BE1: 2008
Construction Works Part BS1: Site clearance	SANS 2001- BS1:2008
Earthworks for Buried Pipelines and Prefabricated Culverts	SANS 2001 – DP1
The Application of the National Building Regulations Part G – Excavations	SANS10400 -G
The Application of the National Building Regulations Part H – Foundations	SANS10400 -H
Guidelines for Road Construction Materials	TRH14 :1985

©Transnet SOC Ltd

Uncontrolled copy when printed

Structural Design of Flexible Pavements for Interurban and Rural Roads	TRH 4
Occupational Safety and Health Administration – Trenching and Excavation Safety	OSHA 2226

**If any specific aspect of the work is not addressed by this specification or SANS Codes, any other standard practice specified by the Engineer shall be followed.

2. SITE PREPARATION

2.1 Clearing

All areas in which excavation is to take place or that are to be covered by terraces , banks or structures shall be cleared in accordance with the requirements of SANS 2001 – BS1. The area shall also be stripped of all remaining vegetation and surface soil to depth of up to 150 mm. Unsuitable material shall be disposed of as specified in 2.3.

2.2 Conservation of Topsoil

When suitable topsoil is present within the area to be cleared, it, along with any grass or other appropriate vegetation, shall be preserved. If not used immediately or stockpiled, the topsoil must be set aside for future use.

2.3 Disposal

Surplus and unsuitable material shall be disposed of in accordance with Transnet's Environmental Standards for Construction and the local municipality by laws.

2.4 Geotechnical Site Investigations

The required level of detail of a geotechnical site investigation shall be governed by the project scope and may include one or more of the following:

a. Evaluation of the geology and hydrogeology of the site.
b. Examination of existing geotechnical information pertaining to the site.

©Transnet SOC Ltd

Uncontrolled copy when printed

c. Excavation or boring in soil or rock and systematic description of the soil and rock profiles.
d. Determining the depth of any fill that might be present.
e. In-situ assessment of geotechnical properties of materials.
f. Recovery of samples of soil or rock examination, identification, recording, testing or display.
g. Testing of soil or rock samples to quantify properties relevant to the purpose of the investigation.
h. Evaluation of geotechnical properties of tested soils.
i. Reporting of the results.
j. Providing recommendations and conclusions

2.4.1 Geotechnical Assessment Requirements

Prior to the commencement of any earthworks, geotechnical investigations and/or site surveys must be undertaken by a competent person (geotechnical or civil engineering) to assess ground conditions and mitigate potential risks. These assessments are particularly critical in areas where problematic soil types or site-specific challenges are anticipated.

2.4.1.1 Soil Conditions Requiring Investigation:

- Expansive soils
- Collapsible soils
- Highly compressible soils
- Dispersive soils
- Dolomitic terrain

2.4.1.2 Site Conditions Requiring Investigation:

- High water tables or wetland areas
- Poorly drained locations
- Previously undermined ground
- Sloped or steep terrain
- Proximity to existing infrastructure
- Sites intended to support heavy or large-scale structures
- Coastal or marine-adjacent environments

©Transnet SOC Ltd

Uncontrolled copy when printed

3. EXCAVATION

3.1. All excavations must be conducted in compliance with SANS 10400-G and the Occupational Safety and Health Administration (OSHA- Trenching and Excavation Safety) standards.

3.2. Excavation work shall be so executed that material from excavations shall be used in preference to materials from borrow pits and other sources.

3.3. Support systems like shoring, bracing, or underpinning must be provided when needed to ensure the stability of adjacent structures, including nearby buildings, walls, sidewalks, and pavements, during excavation.

3.4. A protective system is not required when excavation is made entirely in stable rock or when an excavation is less than 1.52 meters deep and a competent person has examined the ground and found no indication of a potential cave-in.

3.5. Material shall be transported directly to its final position without being stockpiled, and if stockpiling is unavoidable, materials intended for different uses shall be stockpiled separately.

3.6. No mechanical driven equipment may be used within the area of the pipeline servitude/s unless otherwise authorised by the Transnet Pipelines Servitude Officer.

3.7. No blasting is allowed within the pipeline servitude. Application to carry out blasting within 500m of the pipeline must be made to the Transnet Pipelines Servitude office in writing in terms of paragraph 17.1 chapter 10 of the regulations embodied in the Explosives Act and Regulations (Act 26 of 1956) as amended.

4. MATERIAL

4.1. The material properties of fill and backfill shall be in accordance with the requirements of TMH1– A3, TMH1 – A7 and TMH1- A8, as relevant.

4.2. Backfill material from trenches is to be used as stated in 3.2, and the backfill material shall:

a. be free from vegetations, roots, salts, rubbish, lumps, organic matter, and any other harmful chemicals etc. and shall be approved by the Engineer.

©Transnet SOC Ltd

Uncontrolled copy when printed

b. be broken into pieces not exceeding 150mm size in any direction and mixed with fine materials consisting of decomposed rock, or any approved earth to fill the voids as far as possible and the mixture shall then be used for filling and

c. be able to be placed without significant voids and be so compacted as to avoid significant settlement.

d. not contain more than 10% of rock or hard fragments that are retained on a sieve of nominal aperture size 50 mm and shall not contain large clay lumps that do not break up under the action of compaction equipment.

4.3. Should the Engineer specify the use of granular materials and soils (G1 to G10) from borrow pits and other sources, the materials must conform to the TRH14 (1985) materials classification system and comply with the specifications listed in table 1 of Annexure A.

4.4. The use of these materials shall be supported by a material certificate, which must be submitted to the Project Manager.

5. COMPACTION

5.1. Unless otherwise specified in the scope of work, each layer on an embankment shall be compacted at OMC to a density of at least 90% of Mod AASHTO maximum dry density in the case of cohesive soil, or 98% in the case of non-cohesive soil.

5.2. Each trench shall be backfilled in layers of thickness (after compaction) that do not exceed 150 mm, and the material shall be compacted to the same density as that of the undisturbed surrounding ground, or to 90% of mod AASHTO maximum dry density, whichever is higher.

5.3. The tests required for soils and gravels vary according to their classification in terms of TRH14. The tests required for materials G4 to G10 are listed in table 2 of Annexure A.

6. FINISHING

6.1 Final Grading

©Transnet SOC Ltd

Uncontrolled copy when printed

On completion of earthworks to the finished level and of backfilling of all holes, trenches, etc., the whole surface shall be graded, shaped and compacted to final grades and levels.

6.2 Topsoiling

Where required in terms of the scope of works, topsoil shall be placed on level and slightly graded areas and shall be lightly compacted by wheeled vehicles or by tamping, and trimmed neatly to the required lines, grades and levels. The final thickness of topsoil after compaction shall be at least 75mm.

6.3 Grass or Other Vegetation

Where required in terms of the specification data, grass or other vegetation shall be planted after topsoiling has been completed. On completion of planting, the planted area shall be neatly trimmed and well-watered and not allowed to dry out until it is established, or for the period required in the scope of work.

7. EARTHWORKS REQUIREMENTS

This section outlines the general earthwork requirements for specific areas within and surrounding the TPL facilities and servitudes. It serves as a guide for typical earthwork specifications, unless otherwise directed by the Engineer.

7.1 Manifold Area

This section applies to areas beneath the concrete **within the manifolds**, such as:

- Surface beds
- Raft foundations
- Retaining walls
- Concrete channels
- Draw Boxes
- Manhole foundations
- Culverts

Unless otherwise specified by the Engineer, the standard earthworks for the areas listed above, as shown in figure 1, shall include:

©Transnet SOC Ltd
Uncontrolled copy when printed

a. A 150 mm layer at the bottom of the excavation, ripped and recompacted to 90 % Mod AASHTO.
b. A minimum of three layers of G6 quality material compacted to 98 % Mod AAHSTO in layers not exceeding 150 mm.
c. A 50 mm thick blinding where applicable.

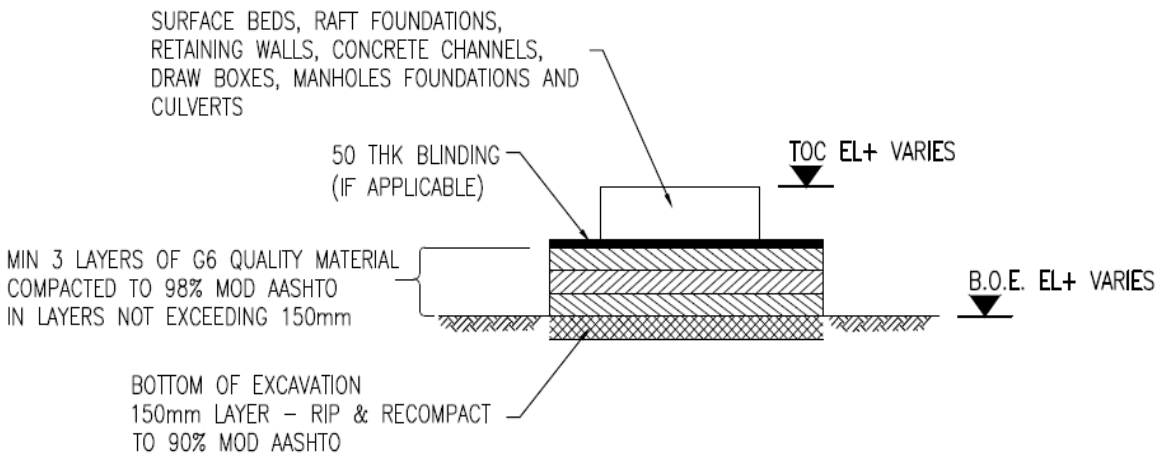

Figure 1: Typical Detail – Earthworks Section Under Concrete

7.2 Block Valve Chambers

Unless otherwise specified by the Engineer, the typical earthworks for a block valve (BV) chamber shall include the following:

a. A 150 mm layer of in-situ material ripped and recompacted to 93% Mod AASHTO.
b. A minimum of two layers of G6 material compacted to 98% Mod AASHTO in layers not exceeding 150mm . Provided the in-situ material is suitable, it may be utilized.
c. A 2mm thick HDPE liner .
d. A maximum particle of 3mm is allowed beneath the HDPE liner. If the excavated soil is unsuitable , a stabilised sand blinding 50 mm (minimum) should be placed.

7.3 Buried Pipelines and Prefabricated Culverts

©Transnet SOC Ltd

Uncontrolled copy when printed

This section of the specification addresses earthworks for trenches for all types and sizes of buried pipelines, ducts, cables, and prefabricated culverts. All works shall be accordance with SANS2001 – DP1.

7.3.1 Selected Granular Material

Selected granular material shall, unless otherwise specified in the scope of work, be material of a granular, non-cohesive nature that is free draining, has a maximum aggregate size of 20 mm and has a compaction fraction that does not exceed 0.3.

7.3.2 Selected Fill Material

Selected fill material shall, unless otherwise specified in the scope of work, be material that has a PI that does not exceed 6 and that is free of vegetation, lumps and stones the largest dimension of which does not exceed 30 mm.

7.3.3 Fine Granular Material

Selected fill material all of which passes through a 6,70 mm sieve and not more than 10% of which passes through a 0,15 mm sieve.

7.3.4 Backfill Material

Backfill material shall be as indicated in 4.2.

7.3.5 Bedding and Padding

The bedding and padding materials to be placed around and over the pipelines in trenches shall be in accordance with the Transnet Pipelines Bedding and Padding Specification (PL 890).

7.4 Pavements

7.4.1 Service Roads

Service roads are surfaced with asphalt, gravel, paving blocks, or concrete, depending on functional requirements.

7.4.1.1 In areas subjected to loads from road traffic , the backfill shall have a PI that does not exceed 12 and a minimum CBR of 15% at specified density if the backfill is to be placed in the upper 150mm of the subgrade . If placed lower in the subgrade , the backfill must have a minimum CBR of 7%.

©Transnet SOC Ltd

Uncontrolled copy when printed

7.4.1.2 The road shall be suitably designed to withstand the maximum load imposed by all operational vehicles required for depot and/or servitude activities, and to allow for travel with reasonable ease and safety at a speed of 15 km/hr within the depot.

7.4.1.3 Where specified , a wearing course , complying with the following , shall be provided over the foundation layer:

a. Thickness (minimum) : 150 mm
b. Percentage by mass passing the 0.075 mm sieve : 10 to 40.
c. PI : 8-17
d. Compaction : 93 % Mod AASHTO maximum dry density in the case of cohesive soil or 98 % in the case of non-cohesive soil.
e. Minimum CBR after compaction : 15

7.4.1.4 In all cases, effective drainage of the road shall be provided to prevent ponding. Unless otherwise specified, the cross fall shall be in a direction away from the earthworks.

7.4.1.5 Concrete Service Road

Unless otherwise specified by the Engineer, the typical earthworks for concrete service roads shall include:

a. Subbase layer: 150 mm G7 compacted to 95% Mod AASHTO
b. Base layer: 150 mm C3 compacted to 95% Mod AASHTO
c. Surface layer: 190 mm reinforced concrete grade C35

7.4.1.6 Asphalt Service Road

Unless otherwise specified by the Engineer, the typical earthworks for asphalt service roads shall include:

a. Subbase layer: 150 mm G7 compacted to 93% Mod AASHTO
b. Lower subbase: 150 mm C3 compacted to 95% Mod AASHTO
c. Upper base layer: 150 mm G1 compacted to 98% Mod AASHTO
d. Surface layer: 40 mm asphalt continuously graded

7.4.2 Gravel/ Haul Roads

Unless otherwise specified by the Engineer, the typical earthworks for gravel roads shall include:

©Transnet SOC Ltd
Uncontrolled copy when printed

a. Lower subbase layer: 150 mm G5 compacted to 93% Mod AASHTO dry density
b. Base layer : 150 mm G5 compacted to 95% Mod AASTHO dry density
c. Gravel surface layer: 150 mm wearing course gravel compacted to 95% Mod AASHTO dry density

7.5 Single-Storey Type 1 Masonry Buildings

7.5.1 Geotechnical investigations

7.5.1.1 Geotechnical site investigations shall be undertaken under the direction of a competent person (geotechnical), who shall document and formulate an opinion regarding the parameters upon which the design of the foundations is to be based and, in the case of a, shall classify the site in accordance with the descriptors contained in table 1 of 4.2.3 of SANS 10400 – H Foundations.

7.5.1.2 The competent person (geotechnical) shall investigate and advise on the necessity of installing subsurface drains on sites:

a. in marshy areas
b. that have shallow water tables, and
c. that are to be terraced to the extent that the depth of cut below original ground level exceeds 0.75m .

7.5.2 Foundations

7.5.2.1 Foundations for all buildings shall be designed by a competent person to reduce total soil movements and shall be in accordance with SANS10400-H.

7.5.2.2 On sloping sites steeper than 1:4 where landslip is not a consideration, the site shall be cut or backfilled (or both) and compacted to not less than 93% Mod AASHTO density at -1% to +2% of optimum moisture content and benched into the in-situ material, under the supervision of a competent person (civil engineering) such that the fill-

a. extends at least 1m beyond the face of the structure and has a side slope not steeper than 1:1 with respect to the horizontal, and the slope of the fill is covered with a lightly compacted material to reduce the external slope to 1:2 or flatter, or

©Transnet SOC Ltd

Uncontrolled copy when printed

b. is retained by either a deepened reinforced concrete beam which forms an integral part of the slab, or by a masonry foundation wall in accordance with the requirements of SANS 10400 -B or SANS10400-K, as relevant.

ANNEXURE A

Table 1: Granular Materials and Soils Specification

Code	Material	Abbreviated Specification
G1	Graded crushed stone	Dense - graded unweathered crushed stone; Maximum size 37.5 mm, 86 - 88 % apparent relative density; Soil fines PI < 4
G2	Graded crushed stone	Dense - graded crushed stone; Maximum size 37,5 mm;100 - 102 % Mod. AASHTO or 85 % bulk relative density; Soil fines PI < 6
G3	Graded crushed stone	Dense -graded stone and soil binder; Maximum size 37.5 mm, 98 - 100 % Mod. AASHTO: Soil fines PI < 6
G4	Crushed or natural gravel	Minimum CBR = 80 % @ 98 % Mod. AASHTO; Maximum size 37.5 mm, PI < 6
G5	Natural gravel	Minimum CBR = 45 % @ 95 % Mod. AASHTO; Maximum size 63 mm or 2/3 of layer thickness, Density as per prescribed layer usage, PI < 10
G6	Natural gravel	Minimum CBR = 25 % @ 95 % Mod. AASHTO; Maximum size 63 mm or 2/3 of layer thickness; Density as per prescribed layer usage; PI < 12;
G7	Gravel/ soil	Minimum CBR = 15 % @ 93 % Mod. AASHTO; Maximum size 2/3 of layer thickness; Density as per prescribed layer usage; PI < 12
G8	Gravel/ soil	Minimum CBR = 10 % @ 93 % Mod. AASHTO; Maximum size 2/3 of layer thickness; Density as per prescribed layer usage; PI < 12

©Transnet SOC Ltd

Uncontrolled copy when printed

G9	Gravel/ soil	Minimum CBR = 7 % @ 93 % Mod. AASHTO; Maximum size 2/3 of layer thickness; Density as per prescribed layer usage; PI < 12
G10	Gravel/ soil	Minimum CBR = 3 % @ 93 % Mod. AASHTO; Maximum size 2/3 of layer thickness; Density as per prescribed layer usage; or 90 % Mod. AASHTO.

©Transnet SOC Ltd

Uncontrolled copy when printed

Table 2: Materials Testing

Tests Required	Material Classification TRH14							Test Method
	G4	**G5**	**G6**	**G7**	**G8**	**G9**	**G10**	
Grading (sieve analysis)	x	x	x	x	x	x		SANS 3001-GR1 SANS 3001-GR2 SANS 3001-GR3
Moisture Content	x	x	x	x	x	x	x	SANS3001-GR20
Atterberg Limits	x	x	x	x	x	x		SANS 3001-GR10 SANS 3001-GR12
Strength (CBR)	x	x	x	x	x	x	x	SANS 3001-GR40
Swell (CBR)	x	x	x	x	x	x	x	
Flakiness Index	x							SANS 3001-AG4
Durability								
Soundness of Mudrocks and Shales (Venter Test)	x	x	x	x	x	x	x	SANS 3001-AG13
Durability Mill Index	x							SANS 3001-AG16
Soluble Salts								
pH & Electrical conductivity	x	x	x	x	x	x	x	TMH1 A20 & A21T (SANS 3001-GR32)

©Transnet SOC Ltd

Uncontrolled copy when printed

TRANSNET PIPELINES

CIVIL TECHNICAL DOCUMENT

BEDDING AND PADDING SPECIFICATION

Document number	PL 890
Version number	1.0
Effective date	01 May 2024
Review date	01 April 2029

SUMMARY VERSION CONTROL

VERSION NO.	NATURE OF AMENDMENT	PAGE NO.	DATE REVISED
1.0	New Specification		

Note: Only latest amendments and/or additions are reflected in italics in the body of the document.

©Transnet SOC Ltd
Uncontrolled copy when printed

DOCUMENTATION SIGN-OFF SHEET

I, the undersigned hereby approve this specification.

ROLE	CAPACITY/ FUNCTION	Name	SIGNATURE	DATE
Compiled by:	**Senior Engineering Technician: Civil**	S.N Cebekhulu		26 March 2024
Reviewed by:	**Manager: Servitude**	A.M Zulu		12 April 2024
	Accepts document for adequacy and practicability. Comments:			
Approval:	**Principal Engineer: Civil**	M.S Mulaudzi		26 April 2024
	Approves document for use. Comments:			

©Transnet SOC Ltd
Uncontrolled copy when printed

TABLE OF CONTENTS

1. GENERAL 5
1.1. Scope 5
1.2. Related Specifications & Regulation 5
1.3. Definitions 5
2. BEDDING/PADDING MATERIAL 6
2.1. Material Quality 6
2.2. Grading 7
2.3. Testing of Material 7
3. BEDDING AND PADDING BARS 7
4. PADDING 8
5. PIPELINE CONSTRUCTION PADDING MACHINE 8
6. IMPORTED BEDDING AND PADDING 9
7. PADDING SAND 9
8. STANDARD CROSSING CONDITIONS AND REQUIREMENTS 11
8.1. Minor Road Crossings (Road reserve less than 20m) 11
8.2. Major Road Crossings (Road reserve greater than 20m) 11
8.3. Railway Tracks and Canals Crossings 12
8.4. Underground Services (Cables, Pipes, etc.) 12

©Transnet SOC Ltd
Uncontrolled copy when printed

1. GENERAL

1.1. Scope

a) This specification covers the requirements for bedding and padding materials to be placed around and over the pipelines in the trench.

b) The materials shall be compatible with the coatings selected for the pipeline, namely three-layer Polyolefin for the pipeline, the hot applied machine tape wrap applied over FBE or liquid systems for the weld joints, and the cold applied tape wrap over hot bends, fittings, and special installations.

c) This specification sets out the requirements for and restrictions on the use of run-of-trench and imported material.

1.2. Related Specifications & Regulation

a) The following specifications and regulation prescribe items of related Work:
   i. TPL Construction Specification - PL 887.
   ii. TPL Earthwork Specification – PL 889.
   iii. Construction Regulation 2014.

1.3. Definitions

a) Bedding: The material placed on the bottom of the trench after excavation, comprising of sifted material (200 to 300mm depth, varies as specified) prior to placement of the pipeline, or placed in conjunction with sandbags to achieve bedding.

©Transnet SOC Ltd
Uncontrolled copy when printed

b) Padding: The material placed to the sides and above the pipe prior to runoff trench backfill and is inclusive of material otherwise referred to as "shading".

2. BEDDING/PADDING MATERIAL

2.1. Material Quality

a) Screened and suitable excavated material from site or trench that meets this specification, may be utilized for bedding and padding if certified by a TPL Engineer.

b) Material used for Bedding and Padding shall comply with the following:

i. Free of organic matter. Topsoil shall not be used for bedding and padding.

ii. Free of clods or peat.

iii. Free of physical or chemical contamination or hazardous materials including arsenic, cyanide, lead, mercury, selenium, and carbonaceous material such as coke, ash, or breeze.

iv. Material shall be free flowing – non-cohesive: i.e., material which is cohesive shall be excluded for Bedding and Padding purposes.

c) Crusher run is not acceptable. However, site specific materials such as sugar dolerite and sandstone that have been crushed and screened and meet the requirements of this specification may be submitted to the Project Manager and Engineer for approval on a case-by-case basis.

©Transnet SOC Ltd
Uncontrolled copy when printed

2.2. Grading

a) Bedding and Padding shall be sampled for analysis and the source of Material shall contain sufficient fines to provide close packing around the pipe.

b) The diameter of the largest Pad sand particles shall not be greater than 1.5mm.

2.3. Testing of Material

a) Grading tests shall be performed for the following:

i. Each new borrow pit area; and / or

ii. At any time, the source of material is changed.

iii. Samples of bedding / padding material shall be taken twice daily from the trench for testing.

b) The test result shall be subject to the approval of TPL Project Engineer.

3. BEDDING AND PADDING BARS

a) Bedding and Bedding Bars shall be prepared as follows:

i. After preparation of the trench and prior to placement of the pipe, bedding shall be placed in the trench, and care taken to achieve the minimum clearances after settlement of the pipe weight.

ii. Bedding shall provide a minimum of 200mm clearance unless otherwise specified. This may be achieved by use of sandbag bedding bars, continuous bedding, or intermittent bedding prior to lowering-in. Bedding bars or intermittent bedding shall be spaced, at distance not greater than 10m centres.

iii. In rock trench, sandbag bedding bars shall provide a minimum 300mm clearance, including at all projections of rock edges.

©Transnet SOC Ltd
Uncontrolled copy when printed

iv. Bedding bars shall be made of sandbags which consist of Hessian bags filled with bedding compliant material, or polyurethane foam fitters. Bedding bars shall extend the full width of the trench.

4. PADDING

a) After lowering of the pipe into the trench, padding shall be carried out in accordance with this specification and shall be used to cover the pipe to a minimum of 300mm, for the full width of the trench.

b) Padding material shall not impinge directly onto the coated pipe when placed, but instead shall fall onto the trench bed or previously placed material and flow around the pipe.

c) The padding sand shall be placed and compacted in layers until the cover over the pipeline measures 150 mm.

5. PIPELINE CONSTRUCTION PADDING MACHINE

a) A padding machine, stationary screening plant, or mobile screening plant must be utilized to place screened material excavated from the trench as bedding and padding material wherever possible to meet the requirements herein. Samples of screened material from padding machine shall be submitted to a TPL Project Engineer or review and approval.

   i. Material excavated from the trench may be rendered suitable for use as bedding and padding by screening.

   ii. Screening must be carried out at the time of excavation or backfilling. A mobile screening plant may be utilized where appropriate.

©Transnet SOC Ltd
Uncontrolled copy when printed

b) The padding machine shall be operated such that:
   i. The particle size distribution in the layer complies with the maximum particle of 1.5mm.
   ii. Segregation does not occur.

c) When padding is being placed above the pipe, the machine shall be operated so that screened material shall not impinge directly onto the coated pipe. The material should fall onto the trench bed or onto previously placed material and flow around the pipe to comply with the construction specification.

6. IMPORTED BEDDING AND PADDING

a) Imported Bedding and Padding material shall be utilized wherever:
   i. Rock blasting is required.
   ii. Excavated material contains sharp fragments which can damage the pipe coating.
   iii. The TPL Project Engineer deems it necessary.

7. PADDING SAND

a) Padding sand shall be used for the following:
   i. All cathodic protection cable installations.
   ii. Foreign pipeline and cable crossings, including sandbags.
   iii. Valves and fittings, not installed within a chamber.
   iv. All hot bends and specials, (Over-wrapped with cold applied tape).
   v. Liquid Coated or FBE Field Joints, (Over-wrapped with cold applied tape).

b) Padding sand material shall be fine sand or fine non-cohesive soil, free from stone, gravel organics and clod-forming material. Naturally occurring materials

©Transnet SOC Ltd
Uncontrolled copy when printed

including river sand, pit sand and weathered mine dump sand are permissible. Crusher run is not acceptable.

c) The following are some examples of a suitable padding sand:
   i. Plaster Sand
   ii. Washed Umgeni River Sand (KZN)
   iii. Suitable Leached Mine Sand (Gauteng Area)

d) Site specific crushed and screened material such as sandstone and sugar dolerite which meets the requirements of this specification may be submitted to the TPL Project Engineer for approval on a case-by-case basis.

e) Run-of-trench material may be used provided it is screened.

f) Padding sand shall have a Whole Sample Plasticity Index of less than 6.

g) The pH value of the tested sand shall not be less than 5,5.

h) The diameter of the largest pad sand particle shall not be greater than 1,5mm.

i) Sand padding for cables, crossings and cold applied tape-wrapped sections shall have the following grading analysis:

Note: Imported material for padding sand shall be sampled at source and submitted for laboratory analysis for screening and plasticity index and pH value.

©Transnet SOC Ltd
Uncontrolled copy when printed

8. STANDARD CROSSING CONDITIONS AND REQUIREMENTS

8.1. Minor Road Crossings (Road reserve less than 20m)

a) The pipeline shall be exposed for the full width of the road reserve where the road crosses the pipeline servitude and extends to 3m on either side. The pipeline shall then be examined, primed, and double wrapped for this length.

b) The cover over the top of the pipeline shall not be less than 1m nor more than 3m unless otherwise agreed to by TPL Engineer.

c) The excavation and backfilling within the area of the pipeline servitude shall be undertaken by the applicant. Such excavation and backfilling shall be excavated by hand without the use of mechanical or power equipment. The pipeline shall be exposed to provide a minimum clearance of 750mm between the pipeline and the walls and 500mm between the bottom of the pipeline and the floor of the trench. Where exposed the pipeline shall not be left unsupported for length greater than 10m.

d) In backfilling the excavation, the applicant shall provide a minimum of 150mm of selected soft padding around the pipeline where it was exposed in accordance with section 2 and 7 of this specification. The padding must be properly compacted by hand.

8.2. Major Road Crossings (Road reserve greater than 20m)

a) A culvert shall be constructed around the pipeline for the full width of the road reserve where the road crosses the pipeline servitude. The design and construction of the culvert shall be undertaken by the applicant's Registered Engineer and the designs must be submitted to TPL Engineer for approval. Refer to the drawing number, PL – 112876 for typical culvert layout.

©Transnet SOC Ltd
Uncontrolled copy when printed

b) The pipeline shall be double wrapped for the full length of the culvert plus 3m on either side. TPL will supply the prime and wrapping tape and will arrange to examine, prime and double wrap the pipeline where necessary at the applicant's cost.

c) The cover over the top of the pipeline shall not be less than 1m.

d) The excavation and backfilling within the area of the pipeline servitude shall be undertaken by the applicant. Such excavation and backfilling shall be excavated by hand without the use of mechanical or power equipment. Where exposed the pipeline shall not be left unsupported for length greater than 10m.

e) In backfilling the excavation, the applicant shall provide a minimum of 150mm of selected soft padding around the pipeline where it was exposed in accordance with section 2 and 7 of this specification. The padding must be properly compacted in layers by hand.

8.3. Railway Tracks and Canals Crossings

a) Similar to 8.2 procedure – Regardless of the width of the rail reserve and/ or canal, same condition pertains here as that for major roads i.e. a Culvert and double wrapping is required. This may however be relaxed by TPL Engineer in exceptional circumstances.

8.4. Underground Services (Cables, Pipes, etc.)

a) The service shall cross below the pipeline with a minimum clearance of 300mm. The level must be maintained for a minimum distance of 3m on either side of the centerline of the pipeline.

b) Where the service runs parallel to the pipeline it shall not encroach upon Transnet Pipeline servitude.

©Transnet SOC Ltd
Uncontrolled copy when printed

c) No manhole or any other permanent structure shall be erected within the pipeline servitude.

d) No joint in a service shall be situated within the pipeline servitude. Should this, however, not be possible the joint shall be placed such that they are equidistant from the centerline of the pipeline.

e) All fragile services such as PVC pipes, earthenware, pitch fibre pipes and cables laid within the pipeline servitude shall be protected with concrete or similar protective sleeves for s distance of 3m on either side of the centerline of the pipeline.

f) Steel pipes with 100mm diameter or larger two flexible test leads shall be provided by the applicant to enable the monitoring of possible Electrolytic corrosion to Transnet's pipeline. Each test lead shall comprise of a sufficient length of red PVC insulated wire of 35mm^2 section soldered or brazed onto applicant's service and suitable re-insulated. TPL shall provide two black test leads from its pipeline as well as the junction box. All test leads shall terminate inside this junction box. Cost incurred will be to the applicant's account.

©Transnet SOC Ltd
Uncontrolled copy when printed