2,5m MEDUIM EQUIPMENT CABLE BRACKET

M16 x 80mm STAINLESS STEEL THREADED ROD
WELDED BEFORE GALVANISING
2 x STAINLES STEEL NUTS AND WASHERS
PER THREADED ROD
THREADED ROD TO BE WELDED TO THE BACK
OF THE ANGLE IRON

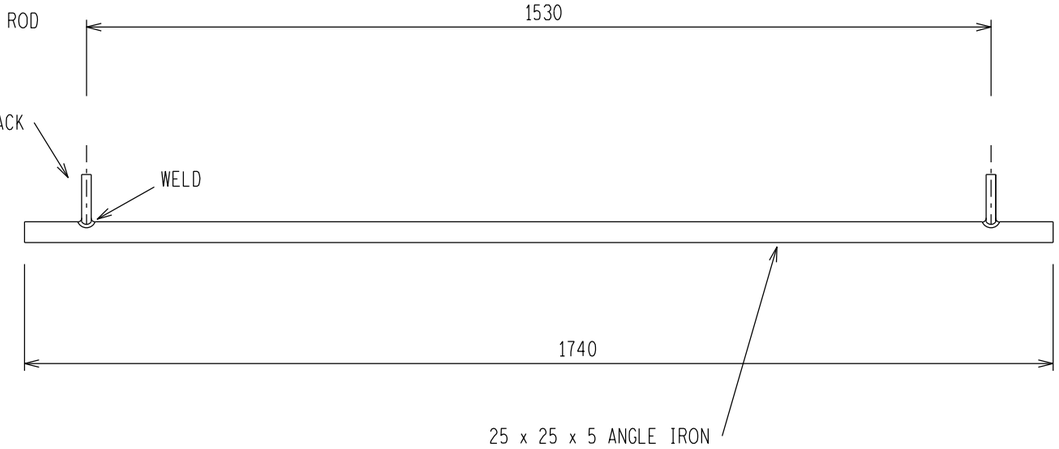

NOTES:

1 - ALL WELDING AND WELDING SYMBOLS SHALL CONFORM TO SABS 044 PART 1 TO PART 5.
2 - ALL WELDS TO BE SEAL WELDED.
3 - ALL BOLTS SECURING BRACKET TO THIS STRUCTURE TO BE SUPPLIED ARE TO BE SUPPLIED BY CONTRACTOR.
4 - BOLTS TO BE SUPPLIED ARE TO BE STAINLESS STEEL BOLTS
5 - ALL BOLTS AND NUTS TO CONFORM TO SABS 135. STRENGHT GRADE 4.6

2m MEDUIM EQUIPMENT CABLE BRACKET

M16 x 80mm STAINLESS STEEL THREADED ROD
WELDED BEFORE GALVANISING
2 x STAINLES STEEL NUTS AND WASHERS
PER THREADED ROD
THREADED ROD TO BE WELDED TO THE BACK
OF THE ANGLE IRON

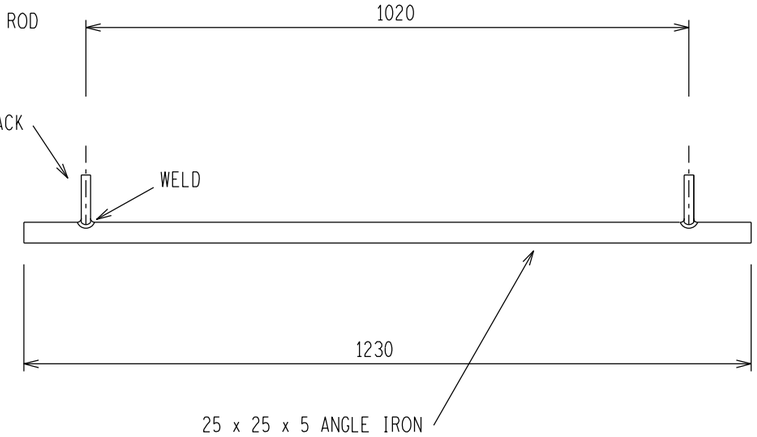

SIDE VIEW

SCALE 1:10

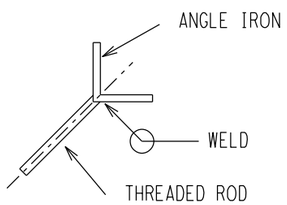

DRG NO.	REFERENCE DRAWINGS:

REV	REVISION DESCRIPTION	BY	CHKD	AUTH	DATE	PROJECT NO.
0	FIRST ISSUE				/ /	

Eskom Distribution

AUTH: N.Webber
DATE: 20/09/2004
CHKD: C. Lottering
DATE: 15/09/2004
DRAWN: A. Madikizela
DATE: 15/09/2004

CABLE SUPPORT
BRACKET MOUNTED ON MEDIUM EQUIPMENT SUPPORT

SET	SHEET	REVISION
	2	0

D-EC-1783

SCALE 1:10

THIS DRAWING IS THE PROPERTY OF ESKOM

A3L