GENERAL NOTES:
1. ALL WORK MUST COMPLY WITH THE BY-LAWS AND SPECIFICATIONS OF THE LOCAL AUTHORITY, NATIONAL BUILDING REGULATIONS, CONSTRUCTION REGULATIONS 2014 AND SANS 1200
2. ALL DIMENSIONS AND LEVELS SHALL BE CHECKED ON SITE BEFORE WORK COMMENCES AND ANY DISCREPANCIES SHOULD BE REPORTED TO THE ENGINEER IN WRITING
3. THE ENGINEER MAY ASSIST THE CONTRACTOR IN STAKING LINES WHERE AFTER THE CONTRACTOR SHALL TAKE OVER ALL SETTING OUT PEGS AND SURVEY BEACONS AND MAINTAIN THEM DURING THE CONSTRUCTION PERIOD

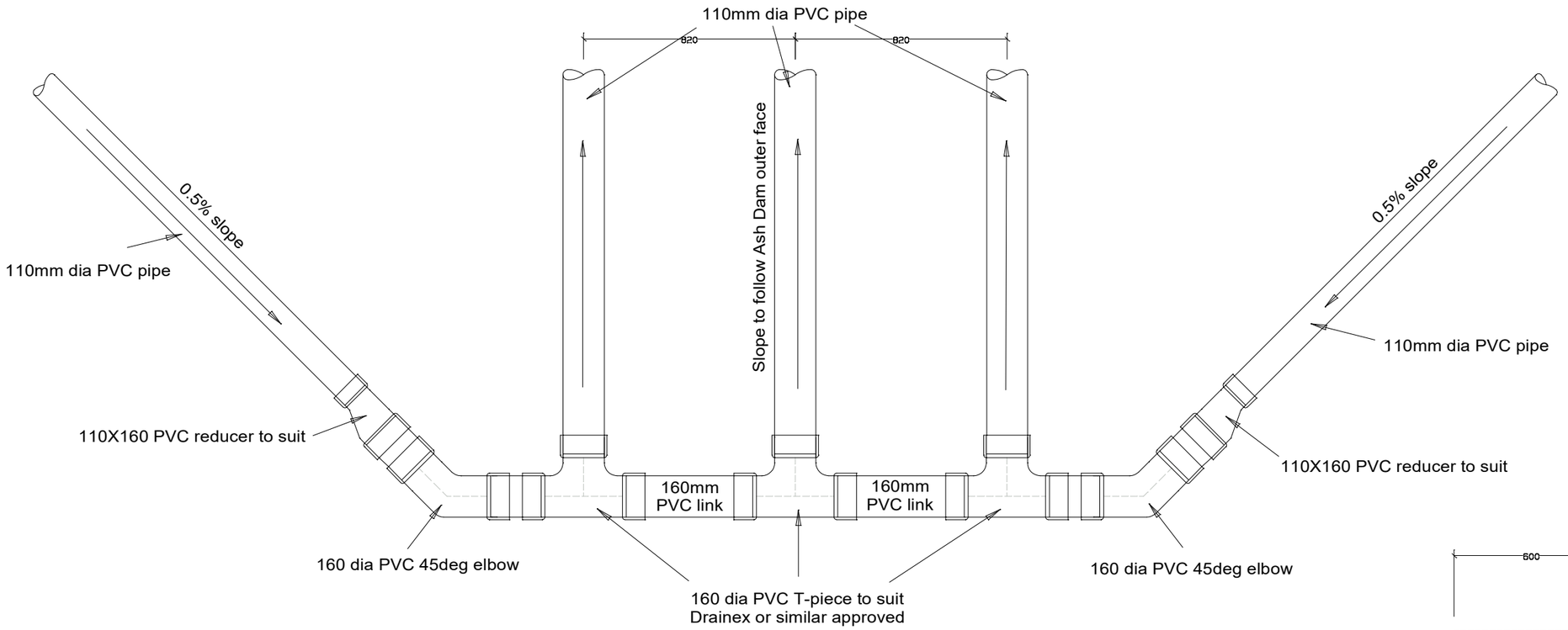

JOINT DETAILS 160mm DIA DRAINEX TO LINK WITH 110mm DIA DRAINEX SIDE COLLECTORS
UPPER BENCH - SCALE 1:20 (A3)

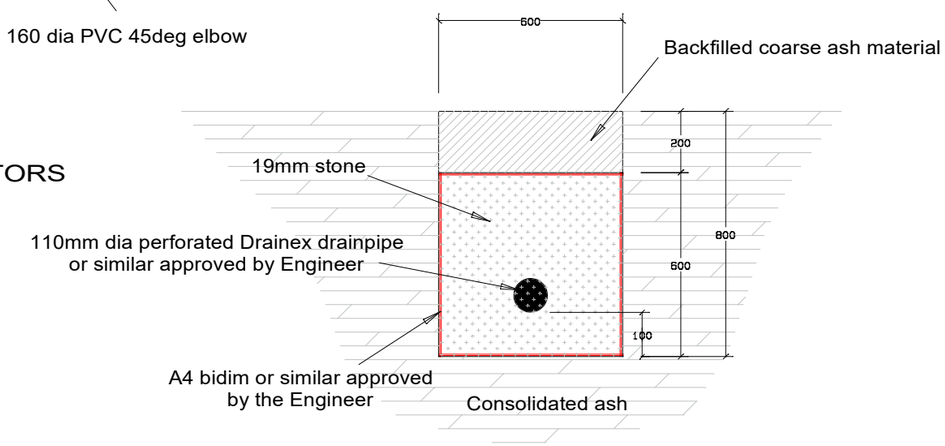

DETAIL SECTION (C-C) - SCALE 1:20 (A3) - SIDE DRAIN COLLECTOR

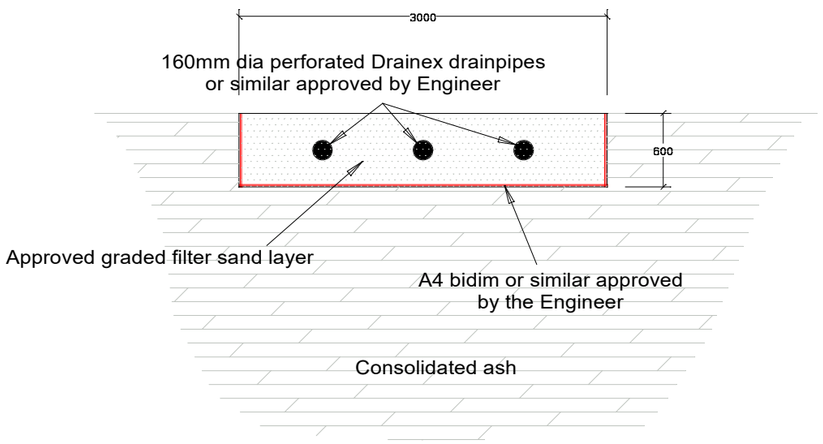

DETAIL SECTION (B-B) - SCALE 1:50 (A3)

D. O.	REV	DATE	REVISION	REV BY	CHKD BY	APP BY	AUTH BY	KKS APP	REFERENCE DRAWINGS
--	--								
--	--								
--	--								

AUTHORISED FOR ESKOM BY:

CODIFICATION BY:

APPROVED BY:
M.F. Joubert Pr Tech Eng
Reg. 201670207

CHECKED BY:

CREATED BY:

SCALE: AS SHOWN

CLASSIFICATION

PBS PATH

Eskom
ESKOM HOLDINGS SOC LTD
REG No 2002/015527/30

ASH DAM ELEVATED DRAINS
ADDITIONAL PIPE INSTALLATION
DETAILS 2 OF 3

CONTRACTOR DRAWING NO
0.57/64409 SHT 02

SHT --
REV --

SIZE A3L

DRAWING CLASSIFICATION: CONTROLLED DISCLOSURE