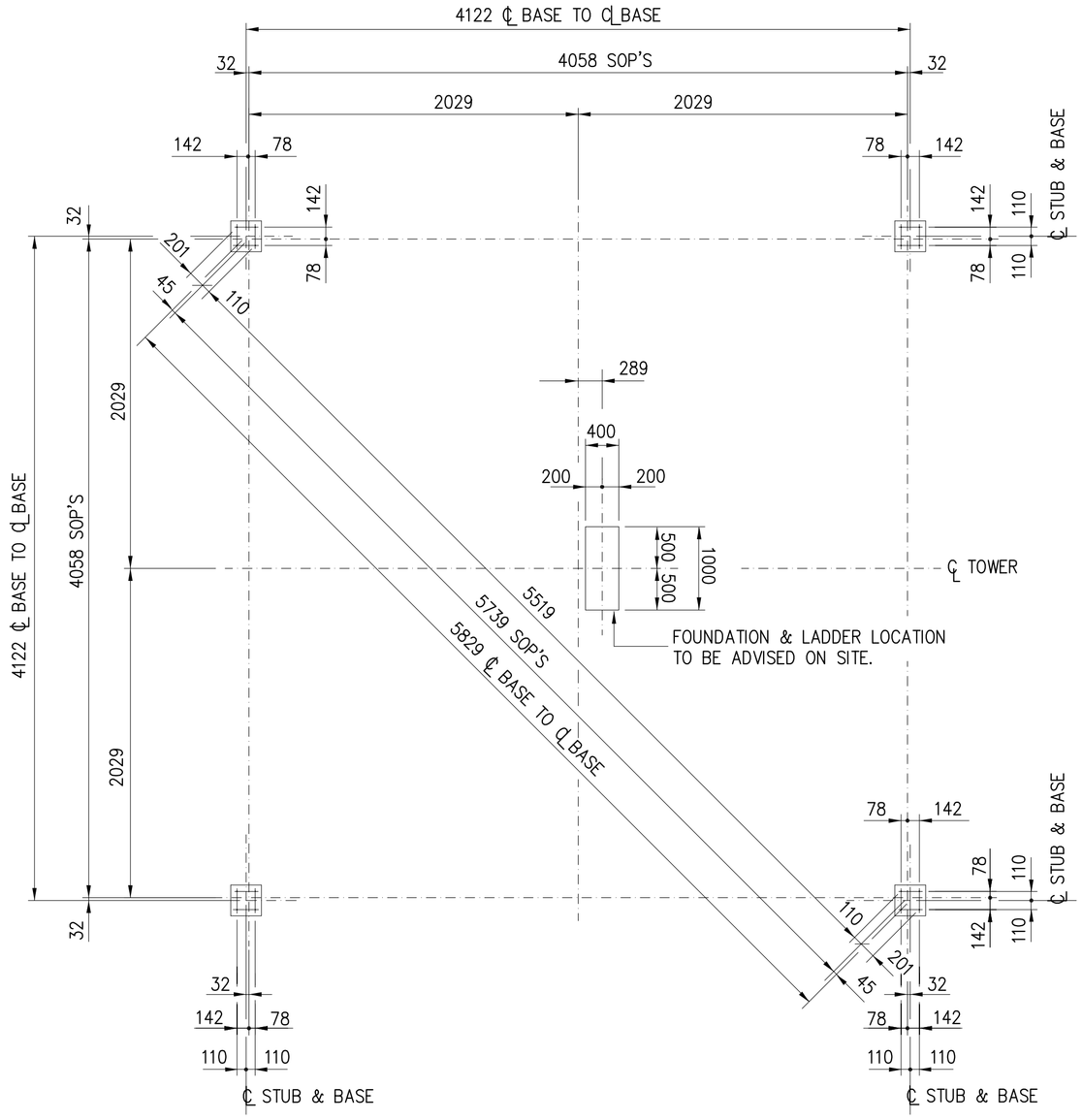

PLAN ON TOWER BASES

1:50

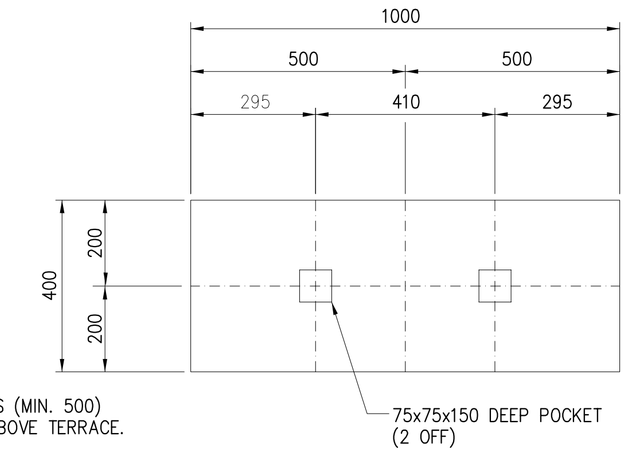

PLAN ON LADDER BASE

1:10

ITEM AND No OFF	Y or R	DIA.	MK.	No OFF PER ITEM	No OFF TOTAL	CUTTING LENGTH mm	TOTAL LENGTH m	SHAPE CODE	A	B	C	D	E	R
4	Y	12	01	50_	200	3050		38_	250_	2600				
	Y	12	02	9__	36_	2000		83_	500_	250_	500_			
	Y	20	03	16_	64_	1600		37_	1350					
	R	08	04	5__	20_	3450		60_	800_	800_				

STANDARD SHAPES BENDING DIMENSIONS mm

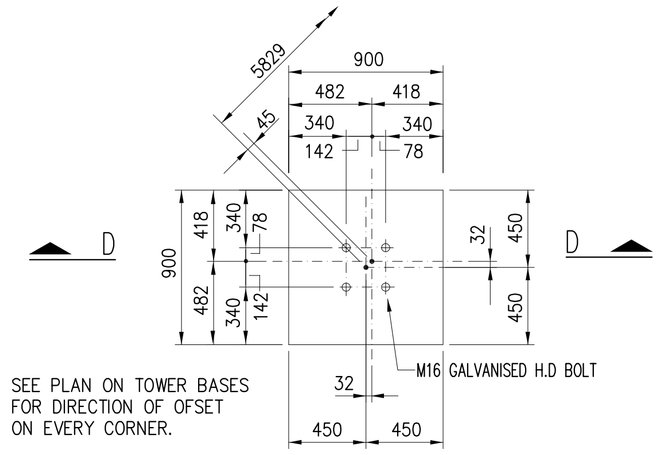

PLAN ON PAD FOUNDATION H.D BOLTS

1:25

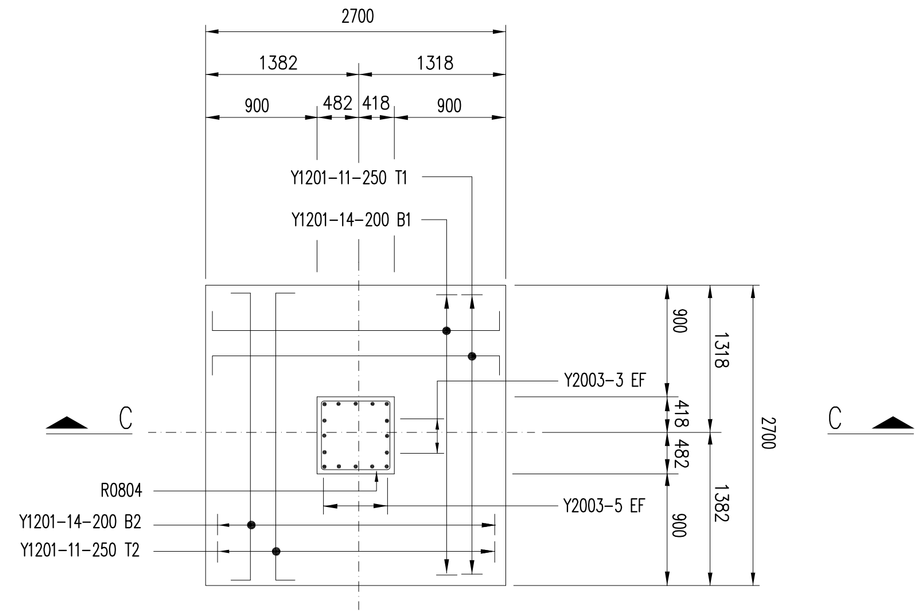

PLAN ON PAD FOUNDATION

1:50

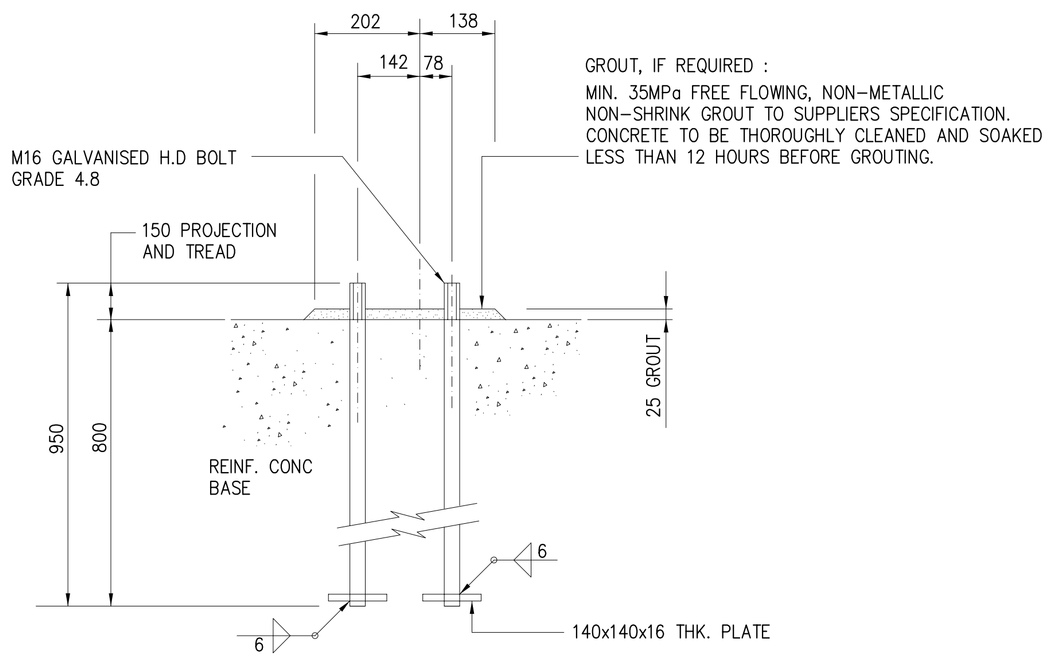

SECTION D-D

DETAIL – H.D BOLTS FOR PAD FOUNDATION

(3,54 kg / BASE)

1:10

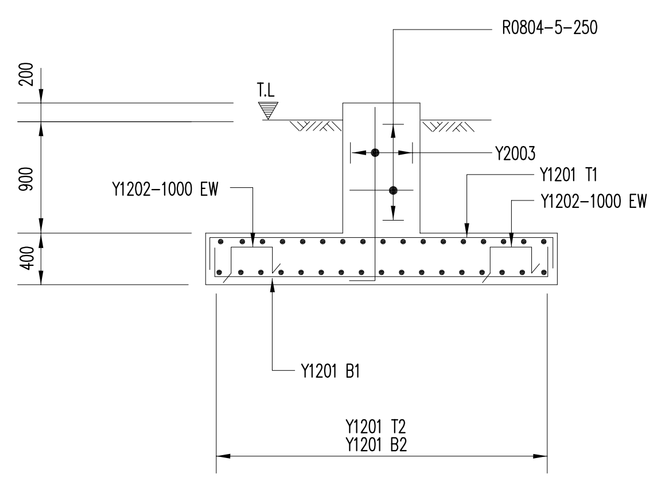

SECTION C-C

1:50

NOTES

1. COVER TO REINFORCEMENT TO BE 50mm.
2. HOLDING DOWN BOLTS TO BE CAST WITH STEEL TEMPLATES.
3. CONCRETE GRADE – 25/19.
4. ALL FOUNDATIONS TO BE INSPECTED BY ESKOM ENGINEER PRIOR TO CASTING OF CONCRETE.
5. T.O.C DENOTES TOP OF CONCRETE.
   T.L DENOTES TERRACE LEVEL.
6. H.D BOLTS: SUPPLIED WITH NUTS AND WASHERS, HOT DIPPED GALVANISED TO SABS 763 AND TO BE CLEARLY MARKED WITH DIAMETER, GRADE & BASE TYPE.
7. ALL CONCRETE EDGES ABOVE TL TO HAVE 20x 20 CHAMFERS.
8. GROUT ONLY TO BE USED WHERE FOUNDATIONS ARE NOT LEVEL.
   PACKER PLATES TO BE HOT DIP GALVANISED.

REV	AUTH MAG	DATE DATUM	REVISION/REVISIES INDEX REF/INDEKSVERW	BY DEUR	CHKD NAGES	REFERENCE DRAWINGS 0.53/2567_VERWYSINGSTEKENINGE
2		06/97	DIMENSIONS ADDED.	A. D.		
1	DJS	10/96	RE-INFORCEMENT, COVER, SECTION D-D REVISED & NOTE 8 ADDED.	A. D.	JJN	
0			FIRST ISSUE / EERSTE UITREIKING		SH2	TOWER GEN. ARRANGEMENT.

DRG.TEK REGISTR

CHKD NAGES

DRAWN GETEKEN — NOV. 1995

SCALE SKAAL — AS_SHOWN

APPROVED

GOEDGEKEUR M._v/d_ENDE.__ 23/11/95

ESKOM

25m_MICROWAVE_TOWER_

CONCRETE_PAD_TYPE_FOUNDATIONS___
LAYOUT_AND_DETAILS_____

0.53/2567 SHEET_1_ REV 2__

PLOT SCALE 1:100_

THIS DRAWING HAS BEEN CREATED ON A C.A.D. SYSTEM AND ANY AMENDMENT TO THE DRAWING MUST BE EFFECTED ONLY ON THE C.A.D. SYSTEM.

SIZE GROOTTE A1L