BABCOCK ENGINEERING CONTRACTORS (PTY) LTD, JOHANNESBURG

		REV	BY	DATE	ALTERATION	AUTH	DATE
DRAWN	80 07 10 N Thereto	A	WT	80 07 28	HOLE IN CLASSIFIER FLANGE WAS 86 Ø		
TRACED		B	WT	80 08 04	TO BE SPECIFICATION		
CHECKED							
AUTH							
SCALE AS SHOWN							

SKETCH No 100/54/22 REV B

MODIFICATION TO CLASSIFIER BLADE ON 12E MILL

CONTRACT NAME | ARRGT DRG No | MANUF D UNDER

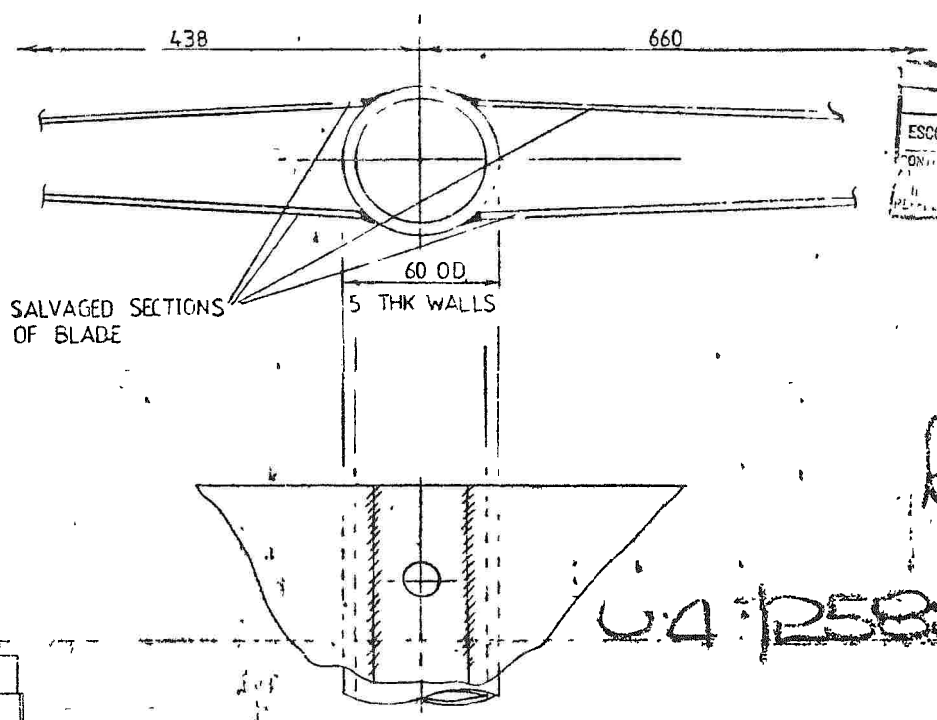

SCALE 1-2

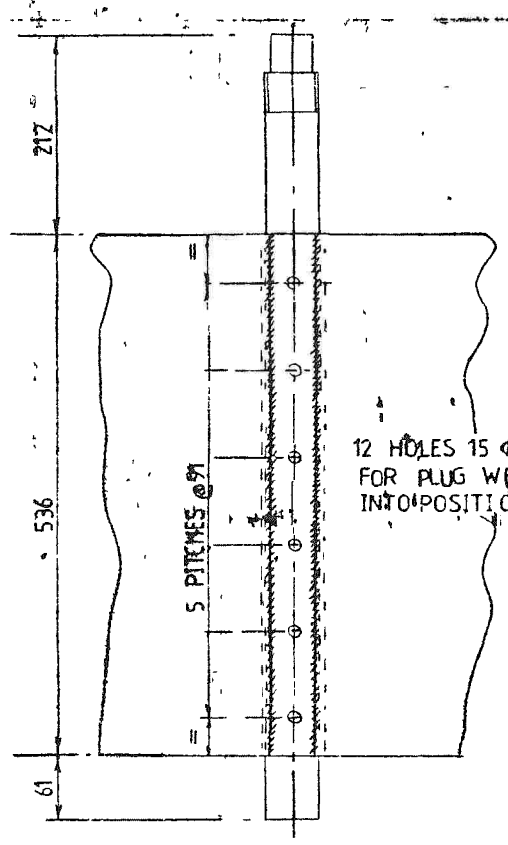

12 HOLES 15 Φ THRO' TUBE FOR PLUG WELDING SPINDLE INTO POSITION

SCALE 1-5

NOTE
THE EXISTING SPINDLE TO BE CUT OUT
THE BLADE SECTIONS ARE TO BE DRESSED AND THEN FULLY WELDED TO 60 O.D. TUBE AS SHOWN TAKING CARE TO AVOID ANY DISTORTION OF THE TUBE *
THE HOLE IN THE CLASSIFIER TOP TO BE OPENED UP TO 110 Φ.
THE HOLE IN THE CLASSIFIER FLANGE TO BE OPENED UP TO 92 Φ
THE BLADE IS TO BE POSITIONED, THEN THE SPINDLE PLUG WELDED INTO POSITION

* TUBE SPECIFICATION ON SK 100/54/21

Kgel PS
12E MILL
ESCO 10-1980
OPL 13265
B24 B2-12
DRAWING TEKENINGLEER

Rv 2

U.A. P5888

Drawn 79/3063 9-79